Magelis iDisplay 15"

User Manual

09/2008

35013918 02

www.schneider-electric.com

Schneider Electric

Table of Contents

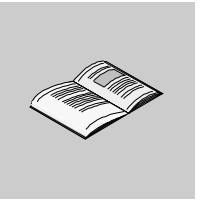

Safety Information 5

About the Book 7

Part I General Overview 9

Chapter 1 Important Information 11

Additional Safety Information 11
Federal Communications Commission Radio Frequency Interference Statement - For U.S.A. 12
Qualified Personnel 13
Safety Warnings for the UK 14
Safety Agency Approval 16
Compliance of Use 17

Chapter 2 Physical Overview 19

Main Features 20
Package contents 21
iDisplay Unit Description 23
Analog RGB and DVI-D Interface Specifications 25
RS-232C and USB Interface Specifications 28
Accessories 31

Chapter 3 Characteristics 33

Structural and Electrical Characteristics 34
Environmental Characteristics 36
Functional Characteristics 37

Chapter 4 Dimensions/Installation 39

Dimensions 40
Creating a Panel Cut for Cabinet Installation 42
Panel Mounting 43
Installing the iDisplay 44

Part II Implementation 51

Chapter 5 Main Power Connection 53
Connecting the AC Power Cord. 54
Connecting the Power supply 57
Connecting the USB Cable 59
Connecting the RGB, DVI-D, and 232C Cable 60
Grounding Cautions. 61
Connecting I/O Signal Lines 64

Part III Installation 65

Chapter 6 Operation Mode Setup and Display Positioning. 67
Dip Switches and Slide Switch Operation 68
Status of Front LED 70
Running the OSD. 71

Chapter 7 Connections 79
Connecting the iDisplay to a PC 80
Touch Panel Data 82

Chapter 8 Touch Panel Communication Program 85
iDisplay Software 85

Chapter 9 Maintenance 87
Regular Cleaning 88
Replacing the Gasket. 90
Maintenance Checks 92

Chapter 10 Troubleshooting. 93
Troubleshooting Checklists 94
Error Message 96

Index 97

Safety Information

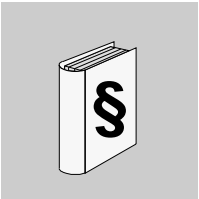

Important Information

NOTICE

Read these instructions carefully, and look at the equipment to become familiar with the device before trying to install, operate, or maintain it. The following special messages may appear throughout this documentation or on the equipment to warn of potential hazards or to call attention to information that clarifies or simplifies a procedure.

The addition of this symbol to a Danger or Warning safety label indicates that an electrical hazard exists, which will result in personal injury if the instructions are not followed.

This is the safety alert symbol. It is used to alert you to potential personal injury hazards. Obey all safety messages that follow this symbol to avoid possible injury or death.

⚠ DANGER

DANGER indicates an imminently hazardous situation, which, if not avoided, **will result** in death or serious injury.

⚠ WARNING

WARNING indicates a potentially hazardous situation, which, if not avoided, **can result** in death, serious injury, or equipment damage.

⚠ CAUTION

CAUTION indicates a potentially hazardous situation, which, if not avoided, **can result** in injury or equipment damage.

PLEASE NOTE

Electrical equipment should be installed, operated, serviced, and maintained only by qualified personnel. No responsibility is assumed by Schneider Electric for any consequences arising out of the use of this material.

© 2007 Schneider Electric. All Rights Reserved.

About the Book

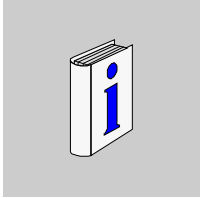

At a Glance

Document Scope

This manual describes the configuration and usage of the Magelis iDisplay 15".

This External Display is designed to operate in an industrial environment and features the very latest technologies.

The Magelis iDiplay 15" is an External LCD Display Monitor

The reference of the product is:

- MPCYT50NAN00N
  - 100...240 VAC
  - 15" SVGA Touch screen
  - 1024 x 768 pixels

Validity Note

Electrical equipment should be installed, operated, serviced and maintained only by qualified personnel. No responsibility is assumed by Schneider Electric for any consequences arising out of the use of this material.

© **Copyright Schneider Electric 2006**. All rights reserved.

General

The present documentation is intended for qualified technical personnel responsible for the implementation, operation and maintenance of the products described. It contains the information necessary for compliance with the proper use of the products. However, those who wish to make more "advanced" use of our products may find it necessary to consult our nearest distributor in order to obtain additional information.

The contents of this documentation are not contractual and in no way constitute an extension to, or restriction of, the contractual warranty clauses.

Registered Trademarks

PL7 and Vijeo Look are registered trademarks of Schneider Electric.

Microsoft® and Windows® are registered trademarks of Microsoft Corporation.

Intel®, Celeron and Pentium® are registered trademarks of Intel Corporation.

IBM® is a registered trademark of International Business Machines Corporation.

Product Related Warnings

⚠ DANGER

HAZARD OF ELECTRIC SHOCK, EXPLOSION OR ARC FLASH

- The mains plug on this equipment must be used to disconnect the mains power.
- Remove all power before removing any covers or elements of the system and installing or removing any hardware and cables.
- Replace and secure all covers or elements of the system before applying power to the unit.
- Always use a properly rated voltage-sensing device to confirm power is off.

Failure to follow this instruction will result in death or serious injury.

⚠ WARNING

LOSS OF CONTROL

- The designer of any control scheme must consider the potential failure modes of control paths and, for certain critical control functions, provide a means to achieve a safe state during and after a path failure. Examples of critical control functions are emergency stop and overtravel stop.
- Separate or redundant control paths must be provided for critical control functions.
- System control paths may include communication links. Consideration must be given to the implications of unanticipated transmission delays or failures of the link. *[1]
- Each implementation of a Magelis iDisplay 15" must be individually and thoroughly tested for proper operation before being put into service.

Failure to follow this instruction can result in death, serious injury, or equipment damage.

*[1] For additional information, refer to *NEMA ICS 1.1* (latest edition), *"Safety Guidelines for the Application, Installation, and Maintenance of Solid State Control"* and to *NEMA ICS 7.1* (latest edition), *"Safety Standards for Construction and Guide for Selection, Installation and Operation of Adjustable-Speed Drive Systems".*

User Comments

We welcome your comments about this document. You can reach us by e-mail at techpub@schneider-electric.com

General Overview

I

At a glance

Overview

This part provides an overview of the iDisplay 15" touch screen monitor.

What's in this Part?

This part contains the following chapters:

Chapter	Chapter Name	Page
1	Important Information	11
2	Physical Overview	19
3	Characteristics	33
4	Dimensions/Installation	39

Important Information

1

Additional Safety Information

General

This chapter describes safety aspects which are specific to the operation of the Magelis iDisplay.

What's in this Chapter?

This chapter contains the following topics:

Topic	Page
Federal Communications Commission Radio Frequency Interference Statement - For U.S.A.	12
Qualified Personnel	13
Safety Warnings for the UK	14
Safety Agency Approval	16
Compliance of Use	17

Federal Communications Commission Radio Frequency Interference Statement - For U.S.A.

Equipment Compliance

This equipment has been tested and found to comply with the limits for a Class A digital device, pursuant to Part 15 of the FCC Rules. These limits are designed to provide reasonable protection against harmful interference in a residential installation. This equipment generates uses, and can radiate radio frequency energy and, if not installed and used in accordance with the instructions, may cause harmful interference to radio communications. However, there is no guarantee that interference will not occur in a particular installation. If this equipment does cause harmful interference to radio or television reception, which can be determined by turning the equipment off and on, the user is encouraged to try to correct the interference by one or more of the following measures:

- Reorient or relocate the receiving antenna.
- Increase the separation between the equipment and receiver.
- Connect the equipment into an outlet on a circuit different from that to which the receiver is connected.
- Consult the Support Service Center or an experienced radio/TV technician for help.

⚠ WARNING

UNINTENDED EQUIPMENT OPERATION

Use only shielded interface cables when connecting to a computer or peripheral.

Failure to follow this instruction can result in death, serious injury, or equipment damage.

Any changes or modifications not expressly approved by the party responsible for compliance could void the user's authority to operate this equipment.

This device complies with Part 15 of the FCC Rules. Operation is subject to the following two conditions:

- This device may not cause harmful interference received, including interference that may cause undesired operation.
- This device must accept any interference received, including interference that may cause unwanted operation.

Qualified Personnel

Safety Aspects

Only qualified personnel are authorized to implement, operate or maintain the products. The interference of non-qualified persons or failure to observe the security instructions contained in this manual, or attached to the devices, can endanger the personnel and/or cause irreparable damage to the equipment. The following personnel can be designated as "qualified personnel":

- at the application design level, engineering department personnel who are familiar with automation safety concepts (for example, a design engineer),
- at the equipment implementation level, personnel who are familiar with the installation, connection and commissioning of automation equipment (for example, an installation assembly or cabling engineer, or a commissioning technician),
- at the operation level, personnel who are experienced in the use and control of automation and computing equipment (for example, an operator),
- as far as preventive or corrective maintenance is concerned, personnel trained and qualified in regulating or repairing automatic and computing devices (for example an operating technician, or an after-sales service technician, etc.).

Safety Warnings for the UK

Earthing and Wiring

⚠ WARNING

UNGROUNDED EQUIPMENT

- This apparatus must be earthed.
- Use a three-pin plug with a standard three-pin power point.
- Use only three-core extension cords.

Failure to follow this instruction can result in death, serious injury, or equipment damage.

Note: The fact that the equipment operates satisfactorily does not imply that the power point is earthed and that the installation is completely safe. For your safety, if you have any doubt about the effective earthing of the power point, consult a qualified electrician.
Incorrectly wired extension cords are a major cause of fatalities.

⚠ WARNING

IMPROPER WIRING

Wire the equipment as described below:

- Green and Yellow: Earth
- Blue: Neutral
- Brown: Live
- The Green and Yellow wire must be connected to the terminal in the plug marked by the letter E or by the safety earth symbols colored Green, or Green and Yellow.
- The blue wire must be connected to the terminal which is marked by the letter N or colored Black.
- The brown wire must be connected to the terminal which is marked with the letter L or colored Red.

Failure to follow this instruction can result in death, serious injury, or equipment damage.

⚠ WARNING

INCOMPATIBLE SYSTEM

Do not connect this equipment to an IT power system:

- An IT system is a system having no direct connections between live parts and Earth; the exposed conductive parts of the electrical installation are earthed.
- An IT system is not permitted where the computer is directly connected to public supply systems in the UK.

Failure to follow this instruction can result in death, serious injury, or equipment damage.

Safety Agency Approval

Standards

The Schneider Electric systems are designed to meet the following standards:

- Underwriters Laboratories Inc., UL 508, Industrial Control Equipment
- Canadian Standards Association, Specification C22.2 No. 142 Process Control Equipment
- IEC 61131-2, programmable controllers.

Compliance of Use

European Directives

The products described in the present documentation comply with the European Directives concerning Electromagnetic Compatibility and Low Voltage (CE marking). However, these can only be used correctly if they are used in applications for which they are specifically intended, as specified in the relevant documentation, and in connection with approved third-party products.

As a general rule, correct usage of the products, with no danger to personnel or hardware, consists of complying with all handling transport, and storage recommendations, and all installation operation, and maintenance instructions.

Physical Overview

2

At a Glance

Overview

This chapter provides a physical overview of the product.

What's in this Chapter?

This chapter contains the following topics:

Topic	Page
Main Features	20
Package contents	21
iDisplay Unit Description	23
Analog RGB and DVI-D Interface Specifications	25
RS-232C and USB Interface Specifications	28
Accessories	31

Main Features

Introduction

The iDisplay is equipped with the following features:

- High Quality TFT Color LCD Display
- Easy Installation In Users' Cabinets and Panels
- Panel can be used as a VGA Display
- Easy-to-use Built-In Touch Panel
- USB-HUB Function

High Quality TFT Color LCD Display

This unit is equipped with a 15.0 inch TFT-type color LCD. Its superior brightness and wide viewing angle, not found in ordinary laptop-type TFT LCDs, widens your scope of applications.

The screen's maximum resolution is 1024 x 768 pixels and can display 16,777,216 colors.

Easy Installation In Users' Cabinets and Panels

The iDisplay's slim and compact design makes installation easy since it was designed specifically for use as an IA (Industrial Automation) or OA (Office Automation) system monitor.

The flat front panel provides protection equivalent to the rigorous IP65f standard. Even without its optional protective cover the front panel is highly resistant to both water and dust.

Panel can be used as a VGA Display

Since the iDisplay is equipped with an analog RGB interface and a DVI-D Interface, it can be connected to a PC and other, similar devices. (The PC's dot clock frequency, however, must be within the standard range.)

Easy-to-use Built-In Touch Panel

iDisplay series built-in touch panel is standard equipment, allowing touch panel data to be output to a host PC via input/output commands and an RS-232C cable or USB cable.

This is perfect for systems requiring both touch panel operation and data monitoring.

USB-HUB Function

The iDisplay unit has USB-HUB function and can connect USB devices to the front USB connector.

Package contents

Introduction

The following items are included in the iDisplay's package. Before using the iDisplay, please make sure that all items listed here are present:

- iDisplay Unit (1)
- CD-ROM (1) (User Manual Touch Panel communication Program)
- Installation Gasket (1)
- Installation Fasteners (8: 4x2 set)
- AC Power Cord EU plug (1)
- AC Power Cord USA plug (1)
- USB Cable Strap (1)
- Instruction sheet (1)
- Analog RGB.VGA Cable (1)
- Touchscreen Interface USB Cable (1)

This unit has been carefully packed with special attention to quality. However, should you find anything damaged or missing, please contact your local iDisplay distributor immediately.

iDisplay Package Contents

The following shows the iDisplay Package Contents:

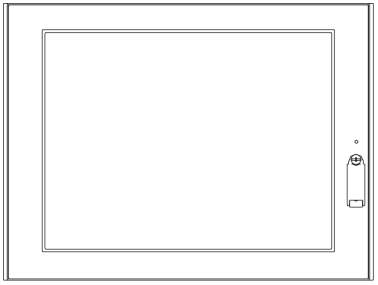

iDisplay Unit

Installation Gasket

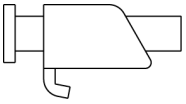

Installation Fasteners

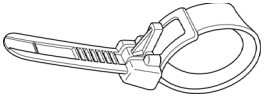

USB Cable Strap

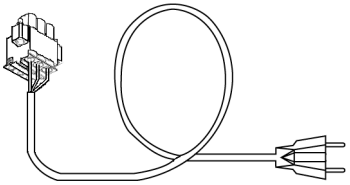

AC Power Cord UE plug

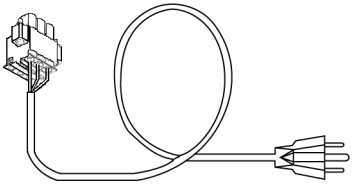

AC Power Cord USA plug

CD-ROM

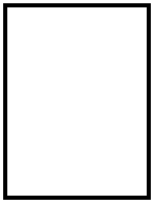

Instruction Sheet

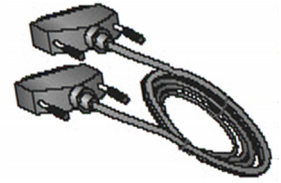

Analog RGB.VGA Cable

Touchscreen Interface USB Cable

iDisplay Unit Description

Introduction

The following diagrams identify the different parts of the iDisplay unit and describe their functions.

Front Side

The following shows the iDisplay's front side:

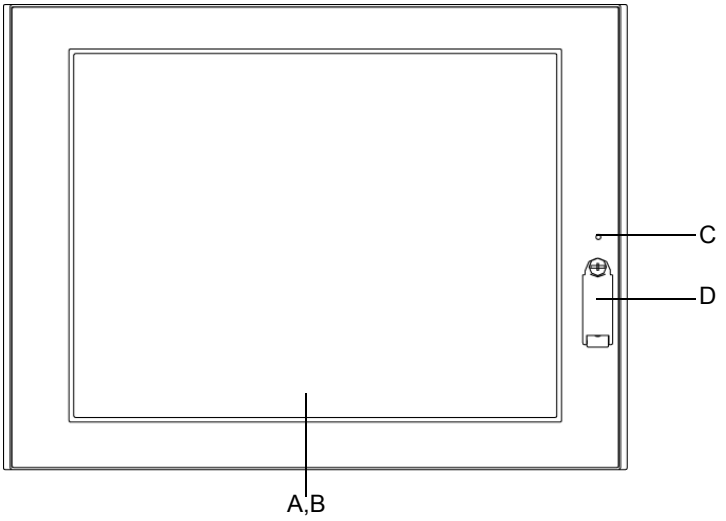

Part	Function
A	Display: displays User created screens
B	Touch Panel: performs screen change operations and sends data to the host (PC).
C	Front LED: indicates the condition of the power supply, a backlight burnout or image signal input.
D	Front USB Connector (Type A): connects USB devices.

Rear and Bottom Side

The following shows the iDisplay's rear and bottom side:

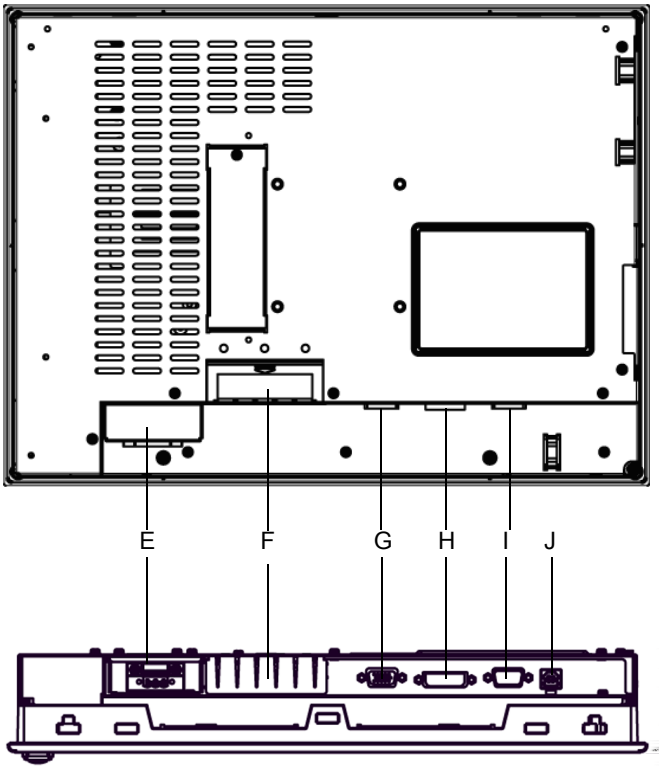

Part	Function
E	AC Connector: provides the input and ground terminals for a power cable.
F	Setting Switch (Dip switch): changes the settings of each operation mode.
G	VGA Interface (analog RGB) Connector: connects analog RGB interface.
H	DVI-D Interface Connector: connects DVI-D interface.
I	RS-232C Connector: connects RS-232C (serial) interface, sends touch panel data to the host (PC), and receives commands from the host (PC).
J	USB Connector (Type B): connects USB interface, sends touch panel data to the host (PC), and receives commands from the host (PC).

Analog RGB and DVI-D Interface Specifications

Analog RGB Interface

The following table displays the Analog RGB signals:

Input signal type	Analog RGB
Input signal characteristic	Image signal: analog RGB Synchronous signal: TTL level, negative true or positive true Scanning type: non-interlaced
Setting via OSD (On Screen Display)	• CONTRAST • BRIGHTNESS • H-POS • V-POS • OSD H-POSITION • PHASE • BACKLIGHT • SHARPNESS • DEFAULT (ALL CLEAR)

The following table displays the Analog RGB Interface pin assignments and signal Names:

Pin Connection	Pin	Signal Name	Direction	Meaning
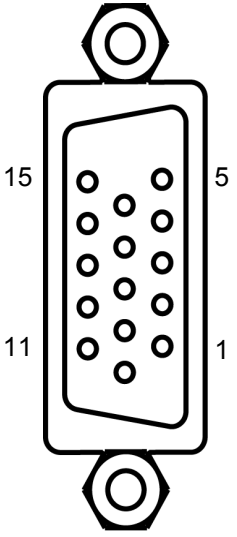	1	R	Input	R Analog signal
	2	G	Input	G Analog signal
	3	B	Input	B analog signal
	4	Reserved	-	-
	5	Ground	-	Digital grounding
	6	Return R	-	R signal GND
	7	Return G	-	G signal GND
	8	Return B	-	B signal GND
	9	Reserved	-	-
	10	Ground	-	Digital grounding
	11	Reserved	-	-
	12	DDC DATA	-	DDC data
	13	H.SYNC	Input	Horizontal synchronous signal
	14	V.SYNC	Input	Vertical synchronous signal
	15	DDC CLOCK	-	DDC clock

Connector: mini D-sub 15pin male

Connector set screw: Inch type (4-40)

Cable: RGB cable included (VGA standard) less than 4.5m (177.16 in.)

⚠ WARNING

UNINTENDED EQUIPMENT OPERATION

- Ensure that no connections to the communication ports on the bottom and sides of the unit are putting excessive stress on the ports.
- Securely attach communication cables to the panel or cabinet.
- Use only specified RGB cables.

An excessive weight or stress on communication cables may cause an equipment's disconnection and unintended equipment operation.

Failure to follow this instruction can result in death, serious injury, or equipment damage.

DVI-D Interface

The following table displays the DVI-D signals:

Input signal type	DVI-D
Setting via OSD (On Screen Display)	• BACKLIGHT • DEFAULT (ALL CLEAR)

The following table displays the Analog RGB Interface pin assignments and signal names:

Pin Connection	Pin	Signal Name	Pin	Signal Name
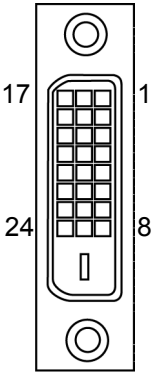	1	TMDS DATA2-	13	NC
	2	TMDS DATA2+	14	NC
	3	TMDS DATA2/4 SHIELD	15	GND (+5V)
	4	NC	16	Hot Plug Detect
	5	NC	17	TMDS DATA0-
	6	DDC Clock	18	TMDS DATA0+
	7	DDC Data	19	TMDS DATA0/5 SHIELD
	8	NC	20	NC
	9	TMDS DATA1-	21	NC
	10	TMDS DATA1+	22	TMDS CLOCK SHIELD
	11	TMDS DATA1/3 SHIELD	23	TMDS CLOCK+
	12	NC	24	TMDS CLOCK-

Connector: DVI-D 24-pin male

Connector set screw: Inch type (4-40)

Cable: DVI-D not included

⚠ WARNING

UNINTENDED EQUIPMENT OPERATION

- Ensure that no connections to the communication ports on the bottom and sides of the unit are putting excessive stress on the ports.
- Securely attach communication cables to the panel or cabinet.
- Use only specified DVI-D cables.

Failure to follow this instruction can result in death, serious injury, or equipment damage.

RS-232C and USB Interface Specifications

RS-232C Interface

The following table displays the RS-232C signals:

Input signal type	RS-232C
Serial Interface	• Baud rate: 9600 bps • Data length: 8 bits • Parity: none • Stop bit: 1

The following table displays the RS-232C Interface pin assignments and signal names:

Pin Connection	Pin	Signal Name	Meaning
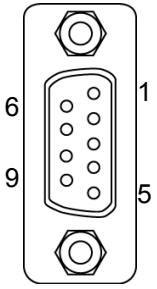	1	CD	Carrier Detect (1)
	2	RD	Receive Data (FP->Host)
	3	SD	Send Data (FP<-Host)
	4	DTR	Data Terminal Ready (1)1
	5	SG	Signal ground
	6	DSR	Data Set Ready (1)
	7	RS	Request to Send (FP<-Host)
	8	CS	Clear to Send (FP->Host)
	9	NC	(Used internally)

(1): CD, DTR, and DSR are connected together inside of the iDisplay.

Connector: D-sub 9 pin male

Connector set screw: Inch type (4-40)

Cable: SIO cable not included

Note: the signal names used for the serial interface on iDisplay units are designed to match the pin order used on most PC serial interfaces, so that a straight cable can be used to connect the two.

⚠ WARNING

UNINTENDED EQUIPMENT OPERATION

- Ensure that no connections to the communication ports on the bottom and sides of the unit are putting excessive stress on the ports.
- Securely attach communication cables to the panel or cabinet.
- Use only specified SIO cables.

An excessive weight or stress on communication cables may cause an equipment's disconnection and unintended equipment operation.

Failure to follow this instruction can result in death, serious injury, or equipment damage.

USB Interface (Up-stream port)

The following table displays the USB Interface (Up-stream port) pin assignments and signal names:

Pin Connection	Pin	Signal Name	Meaning
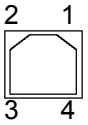	1	USB1-5V	+5VIN
	2	USBD1(-)	USB data (-)
	3	USBD1(+)	USB data (+)
	4	GND	Ground

Connector: USB 2.0/USB 1.1 compliant

Connector set screw: Type B connector

Cable: USB Cable included

⚠ WARNING

UNINTENDED EQUIPMENT OPERATION

- Ensure that no connections to the communication ports on the bottom and sides of the unit are putting excessive stress on the ports.
- Securely attach communication cables to the panel or cabinet.
- Use only specified USB cables.

An excessive weight or stress on communication cables may cause an equipment's disconnection and unintended equipment operation.

Failure to follow this instruction can result in death, serious injury, or equipment damage.

Front USB Interface (Down-stream port)

The following table displays the Front USB Interface (Down-stream port) pin assignments and signal names:

Pin Connection	Pin	Signal Name	Meaning
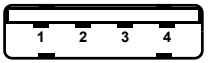	1	USB1-5V	+5VIN
	2	USBD1(-)	USB data (-)
	3	USBD1(+)	USB data (+)
	4	GND	Ground

Connector: USB 2.0/USB 1.1 compliant

Connector set screw: Type A connector

⚠ WARNING

UNINTENDED EQUIPMENT OPERATION

- Ensure that no connections to the communication ports on the bottom and sides of the unit are putting excessive stress on the ports.
- Securely attach communication cables to the panel or cabinet.
- Use only specified USB cables.

An excessive weight or stress on communication cables may cause an equipment's disconnection and unintended equipment operation.

Failure to follow this instruction can result in death, serious injury, or equipment damage.

Accessories

Accessory for IDisplay

The accessory available as option for the iDisplay is shown below:

Description	Reference
Maintenance kit	MPCYK50MNTKIT

Characteristics

3

At a Glance

Introduction

This chapter lists the iDisplay characteristics.

What's in this Chapter?

This chapter contains the following topics:

Topic	Page
Structural and Electrical Characteristics	34
Environmental Characteristics	36
Functional Characteristics	37

Structural and Electrical Characteristics

Structural Characteristics

The following table presents the iDisplay Structural characteristics:

Characteristics	Values
Grounding	≤ 100 Ω or your country's applicable standard
Structure	Rating: Equivalent to IP65f (JEM 1030) *[1]
External dimensions	W395 mm [15.55 in.] x H294 mm [11.57 in.] x D60 mm [2.36 in.]
Weight	Approx. 7 kg [15.43lb]
Cooling Method	Natural air circulation

Note: *[1] The front face of the iDisplay unit, installed in a solid panel, has been tested under conditions equivalent to those shown here. Even though the iDisplay unit's level of resistance is equivalent to these standards, oils that should have no effect on the iDisplay can possibly harm the unit. This can occur in areas where either vaporized oils are present, or where low viscosity cutting oils are allowed to adhere to the unit for long periods of time. If the iDisplay's front face protection sheet becomes peeled off, these conditions can lead to the ingress of oil into the iDisplay and separate protection measures are suggested. Also, if non-approved oils are present, it may cause deformation or corrosion of the front panel's plastic cover. Therefore, prior to installing the iDisplay be sure to confirm the type of conditions that will be present in the iDisplay's operating environment. If the installation gasket is used for a long period of time, or if the unit and its gasket are removed from the panel, the original level of protection cannot be guaranteed. To maintain the original protection level, replace the installation gasket regularly.

Electrical Characteristics

The following table presents the iDisplay Electrical characteristics:

Characteristics	Values
Rated Voltage	100 VAC to 240 VAC
Allowable Voltage	85 VAC to 265 VAC
Rated Frequency	50Hz/60Hz
Rated Frequency Range	40Hz to 72Hz
Allowable Voltage Drop	1 Cycle (max.)
Current Consumption	• 0.75A for 100 VAC • 0.44A for 240 VAC
In-Rush Current	60A (max.)
Voltage Endurance	1500 VAC 20mA for 1 minute (between charging and FG terminals)
Insulation Resistance	500 VDC10MΩ (min.) (between charging and FG terminals)

Environmental Characteristics

Characteristics The following table presents the iDisplay's environment characteristics:

Characteristics	Values
Ambient operating temperature	0°C to +50°C (32°F to 122°F)
Storage temperature	-20°C to + 60°C (-4°F to 140°F)
Operating humidity	10%RH to 90%RH (Non condensing, wet bulb temperature: ≤ 39°C)
Air purity (Dust)	Free of corrosive gasses
Pollution degree	Pollution degree 2
Corrosive gasses	Free of corrosive gasses
Atmospheric endurance	800hPa to 1,114hPa (2,000 meters (6561.6 feet) or lower)
Vibration resistance/Impact resistance	JIS B 3501, IEC61131-2 compliant ● 5Hz to 9Hz Half amplitude 3.5mm, ● 9Hz to 150Hz Constant acceleration 9.8m/s ● X, Y, Z each directions 10 times (100 minutes)
Noise immunity (via noise simulator)	Noise voltage: 1,500Vp-p Pulse duration: 1μ sec. ● Noise voltage: 1,500Vp-p ● Pulse duration: 1μ sec, 500n sec, 50 n sec ● Rise time: 1 n sec
Electrostatic discharge immunity	6kV contact (complies with IEC 61000-4-2 level 3)
Surge resistance	Normal mode: 1 KV/Common Mode: 2KV (complies with IEC 61000-4-2)

Functional Characteristics

Introduction

The Functional characteristics include:

- Performance
- Display

Performance

The following table presents the iDisplay performance:

Items		Characteristics
Graphics		XGA (1024 x 768)
Display Unit		15 inch TFT XGA
Touch Panel I/F	Type	Resistive Film (Analog)
	Resolution	1024 x 1024
	Interface	• Serial Interface (RS-232C) • USB Interface
Video I/F		• Analog RGB Interface • DVI-D Interface

Display

The following table presents the display characteristics:

Characteristics	Values
Size	380 mm (15 in.) (Meas. diagonally)
Type	TFT Active Matrix Color LCD
Resolution	1024(H) 768(V) pixels (1pixel=R+G+B color bits)
Dot Pitch	0.297mm (0.01in.) 0.297mm (0.01in.)
Display Colors	16,777,216 colors (R+G+B color bits each)
Video I/F	• Analog RGB Interface • DVI-D Interface
Brightness Control	Available
Contrast Control	Available (Analog RGB only, when the analog RGB connection is used)
Display Area	H 304.1 mm (11.97 in.) V 228.1 mm (8.98 in.)
Display Modes	640 x 400, 640 x 480, 720 x 400, 800 x 600,1024 x 768
Backlight	CCFL (user replaceable)
Backlight Lifetime	(1) 50,000 hours at an ambient temperature of 25ºC (77°F) (Backlight can be replaced by the user)

Note: (1) 50% decreased brightness indicates the backlight needs to be replaced. This value is only for reference and not a guaranteed value.

Dimensions/Installation

4

At a Glance

Introduction

This chapter presents the iDisplay dimensions and its installation in a panel mounting.

What's in this Chapter?

This chapter contains the following topics:

Topic	Page
Dimensions	40
Creating a Panel Cut for Cabinet Installation	42
Panel Mounting	43
Installing the iDisplay	44

Dimensions

Introduction

The following dimensions are given in millimeters and in inches and apply to all iDisplay units.

External Dimensions

The following diagram shows iDisplay's dimensions:

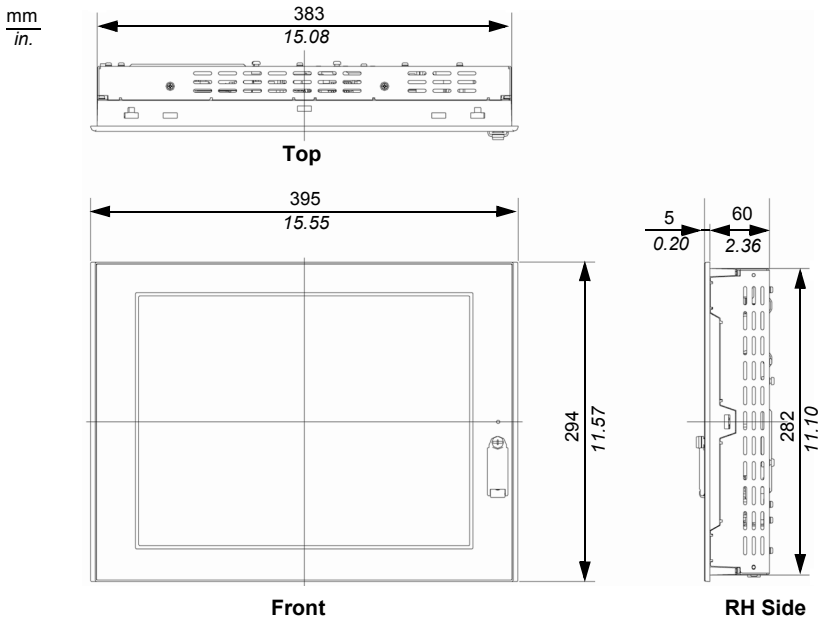

Dimensions with Installation Fasteners

The following diagram shows the dimensions when fasteners are installed:

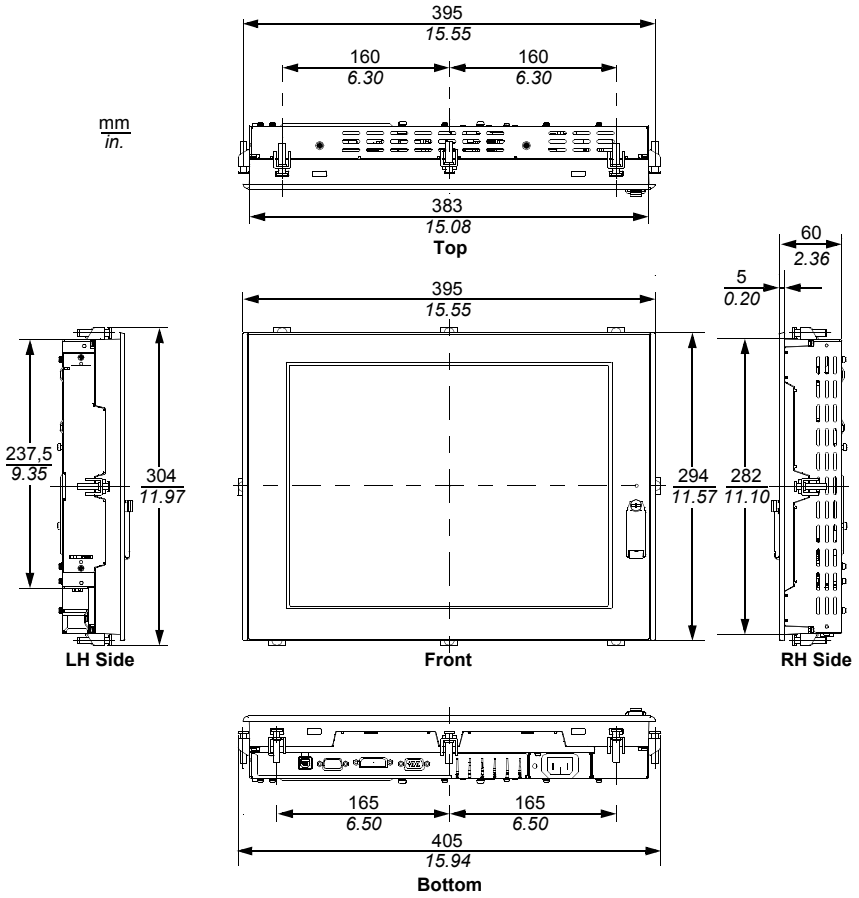

Creating a Panel Cut for Cabinet Installation

Introduction

For a cabinet installation, the correct sized opening must be cut in the installation panel.

Note: The installation gasket and installation fasteners are needed to install the iDisplay.

Inserting a iDisplay

The following diagram shows the panel cut. Dimensions are in millimeters and inches:

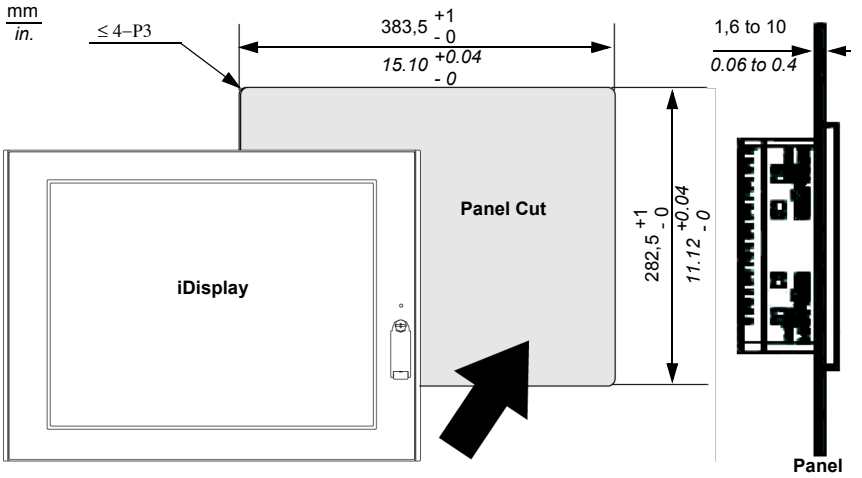

Note:
- Ensure the installation panel thickness is between 1.6 to 10 mm (0.06 to 0.4 in.)
- To ensure that the product's water resistance is maintained, install it into a panel that is flat and free of scratches or dents.
- Ensure all installation tensions are maintained to prevent the unit from falling out of its installation panel.
- Metal reinforcing strips can be attached to the inside of the panel, near the Panel Cut, to increase the panel's strength.

Panel Mounting

Panel Mounting Dimensions

The iDisplay units are designed to be mounted in a cabinet with the Installation Fasteners, as shown below:

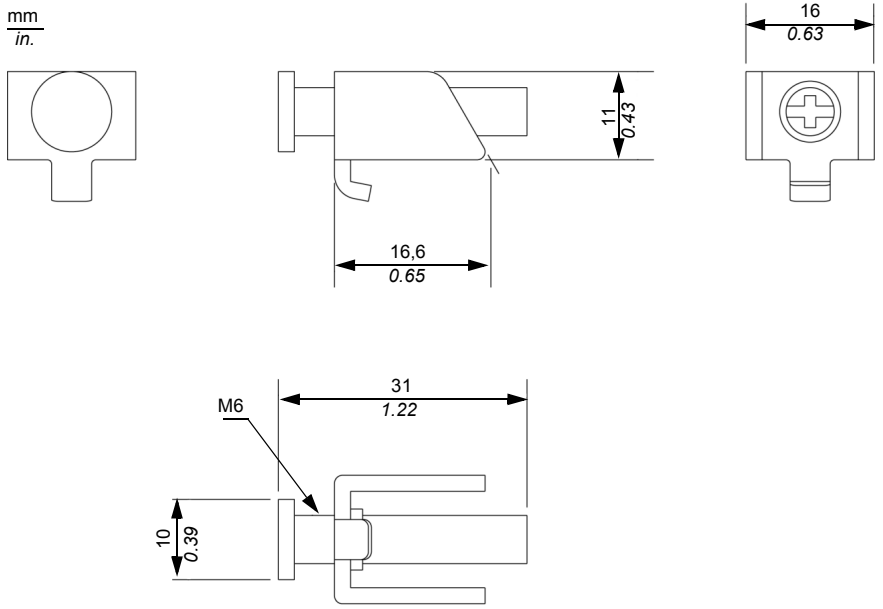

Installing the iDisplay

Installation Location

⚠ CAUTION

EQUIPMENT MALFUNCTION

- Avoid placing the iDisplay next to other devices that might cause overheating.
- Keep the iDisplay away from arc-generating devices such as magnetic switches and non-fused breakers.
- Avoid using the iDisplay in environments where corrosive gases are present.
- To ensure the reliability, operability and ventilation of the iDisplay, be sure to install it in a location that is more than 100 mm (3.94 in.) away from adjacent structures or equipment. Also, take into account the need to install or remove expansion boards or connectors when considering the location and installation of your product.

Failure to follow this instruction can result in injury or equipment damage.

Vibration and Shocks

Extra care should be taken to reduce vibration levels to avoid damaging the iDisplay. For example, if the iDisplay is moved when it is installed in a rack equipped with caster wheels, the unit can suffer excessive vibration or jolting.

Note: Screw installation fasteners are required for NEMA4 protection.

Precaution

⚠ CAUTION

LOSS OF SEAL

The installation gasket that is included with your iDisplay, helps to maintain the protection ratings (IP65, IP20) of the unit, and provides additional protection from vibration. It is strongly recommended that the installation gasket is used, since it absorbs vibration in addition to repelling water.

Failure to follow this instruction can result in injury or equipment damage.

⚠ CAUTION

EXCESSIVE TORQUE HAZARD

Do not exert more than 0.5 Nm (4.42 in-lb.) of torque when tightening the screws. Tightening the screws with excessive force can damage the plastic case.

Failure to follow this instruction can result in injury or equipment damage.

Installation Gasket

The installation gasket plays an important role in the installation of any Magelis iDisplay.

Pay particular attention to the following:

- Before mounting the iDisplay into a cabinet or panel, check that the installation gasket is attached to the unit.
- A gasket that has been used for a long period of time may be scratched or dirty, and may have lost much of its water resistance. Change the gasket at least once a year, or when scratches or dirt become visible.
- The gasket is flexible but not elastic. Do not stretch it unnecessarily, as doing so could tear the gasket.
- When pushing the gasket into the installation groove and around the corners of the unit, ensure that the gasket's seam is not placed in a corner. Placing the seam here could cause the gasket to tear.

Even if the your iDisplay's Installation Gasket is not needed to prevent water from entering the unit, the gasket also acts as a vibration absorber and should always be attached.

Installing the iDisplay

Follow the steps given below when installing the iDisplay:

Step	Action
1	Attaching the Installation Gasket: 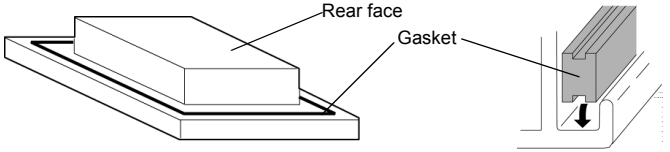
2	The iDisplay's bezel has a part attached to it. To prevent the installation gasket from touching this part, be sure to press the installation gasket completely into its groove. Check that the gasket is correctly attached to the unit. The upper surface of the gasket should protrude evenly approximately 2 mm (0.08 in.) out of the groove: 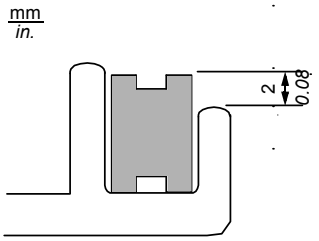
3	Insert the iDisplay into the panel Cut: 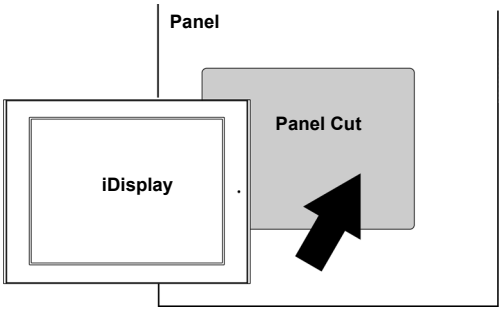

Step	Action
4	Insert each installation fastener securely into the eight slot recesses of the unit: 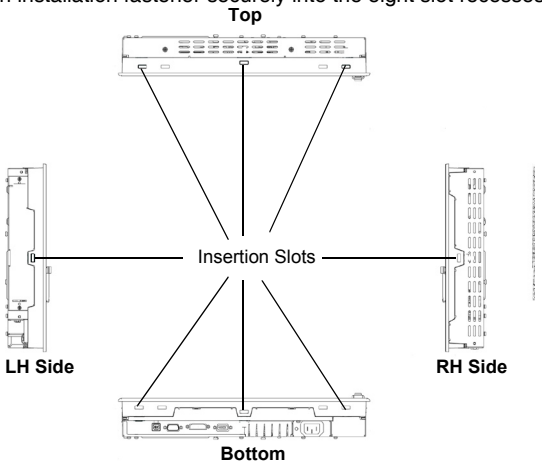
5	Ensure that the panel's viewing angle is tilted no more than 30 degrees from parallel to the operator: 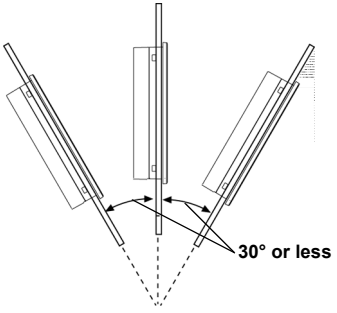
6	Insert each of the fastener: 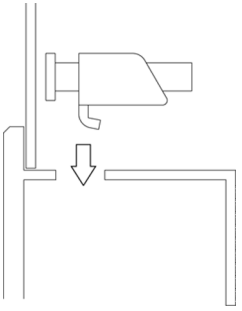

Step	Action
7	Pull each fastener back until it is flush with the rear of the attachment hole: 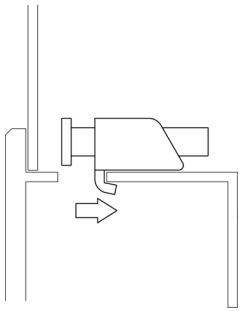
8	Use a screw driver to tighten to 0.5 Nm (4.42 in-lb.) each of the fastener screws and secure the iDisplay in place: 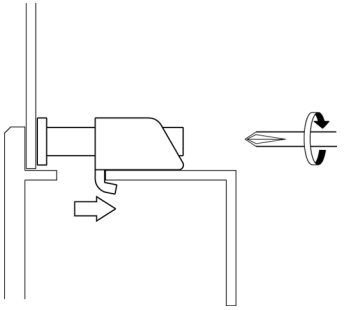

iDisplay Ambient Temperature and Humidity

Take the following precautions:

- Ensure that heat from surrounding equipment does not cause the iDisplay to exceed its standard operating temperature.
- Ensure that the ambient temperature is 0°C (32°F) to 50°C (122°F)
- Ensure that the ambient humidity is 10% to 90%

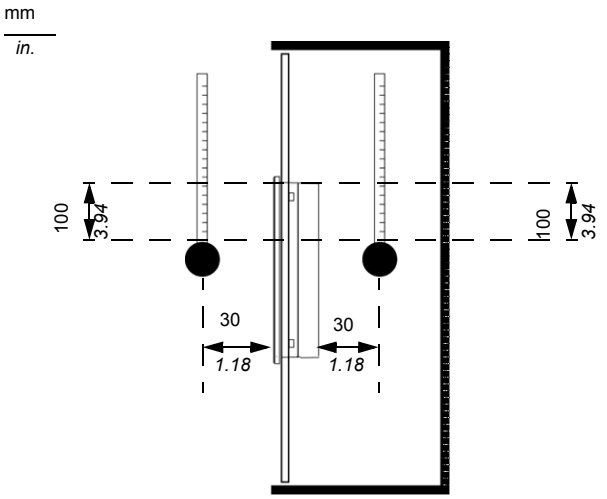

Implementation

II

At a Glance

Introduction

This part describes the implementation of the product.

What's in this Part?

This part contains the following chapters:

Chapter	Chapter Name	Page
5	Main Power Connection	53

Main Power Connection

5

At a Glance

Introduction

This chapter describes the connection of the iDisplay to the mains power supply.

What's in this Chapter?

This chapter contains the following topics:

Topic	Page
Connecting the AC Power Cord	54
Connecting the Power supply	57
Connecting the USB Cable	59
Connecting the RGB, DVI-D, and 232C Cable	60
Grounding Cautions	61
Connecting I/O Signal Lines	64

Connecting the AC Power Cord

Connecting the Terminal Block

Connect the power cord to the terminal block attached to the Magelis iDisplay unit. The terminal block is removable from the Magelis iDisplay iPC unit.

Overview

⚠ DANGER

HAZARD OF ELECTRIC SHOCK, EXPLOSION OR ARC FLASH

To avoid an electric shock prior to connecting the iDisplay's power cord terminals to the power terminal block, ensure that the unit's power supply is completely switched OFF, via a breaker or similar unit.

- The mains plug on this equipment must be used to disconnect the mains power.
- Ensure that only the power plug is removed and not the power connector.
- To avoid the danger of fire, electric hazards and equipment damage, be sure to use only the specified voltage when operating the iDisplay. This unit is designed to use 100...240 VAC input.
- Always use a properly rated voltage sensing device to confirm power is OFF.
- Replace and secure all covers or elements of the system before applying power to the unit.

Failure to follow this instruction will result in death or serious injury.

Note: When the FG terminal is connected, be sure the wire is grounded. Not grounding the Magelis iDisplay unit will result in excess noise and vibration.
When using the strand wire, if the conductor's end is not twisted correctly, the end wires may either short against each other or against an electrode.
The grounding wire should have a cross sectional area of 2 mm (12 AWG) or greater. Create the connection point as close to the iDisplay as possible and keep the wire as short as possible.
To reduce noise be sure to twist the wire ends.
Use copper conductors only. The temperature rating of field installed conductors is 75 °C (167 °F) maximum.

Terminal Block Description

The figure below shows how to wire the Terminal Block:

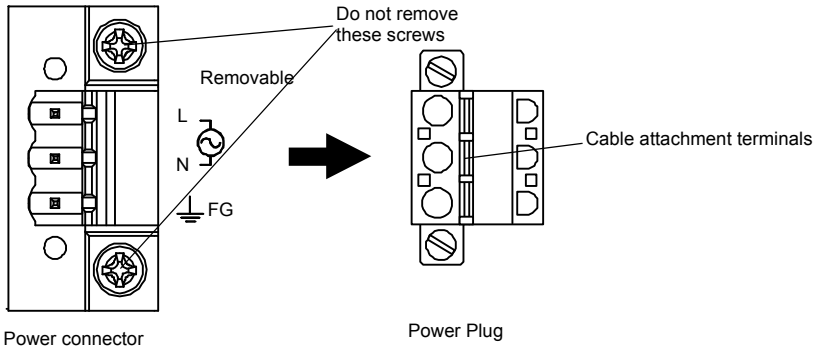

Note: The torque required to tighten these screws is 0.5 to 0.6 N.m (4.42 to 5.3 lbf.in). Do not solder the wire itself.
If the central wire's end strands are not twisted correctly, the end strands may either short against each other, or against an electrode.

Precaution

⚠ DANGER

HAZARD OF ELECTRIC SHOCK, EXPLOSION OR ARC FLASH

To avoid an electric shock, check that the main power supply is turned OFF, via a breaker or similar unit, before connecting the iDisplay's power cord to the AC connector.
To avoid fire, electric hazards and equipment damage, be sure to use only the specified voltage when operating the unit.

Failure to follow this instruction will result in death or serious injury.

Wiring the Terminal Block

When connecting the wires, ensure to follow the procedures given below:

Step	Action
1	Confirm that the power cable is disconnected from the power supply.
2	Check the color of each cable core before connecting it to the attachment hole.
3	Open the cable attachment holes of the terminal plug by pressing the corresponding button on the plastic terminal.
4	Remove the wire's external covering and insert the crimp-type pin terminal of the cable core completely into the opening.
5	Release the pressure on the plastic terminal and the hole is closed and the cable is fixed: 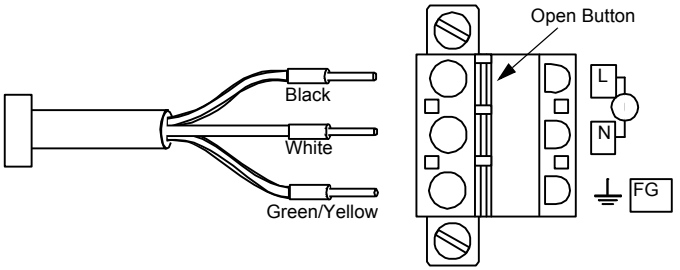

Connecting the Power supply

Introduction

Take the following precautions when supplying power to the iDisplay unit.

Precautions

- Connect the Power Plug to the Power Connector on the side of the iDisplay unit.
- Between the line and the ground, be sure to use a low noise power supply.
- To increase the noise resistance, be sure to twist the ends of the power cord wires before connecting them to the Ring Terminal.
- The iDisplay unit's power supply cord should not be bundled with or kept close to main circuit lines (high voltage, high current), or input/output signal lines.
- Connect a lightning surge absorber to handle power surges.
- To reduce noise, make the power cord as short as possible.

⚠ WARNING

INPROPERLY SECURED POWER CABLES

Securely clamp power supply cables to the installation panel to prevent disconnection due to excessive stress on the connection.
Tighten the unit's terminal block screws to the specified torque.

Failure to follow this instruction can result in death, serious injury, or equipment damage.

Illustration of the Power Supply Connections

The following diagram shows the Power Supply Connections:

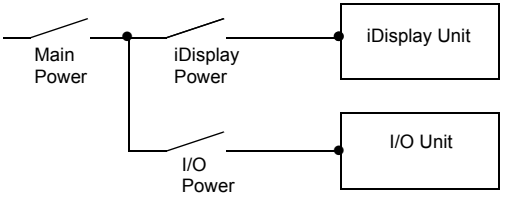

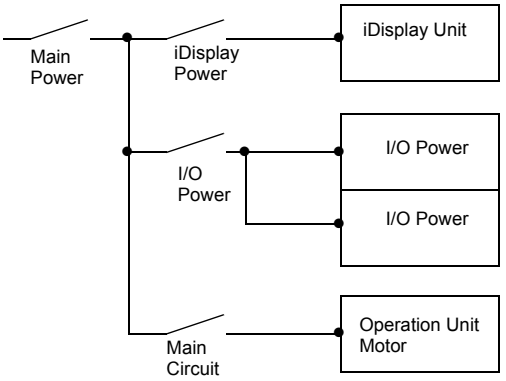

Note:

- Be sure to ground the surge absorber (E1) separately from the iDisplay unit (E2).
- Select a surge absorber that has a maximum circuit voltage greater than that of the peak voltage of the power supply.

The following diagram shows the Lightning Surge Absorber connection:

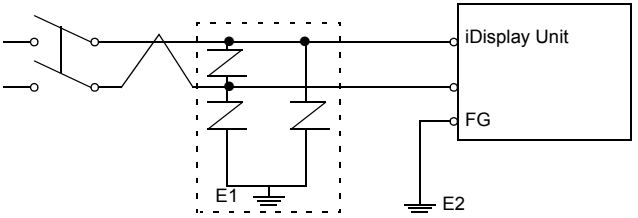

Connecting the USB Cable

USB Cable Strap Attachment

When attaching the USB Cable Strap, be sure to follow the procedures given below:

Step	Action
1	Connect the USB Cable to the connector.
2	Insert the cable strap into the cable strap holder, and tighten the strap until the cable is secured in place. 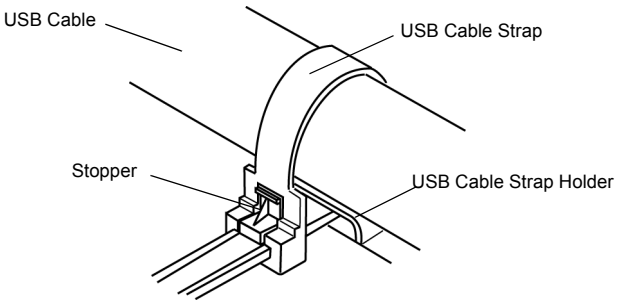

USB Cable Strap Removal Feature

When removing the USB Cable Strap, be sure to follow the procedures given below:

Step	Action
1	Push in the cable strap's stopper until the cable strap band is unlocked, then remove the band.
2	Disconnect the USB cable.

Connecting the RGB, DVI-D, and 232C Cable

Attaching the RGB, DVI-D, and 232C Cable

After connecting the RGB, DVI-D, and 232C Cables, the plug can be safely attached torquing the connection screws.

Grounding Cautions

Overview

Note: When the FG terminal is connected, be sure the wire is grounded. Not grounding the iDisplay unit will result in excess noise and vibration.

When using the strand wire, if the conductor's end is not twisted correctly, the end wires may either short against each other or against an electrode.

When using a long grounding wire, replace the thin wire with a thicker wire and place it in a duct.

The following table display the maximum line lengths for wire thickness:

Wire Thickness	Maximum Line Length
2mm (0.08 in.)	30 m (98.42 ft.)
-	60 m (196.9 ft.) round trip
1.5 mm (0.06 in.)	20 m (65.62 ft.)
	40 m (131.23 ft.) round trip

Precaution

⚠ WARNING

UNINTENDED EQUIPENT OPERATION

Do not use common grounding, which may result in electrostatic damage and unintended equipment operation. Use only the authorized configuration shown below.

Failure to follow this instruction can result in death, serious injury, or equipment damage.

Dedicated Ground

Connect the Frame Ground (FG) to a dedicated ground:

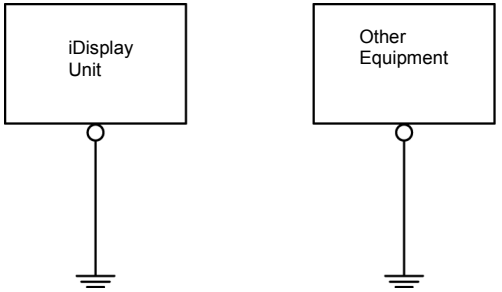

Shared Ground Allowed

If a dedicated ground is not possible, use a shared ground, as shown below:

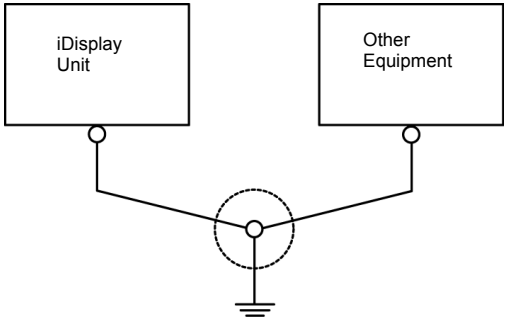

Shared Ground not Allowed

When connecting an external device to a iDisplay with the SG terminal, ensure that no short-circuit loop is created when you set up the system:

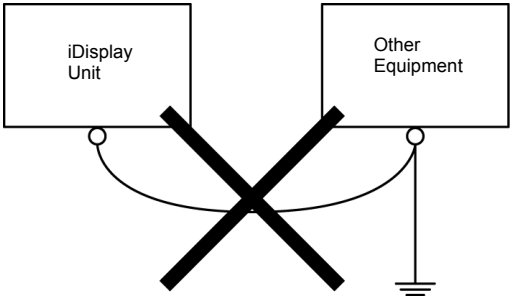

Procedure

When grounding, follow the procedures given below:

Step	Action
1	Check that the grounding resistance is 100 Ω or less.
2	The SG and FG terminals are connected internally in the iDisplay.
3	When connecting the SG line to another device, ensure that the design of the system/ connection does not produce a grounding loop.
4	The grounding wire should have a cross-sectional area of 2mm (0.08 in.) (14 AWG). Create the connection point as close to the iDisplay as possible and make the wire as short as possible. When using a long grounding wire, use a thicker wire and place it in a duct.
5	If the equipment does not function properly when grounded, disconnect the ground wire from the FG terminal.

Connecting I/O Signal Lines

Precautions

I/O signal lines must be wired separately from the power circuit cable. If the power circuit cable needs to be wired with the input/output (I/O) signal lines for any reason, use shielded cables and ground one end of the shield to the iDisplay's Frame Ground terminal.

Installation

III

At a Glance

Introduction

This part describes the product installation.

What's in this Part?

This part contains the following chapters:

Chapter	Chapter Name	Page
6	Operation Mode Setup and Display Positioning	67
7	Connections	79
8	Touch Panel Communication Program	85
9	Maintenance	87
10	Troubleshooting	93

Operation Mode Setup and Display Positioning

6

At a Glance

Introduction

This chapter describes the Operation Mode Setup and Display Positioning.

What's in this Chapter?

This chapter contains the following topics:

Topic	Page
Dip Switches and Slide Switch Operation	68
Status of Front LED	70
Running the OSD	71

Dip Switches and Slide Switch Operation

Introduction

The Dip Switches and the Slide switch are located in the bottom of the iDisplay unit. They can only be used when the power supply is ON.

Note: After changing the settings of the Dip Switches and the Slide Switch, be sure to restart the iDisplay.

The following figure shows the location of the Dip and Slide Switches:

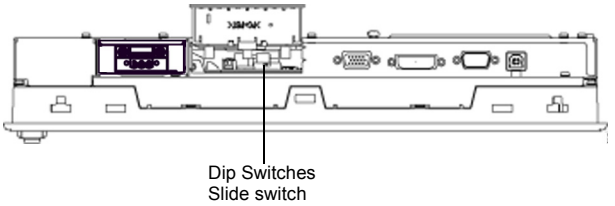

Dip Switches Operation

The following figure shows the location of the Dip and Slide Switches:

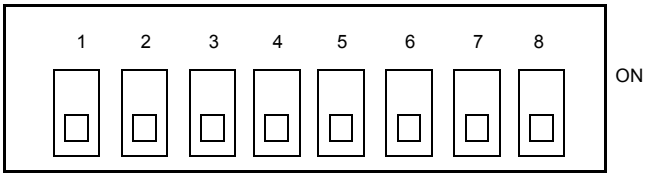

The following table describes each Dip Switch:

Item	Dip Switch	Description
1	SW1-1	Reserved (Always OFF)
2	SW1-2	Display/hide the OSD (On Screen display)
3	SW1-3	Reserved (Set this switch to OFF)
4	SW1-4	Reserved (Set this switch to OFF)
5	SW1-5	Reserved (Set this switch to OFF)
6	SW1-6	Reserved (Set this switch to OFF)
7	SW1-7	Reserved (Set this switch to OFF)
8	SW1-8	Reserved (Set this switch to OFF)

SW1-2:

- Switch ON: to hide the OSD (On Screen Display)
- Switch OFF: to display the OSD

The default setting is OFF.

Slide Switch Operation

The slide switch is used to switch data input (command control) method on the touch panel between USB and RS-232C.

The default setting is RS-232C.

The following figure illustrates the Slide Switch:

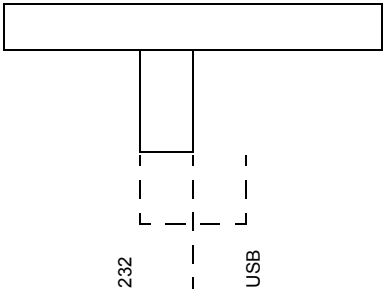

Status of Front LED

Status of Front LED in Operation Modes

The following table describes the status of Front LED:

LED	OFF	Green	Orange	Green/Red Flash	Orange Flash
Panel	Power OFF	Power ON	Power ON	Power ON	Power ON
Backlight	-	Normal	Normal	Burned-out	Burned-out
Input of Image	-	Yes	No	Yes	No

Running the OSD

Title of Overview Block

You can operate the iDisplay screen menus via the touch panel and adjust the screen image display to a minute level. This feature is called OSD (On Screen Display).

Starting the OSD

The following figure shows how to start the OSD:

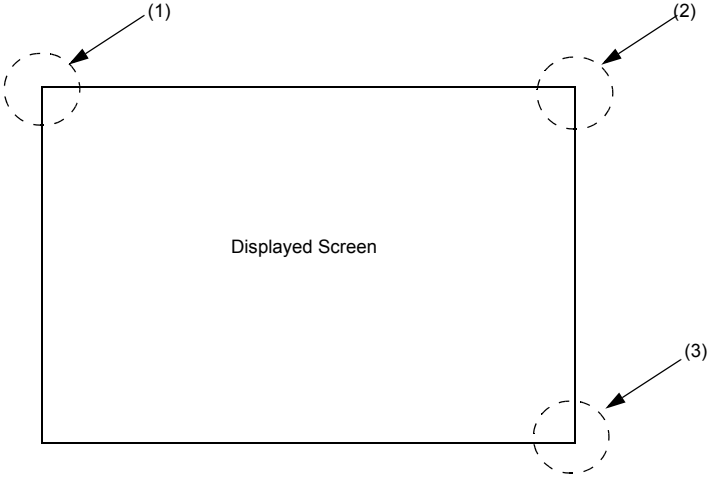

To start the OSD and enter OSD mode:

Press the three corners of the touch panel in the following order within 5 seconds:

- (1) upper left
- (2) upper right
- (3) lower right

In OSD mode, the setting screen is displayed in the center of the screen. In this mode, the touch panel cannot be used to export data to external devices unless the settings for the OSD are completed.

Note: The OSD is not displayed when a switch SW1-2 is ON.

Main Menu

The following figure shows the Main Menu:

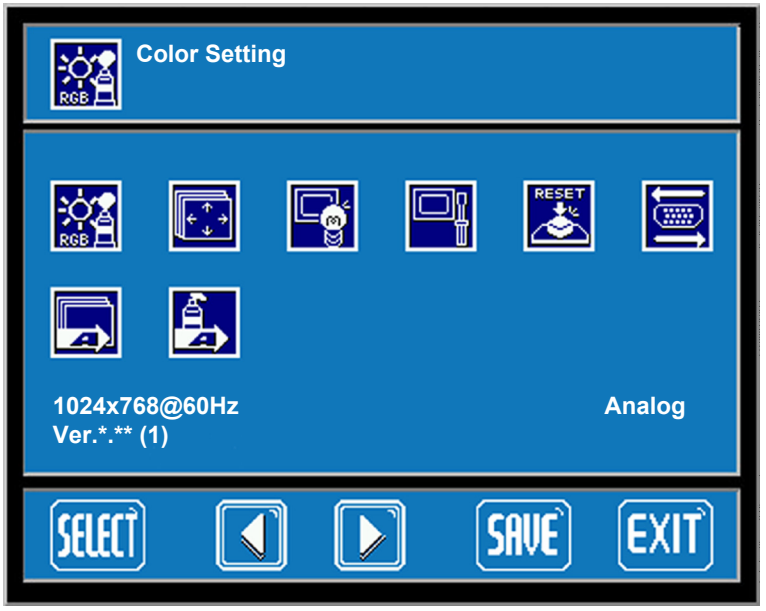

(1) Ver.*.**: indicates the version of the OSD

Using the OSD

When the OSD is started, the Main Menu appears. Touch the icon of an item to display its submenu or settings change screen:

- Use the icon to change the setting
- Press the SET button to apply the setting
- Press the SAVE button to save the defined settings

Exiting the OSD

Press the EXIT button or leave the OSD as it is at least 30 seconds.

If the OSD is automatically closed after 30 seconds of inactivity, the values set before the OSD was closed will be applied.

The Tools used The following table describes Tool functions:

Icon	Tool	Function
	Color setting	Adjusts the contrast and the brightness
	Screen setting	Adjusts the display position of the screen (Analog RGB only).
	Custom display	Adjusts sharpness and the backlight brightness.
	System settings	Changes settings, such as activating the click sound.
	All reset	Resets the current OSD value to the default value.
	Input source	Switches Analog RGB and DV1-D.
	Auto adjust	Automatically adjusts the display position of the screen (Analog RGB only).
	Auto gain	Automatically adjusts the contrast and the brightness (Analog RGB only).
	ESC	Cancels the setting and returns to the upper level.
	SET	Applies the setting and returns to the upper level.
	Arrow KEY	Changes the selection.

Icon	Tool	Function
	SELECT	Selects.
	SAVE	Saves the current value and exits the OSD.
	EXIT	Cancels the current value and exits the OSD.

IDisplay Menu

The following figure illustrates the iDisplay menu structure:

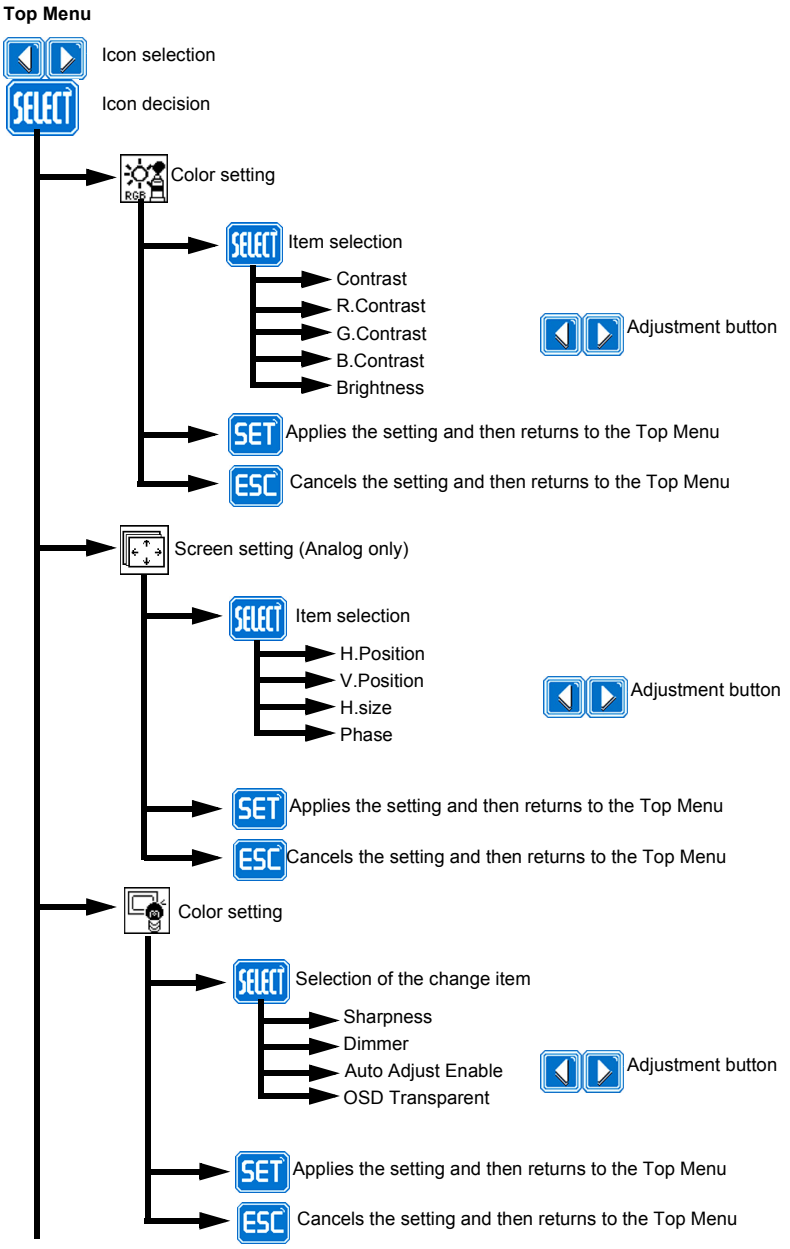

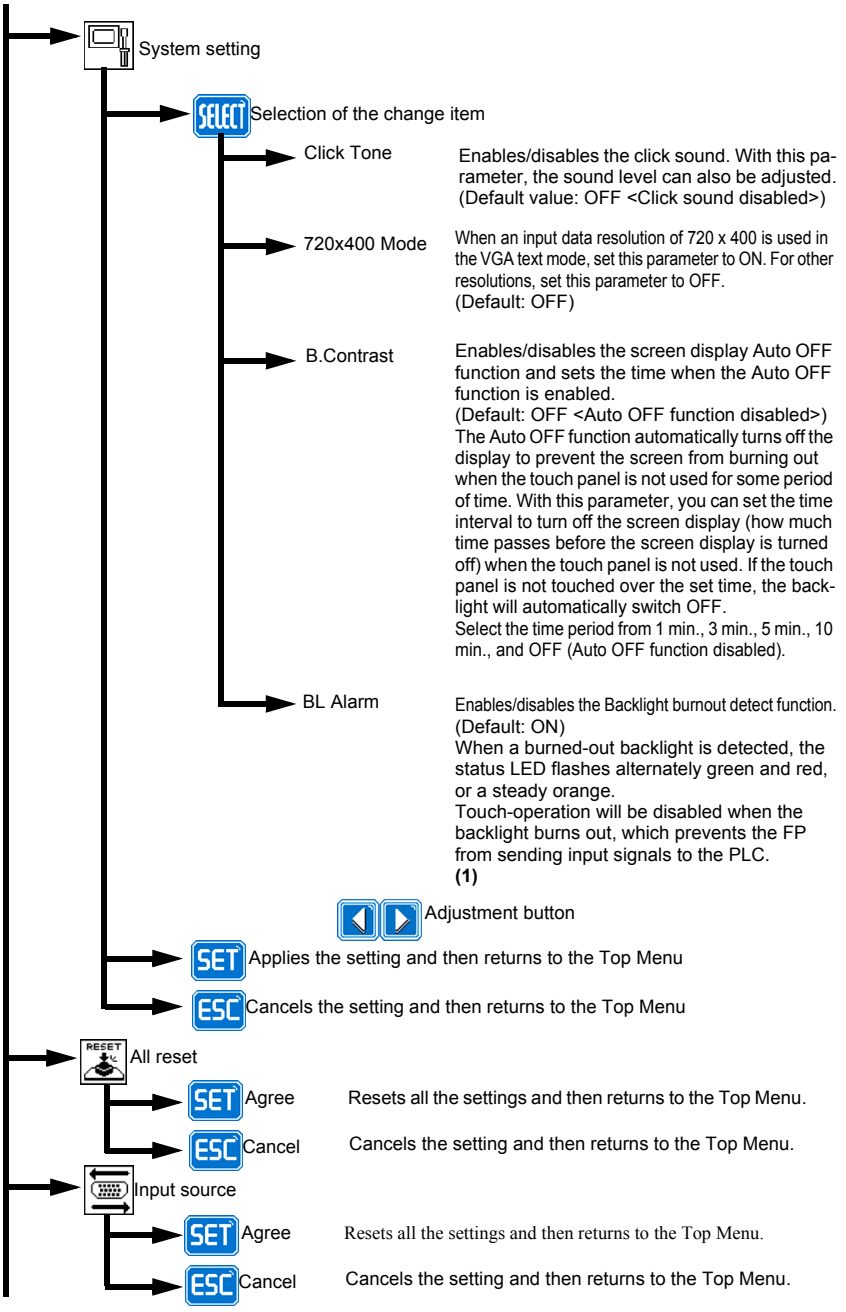
System setting
SELECT
Selection of the change item
Click Tone
Enables/disables the click sound. With this parameter, the sound level can also be adjusted. (Default value: OFF <Click sound disabled>)
720x400 Mode
When an input data resolution of 720 x 400 is used in the VGA text mode, set this parameter to ON. For other resolutions, set this parameter to OFF. (Default: OFF)
B.Contrast
Enables/disables the screen display Auto OFF function and sets the time when the Auto OFF function is enabled. (Default: OFF <Auto OFF function disabled>) The Auto OFF function automatically turns off the display to prevent the screen from burning out when the touch panel is not used for some period of time. With this parameter, you can set the time interval to turn off the screen display (how much time passes before the screen display is turned off) when the touch panel is not used. If the touch panel is not touched over the set time, the backlight will automatically switch OFF. Select the time period from 1 min., 3 min., 5 min., 10 min., and OFF (Auto OFF function disabled).
BL Alarm
Enables/disables the Backlight burnout detect function. (Default: ON) When a burned-out backlight is detected, the status LED flashes alternately green and red, or a steady orange. Touch-operation will be disabled when the backlight burns out, which prevents the FP from sending input signals to the PLC. (1)
Adjustment button
SET
Applies the setting and then returns to the Top Menu
ESC
Cancels the setting and then returns to the Top Menu
RESET
All reset
SET
Agree
Resets all the settings and then returns to the Top Menu.
ESC
Cancel
Cancels the setting and then returns to the Top Menu.
Input source
SET
Agree
Resets all the settings and then returns to the Top Menu.
ESC
Cancel
Cancels the setting and then returns to the Top Menu.

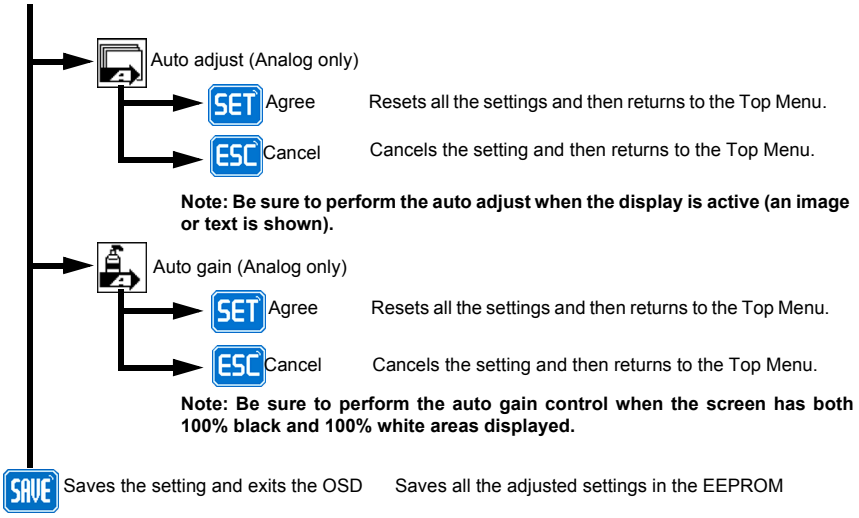

End of OSD

- In the OSD, pressing the **SET** button applies the set value and enables the setting. The set value won't be canceled unless the power is turned OFF or the value is reset.
  If the power is turned OFF without saving the set value, that data will disappear. The last saved data will be read into the system when the FP starts. To enable the changed value, be sure to press the SAVE button.

- When the OSD automatically closes after 30 seconds of inactivity, the set value that you were modifying at the time will be retained. The value that you were modifying will not be retained If you quit the OSD with the **EXIT** button. Instead, the previously set value will be used.

Note: (1) The iDisplay unit detects a backlight burnout by monitoring the backlight's current flow. However, the iDisplay may fail to detect this condition, depending on the type of backlight problem.

Connections

7

At a Glance

Introduction

This chapter presents the iDisplay Connections to a PC and the Touch Panel Data.

What's in this Chapter?

This chapter contains the following topics:

Topic	Page
Connecting the iDisplay to a PC	80
Touch Panel Data	82

Connecting the iDisplay to a PC

Connecting

The iDisplay unit is designed for standard VGA mode.

The following table presents the number of pixels displayed:

Size	H.Sync. (kHz)	V.Sync. (Hz)	Dot Clock (MHz)	Screen Resolution Expansion (H: Horizontal) (V: Vertical)	Display Resolution
640 x 400	24.827	56.000	21.053	H: x 1.6 V: x 1.92	1024 x 767
640 x 400	31.469	70.000	25.175		
640 x 480	31.469	59.992	25.175	H/V: x 1.6	1024 x 768
640 x 480	37.500	75.000	31.500		
640 x 480	35.000	66.667	30.240		
720 x 400 *1	31.469	70.000	28.320	H: x 1.42 V: x 1.92	1023 x 767
800 x 600	37.879	60.317	40.000	H/V: x 1.28	1024 x 768
800 x 600	46.875	75.000	49.500		
1024 x 768	48.363	60.004	65.000	H/V: x 1.0	1024 x 768
1024 x 768	56.476	70.069	75.000		
1024 x 768	60.023	75.029	78.750		

Note: *1When you use the 720 x 400 size, select "420 x 400 Display Resolution 720 x 420 DSP" in the OSD (On screen display) system setting.

Note:
- If you enter a signal timing value not compatible with this device, or if the timing value is larger than can be displayed by the dot clock, an "OUT OF RANGE" message is displayed. If this occurs, be sure to read your computer's manual and enter a value that is compatible with this device.
- If you do not enter a signal (synchronized signal), a "NO SIGNAL" message is displayed.

Magelis iDisplay and PC's VGA board:

- Some types of VGA boards may not be within the ranges specified above, and, therefore, cannot be connected to the iDisplay.
- Also, if you change your PC's VGA board, it is possible that the new board cannot be connected to the iDisplay.

Magelis iDisplay and Modular IPC:

When targeting dual display configurations (Magelis iPC Front Panel + Magelis iDisplay), some particular configurations are not supported.

Configurations:

Modular iPC	connected to its	iPC Front Panel 12"
• MPCA... iPC Control Box Small or • MPCB... iPC Control Box Medium or • MPCC... iPC Control Box Large	connected to	• MPCNA20... iPC Front Panel 12" KBD or • MPCNB20... iPC Front Panel 12" KBDTS or • MPCNT20... iPC Front Panel 12" TS

For these configurations, connection of additional Magelis iDisplay on VGA port of Modular iPC Control Box is not supported.

Touch Panel Data

Introduction

The iDisplay uses an analog type touch panel, and can therefore detect all 1024x768 coordinates.

The resolution of the analog touch panel is 1024x1024, so a conversion program to convert the coordinates to 1024x768 is required. A calibration program can be used to adjust the touch position.

OS and touch Panel Driver Combinations

The following table lists the OS and Touch Panel Combinations:

OS	Touch I/F Program	Calibration
For Windows®95, "OSR2" or newer ver. is supported.	PL-TD000	Feature included in the touch I/F program.
For Windows®98, "SE" or newer ver. is supported.		
For Windows®NT4.0, "SP1" or newer ver. is supported.		
Windows®2000		
Windows®XP		

Touch Panel Coordinate Data Resolution

Both the X and Y coordinates have a resolution of 1024.

The origin point (0,0) is located in the upper left corner of the screen.

Screen display origin, with resolution of 1024x768, is normally at the upper left corner of the screen. Therefore, a program to convert the touch coordinates to display coordinates is required.

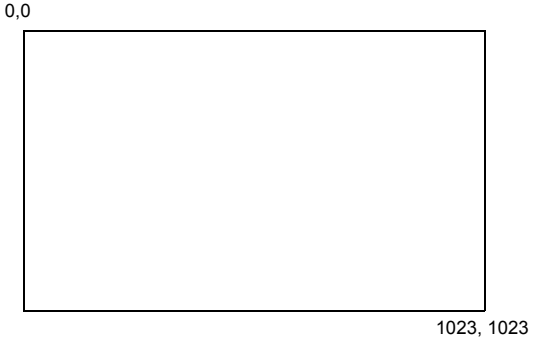

Touch Panel Coordinate Data Format

All data is in binary format:

- Header: 1 byte (11h=touched; 10h=released)
- X coordinate: 2 bytes (0 to 3FFh)
- Y coordinate: 2 bytes (0 to 3FFh)

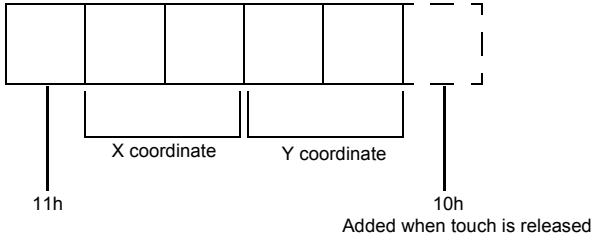

Example:

If the coordinate [(X=23 (11h), Y=500 (1F4h)] is touched:

Coordinate	Results
11h 0h 17h 1h F4h	Touched
11h 0h 17h 1h F4h	Continuous output with the same location
•	Moving the location without releasing touch
•	
•	
11h 0h 17h 1h F4h	Continuous data output unless finger is released
11h 0h 17h 1h F4h 10h	When released, only 1 unit of data is sent

Touch Panel Communication Program

8

iDisplay Software

Touch Screen Drivers

To install and use the software, refer to the Touch Screen Drivers section of the CD-ROM (User Manual Touch Panel Communication Program).

Maintenance

9

At a Glance

Overview

This chapter explains how to maintain the iDisplay.

What's in this Chapter?

This chapter contains the following topics:

Topic	Page
Regular Cleaning	88
Replacing the Gasket	90
Maintenance Checks	92

Regular Cleaning

Precautions

⚠ CAUTION

EQUIPMENT DAMAGE

Do not clean the unit with paint thinner, organic solvents, or strong acids.
Do not use hard or pointed objects to operate the touch-screen panel, since it can damage the panel surface.

Failure to follow this instruction can result in injury or equipment damage.

⚠ CAUTION

LOSS OF SEAL

Ensure that the gasket is in good working order and free from cracks, scratches, and dirt. A gasket that has been used for a long period of time may be scratched or dirty, and may have lost much of its water resistance. Change the gasket at least once a year, or when scratches or dirt become visible.

Failure to follow this instruction can result in injury or equipment damage.

⚠ DANGER

HAZARD OF ELECTRIC SHOCK, EXPLOSION, OR ARC FLASH

Disconnect all power before working on the equipment.

Failure to follow this instruction will result in death or serious injury.

Cleaning the iDisplay

The following table explains how to clean the iDisplay:

Display	How to clean
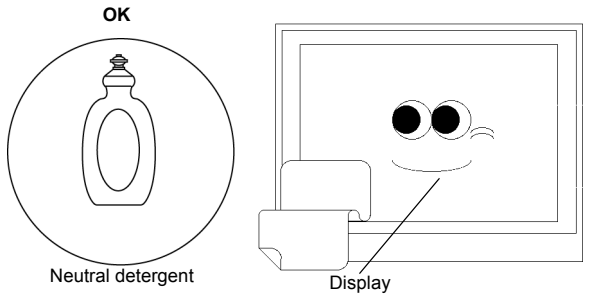	When the display surface or frame becomes dirty, use a soft cloth moistened with neutral detergent to wipe away any dust or stains.
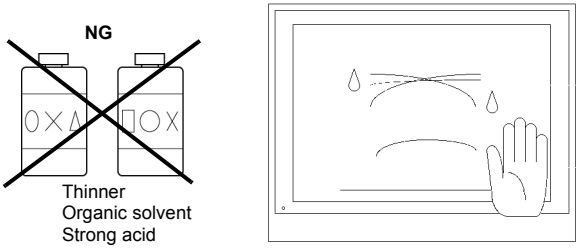	Do not clean the unit with thinner, organic solvents, or strong acids.
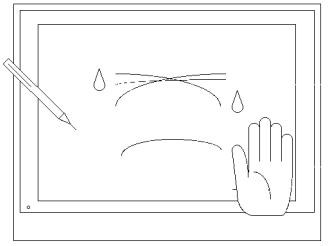	Do not use sharp or hard objects, such as a mechanical pencil or screwdriver, to push on the display. This could damage the unit.
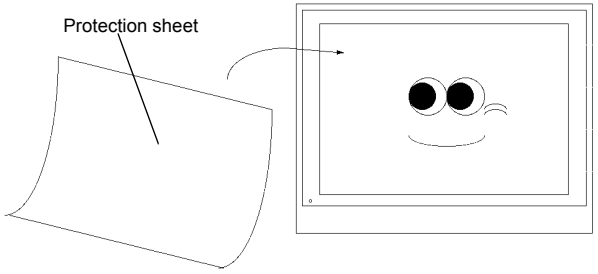	Attach the screen protection sheet when using the iDisplay in extremely dirty or dusty areas.

Replacing the Gasket

Introduction

The installation gasket protects the iDisplay and improves its water resistance.

⚠ CAUTION

LOSS OF SEAL

Ensure that the gasket is in good working order and free from cracks, scratches, and dirt. A gasket that has been used for a long period of time may be scratched or dirty, and may have lost much of its water resistance. Change the gasket at least once a year, or when scratches or dirt become visible.

Failure to follow this instruction can result in injury or equipment damage.

Note: The Gasket is included with the Maintenance Kit.

Installing a Replacement Gasket

The following table describes how to replace the installation gasket:

Step	Action
1	Place the unit on a flat level surface with the display facing downwards.
2	Remove the gasket from the unit.
3	Attach the new gasket ensuring that the gasket's grooved sides are vertical. Ensure that the gasket's seam is not inserted into any of the corners of the unit as this may cause the gasket to tear. 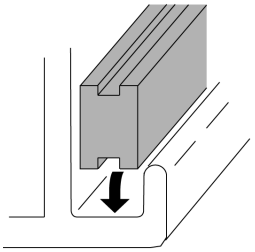
4	Check that the gasket is correctly attached to the unit. The upper surface of the gasket should evenly protrude approximately 2 mm (0.08 in) out of the groove. 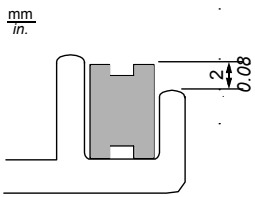

Maintenance Checks

Introduction

To keep your iDisplay unit in best condition, check the following points regularly:

- iDisplay Operation Environment
- Electrical Specifications
- Related Items

iDisplay Operating Environment

- Is the operating temperature within the allowable range (0°C to 50°C) (32°F to 122°F)?
- Is the operating humidity within the specified range (30%RH to 90%RH), dry bulb temperature of 39°C (102°F) or less?
- Is the operating atmosphere free of corrosive gases?

Electrical Specifications

Is the input voltage appropriate (85 VAC to 264 VAC)?

Related Items

- Are all power cords and cables connected properly? Have any become loose?
- Are all mounting brackets holding the unit securely?
- Are there any scratches or traces of dirt on the installation gasket?

Troubleshooting

10

At a Glance

Overview

This chapter describes how to locate and resolve problems with the iDisplay unit.

What's in this Chapter?

This chapter contains the following topics:

Topic	Page
Troubleshooting Checklists	94
Error Message	96

Troubleshooting Checklists

Introduction

When a problem occurs, make sure to go through the checklist and follow the instructions given.

Here are the main issues that may occur when using the iDisplay unit:

- The Panel display is blank:
  - No display appears after the unit is switched ON
  - The screen disappears during standard operation
  - The screen does not display normally
- The Touch Panel does not respond

Note: If the following checklists do not solve your problem, please contact your local Schneider Electric vendor or the vendor who sold you the iDisplay unit.

No Display

The table below suggests actions to take if the iDisplay unit display is blank or if the screen turns itself off:

Step	Check/Operation	Solution
1	Does the backlight light up?	● If No, follow the steps 2 to 5 ● If Yes, follow the step 6 to 10 If none, contact your local distributor.
2	Is the unit using the correct power voltage?	Connect the appropriate voltage. see *p. 34*
3	Turn OFF the power switch	
4	Is the power supply cable correctly connected to the unit?	Connect the power cable correctly. see *p. 57*
5	Is the problem resolved?	If none of the previous steps fixed the blank panel display problem, then there is a problem with the iDisplay. Contact your local Schneider distributor.
6	Is the PC operating?	Start the PC.
7	Are the iDisplay output settings the same as the PC's frequency and resolution?	Set the iDisplay output settings to match the PC’s frequency and resolution.
8	Is the RGB cable/DVI-D cable connected correctly?	Connect the RGB cable/DVI-D cable correctly. see *p. 60*
9	Does the screen display correctly?	Adjust the screen display parameters. see *p. 71*
10	Is the problem resolved?	If none of the previous steps fixed the blank panel display problem, then there is a problem with the iDisplay. Contact your local Schneider distributor.

Touch Panel Does Not Respond

If the touch panel does not react, or its reaction is very slow after it is pressed, the table below proposes some solutions:

Step	Check/Operation	Solution
1	Is the Touch Panel Driver installed in the PC (host)?	Install the Touch Panel Driver. See the Touch Screen drivers CD.
2	Is the Touch Panel Driver set correctly?	Set the Touch Panel Driver correctly. See the Touch Screen drivers CD.
3	Is the Slide Switch correctly set for the input interface?	Set the Slide Switch correctly. see *p. 69*
4	Is the USB cable connected correctly?	Connect the USB cable correctly. see *p. 59*
5	Is the problem resolved?	If none of the previous steps fixed the touch panel problem, then there is a problem with the iDisplay. Contact your local Schneider distributor.

Error Message

Introduction

An error message appears if an error occurs in the iDisplay unit during RUN mode.

Error Message List

The following table lists possible error messages:

Error Message	Problem	Solution
Out of range 1 to 4	A signal timing value that is not compatible with the iDisplay unit has been entered.	Set the iDisplay Output settings to match the PC's frequency and resolution. see *p. 25*
	A value for the dot clock which exceeds the iDisplay unit's usable timing range has been entered.	
	A resolution that is not compatible with the iDisplay unit has been set.	
No Signal	The Windows-compatible PC's power has not been turned ON.	Turn on the Windows-compatible PC's power.
	The Windows-compatible PC has not been correctly connected to the iDisplay unit.	Connect the RGB cable/DVI-D cable correctly.
	The input I/F and the image input signal type are not the same.	Adjust the screen display parameters. see *p. 71*

Index

A

AC Connector, 24

C

Characteristic
- Electrical, 35
- Environmental, 36
- Functional, 37
- Structural, 34

Connecting
- AC Power Cord, 54
- Power Supply, 57

D

Dimensions, 40
- External, 40
- With Fasteners, 41

Display, 23
DVI-D, 24

E

Error Message, 96

L

LED, 23

O

OSD
- Display Menu, 75
- Exiting, 72
- Main Menu, 72
- Starting, 71
- Tool, 73
- Using, 72

R

RS-232C, 24

S

Setting Switch, 24

T

Terminal Block
- Description, 55

Touch Panel, 23
Touch Panel Data, 82
Troubleshooting, 94

U

USB
- Front, 23
- Type B, 24

V

VGA, 24

You can download this technical publication and other technical information from our website at http://www.schneider-electric.com.

Visit http://www.schneider-electric.com for your nearest Schneider Electric affiliate.

© 2008 Schneider Electric. All Rights Reserved. 09/2008