Magelis HMI STU 655

User Manual

12/2009

EIO0000000614.00

www.schneider-electric.com

Schneider Electric

The information provided in this documentation contains general descriptions and/or technical characteristics of the performance of the products contained herein. This documentation is not intended as a substitute for and is not to be used for determining suitability or reliability of these products for specific user applications. It is the duty of any such user or integrator to perform the appropriate and complete risk analysis, evaluation and testing of the products with respect to the relevant specific application or use thereof. Neither Schneider Electric nor any of its affiliates or subsidiaries shall be responsible or liable for misuse of the information contained herein. If you have any suggestions for improvements or amendments or have found errors in this publication, please notify us.

No part of this document may be reproduced in any form or by any means, electronic or mechanical, including photocopying, without express written permission of Schneider Electric.

All pertinent state, regional, and local safety regulations must be observed when installing and using this product. For reasons of safety and to help ensure compliance with documented system data, only the manufacturer should perform repairs to components.

When devices are used for applications with technical safety requirements, the relevant instructions must be followed.

Failure to use Schneider Electric software or approved software with our hardware products may result in injury, harm, or improper operating results.

Failure to observe this information can result in injury or equipment damage.

© 2009 Schneider Electric. All rights reserved.

Table of Contents

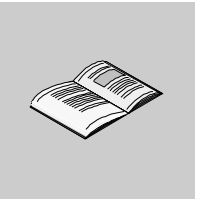

	Safety Information	**5**
	About the Book	**7**
Part I	**HMI STU 655 Panels**	**9**
Chapter 1	**HMI STU 655 Panels**	**11**
	HMI STU 655 Series of Panels	12
	HMI STU 655 Package Contents	15
	Accessories	16
	Parts Identification and Functions	18
	Certifications and Standards	21
	System Design	23
Chapter 2	**Specifications**	**25**
2.1	General Specifications	26
	General Specifications	26
2.2	Functional Specifications	28
	Display	29
	Memory, Clock, and Touch Panel	30
2.3	Interface Specifications	31
	Interface Specifications	32
	Specifications of Serial Interface COM1	33
2.4	Dimensions	35
	HMI STU 655 Dimensions	35
Chapter 3	**Installation and Wiring**	**37**
3.1	Installation	38
	Panel Cut-out Dimensions and Installation	39
	Installation Procedures	43
3.2	Wiring Principles	46
	Connecting the Power Cord	47
	Connecting the Power Supply	50
	Grounding	52

3.3 USB Port 54
Important Considerations When Using the USB Port 55
USB Data Transfer Cable (BMX XCA USB H018) - USB Driver Installation 56
USB Standard A 58
USB Mini-B 61
3.4 Ethernet Cable Connector 64
Presentation. 64
Part II Setting and Debugging 65
Chapter 4 Setting and Debugging 67
Types of Settings 68
System Settings. 69
Offline Settings 72
Diagnostics Settings 75
Chapter 5 Troubleshooting. 77
Troubleshooting Checklists 78
Self Test List 81
Chapter 6 Maintenance 83
Regular Cleaning 84
Periodic Check Points 86
Index 87

Safety Information

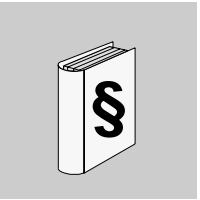

Important Information

NOTICE

Read these instructions carefully, and look at the equipment to become familiar with the device before trying to install, operate, or maintain it. The following special messages may appear throughout this documentation or on the equipment to warn of potential hazards or to call attention to information that clarifies or simplifies a procedure.

The addition of this symbol to a Danger or Warning safety label indicates that an electrical hazard exists, which will result in personal injury if the instructions are not followed.

This is the safety alert symbol. It is used to alert you to potential personal injury hazards. Obey all safety messages that follow this symbol to avoid possible injury or death.

⚠ DANGER

DANGER indicates an imminently hazardous situation which, if not avoided, **will result in** death or serious injury.

⚠ WARNING

WARNING indicates a potentially hazardous situation which, if not avoided, **can result in** death or serious injury.

⚠ CAUTION
CAUTION indicates a potentially hazardous situation which, if not avoided, **can result in** minor or moderate injury.

CAUTION
CAUTION, used without the safety alert symbol, indicates a potentially hazardous situation which, if not avoided, **can result in** equipment damage.

PLEASE NOTE

Electrical equipment should be installed, operated, serviced, and maintained only by qualified personnel. No responsibility is assumed by Schneider Electric for any consequences arising out of the use of this material.

A qualified person is one who has skills and knowledge related to the construction and operation of electrical equipment and the installation, and has received safety training to recognize and avoid the hazards involved.

About the Book

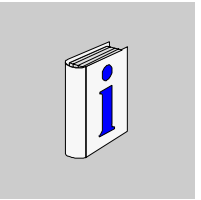

At a Glance

Document Scope

This manual describes how to use the Magelis HMI STU 655 unit.

Validity Note

This documentation is valid for Vijeo Designer version 5.1 or later.

Product Related Information

⚠ WARNING

UNINTENDED EQUIPMENT OPERATION

The application of this product requires expertise in the design and programming of control systems. Only persons with such expertise should be allowed to program, install, alter, and apply this product.

Follow all local and national safety codes and standards.

Failure to follow these instructions can result in death, serious injury, or equipment damage.

User Comments

We welcome your comments about this document. You can reach us by e-mail at techcomm@schneider-electric.com.

HMI STU 655 Panels

I

Overview

This part describes how to use HMI STU 655 Panels.

What's in this Part?

This part contains the following chapters:

Chapter	Chapter Name	Page
1	HMI STU 655 Panels	11
2	Specifications	25
3	Installation and Wiring	37

HMI STU 655 Panels

1

Overview

This chapter describes the HMI STU 655 Panels and connectable devices.

What's in this Chapter?

This chapter contains the following topics:

Topic	Page
HMI STU 655 Series of Panels	12
HMI STU 655 Package Contents	15
Accessories	16
Parts Identification and Functions	18
Certifications and Standards	21
System Design	23

HMI STU 655 Series of Panels

Introduction

The HMI STU 655 is a Human Machine Interface product that has an operating voltage of 24 VDC.

The following table describes the HMI STU 655 characteristics:

Part number	Screen size	Screen (pixel) resolution	Mono/Color	Screen technology	Serial port	Ethernet port
HMI STU 655	8.9 cm (3.5 in)	320x240 (QVGA)	65 K colors and LED's backlight	TFT	Yes	Yes
TFT: Thin-Film Transistor Technology.						

Critical systems, Detected Alarms and Handling Requirements

Critical detected alarm indicators and system functions require independent and redundant protection hardware and/or mechanical interlocks.

If the unit for any reason becomes inoperative (for example, an inoperative backlight) it may be difficult or impossible to identify a function. Functions that may present a hazard if not immediately executed, such as emergency stop, must be provided independently of the unit. The design of the control system must take into account an inoperative unit (backlight) and that the operator is unable to control the machine or respond to detected errors using the unit.

When the power is cycled, wait at least 10 seconds before restoring the power to the HMI unit. Switching the power OFF and ON quickly can damage the unit.

⚠ WARNING

LOSS OF CONTROL

- Consider the potential failure modes of control paths in the machine control system design, such as:
  - The possibility of backlight failure,
  - Unanticipated link transmission delays or failures,
  - The operator being unable to control the machine,
  - The operator making errors in the control of the machine.
- Provide a means to achieve a safe state during and after a path failure for critical control functions such as emergency stop and overtravel stop.
- Provide separate or redundant control paths for critical control functions.
- Test individually and thorougly each implementation of the HMI STU 655 for correct operation before service.

Failure to follow these instructions can result in death, serious injury, or equipment damage.

⚠ WARNING

UNINTENDED EQUIPMENT OPERATION

- Do not use the unit as the only means of control for critical system functions such as motor start/stop or power control.
- Do not use the unit as the only notification device for critical alarms, such as device overheating or overcurrent.

Failure to follow these instructions can result in death, serious injury, or equipment damage.

Handling the LCD Panel

The following characteristics are specific to the LCD unit and are considered normal behavior:

- LCD screen may show unevenness in the brightness of certain images or may appear different when seen from outside the specified viewing angle. Extended shadows, or cross-talk, may also appear on the sides of screen images.
- LCD screen pixels may contain black and white colored spots and color display may seem to have changed over time.
- When the same image is displayed on the screen for a long period, an after-image may appear when the image is changed. If this happens, turn off the unit, wait 10 seconds and then restart it.

NOTE: Do not display the same image for a long time, change the screen image periodically.

⚠ CAUTION

SERIOUS EYE AND SKIN INJURY

The liquid present in the LCD panel contains an irritant:

- Avoid direct skin contact with the liquid.
- Wear gloves when you handle a broken or leaking unit.
- Do not use sharp objects or tools in the vicinity of the LCD touch panel.
- Handle the LCD panel carefully to prevent puncture, bursting, or cracking of the panel material.

If the panel is damaged and any liquid comes in contact with your skin, immediately rinse the area with running water for at least 15 min.

If the liquid gets in your eyes, immediately rinse your eyes with running water for at least 15 minutes and consult a doctor.

Failure to follow these instructions can result in injury or equipment damage.

Using Touch Panel Correctly

⚠ WARNING

UNINTENDED EQUIPMENT OPERATION

- Operate the HMI STU 655 touch panel with only one finger.
- Do not activate two or more points of the touch panel simultaneously.

Failure to follow these instructions can result in death, serious injury, or equipment damage.

Use only one finger to select an object on the touch panel.

If the touch panel receives pressure at two or more points at the same time, an unintended object could be selected.

HMI STU 655 Package Contents

Package Contents

Verify all items listed here are present in your package:

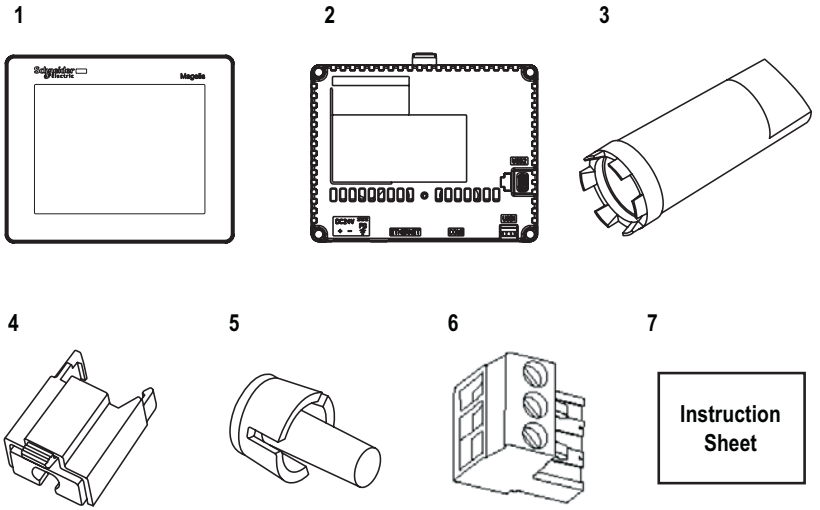

1 Display Module
2 Rear Module
3 Tightening Wrench
4 USB Standard Type A Cable Holder
5 Anti-rotation Tee
6 Terminal Block
7 Quick Reference Guide

Revision

You can identify the product version (PV), revision level (RL) and the software version (SV) from the unit product label.

Accessories

Optional Accessories

Product Number	Description
HMI ZS61	Set of 5 Screen Protective Sheets
HMI ZSU KIT	Accessory Kit for HMI STU 655, contains: ● USB standard Type A cable holder ● USB mini B cable holder ● Anti-rotation Tee ● Panel adaptor
ZB5AZ905	Tightening Wrench
ZB5AZ901	Kit of 10 display module fixing nuts
BMX XCA USB H018	Mini-B USB <-> PC download cable
HMI ZSUSBB	USB Front Cable (MiniB)
HMI ZURS	USB-232C Converter Cable
XBT ZGPWS1	Set of 5 Power Connectors

Serial Interface Items

Product Number	Description
XBT Z9780 (2.5 m/8.20 ft) **XBT Z9782** (10 m/32.80 ft)	Connects COM1 to Premium, Micro or Twido PLC.
XBT Z9980 (2.5 m/8.20 ft) **XBT Z9982** (10 m/32.8 ft)	Connects COM1 to Modicon M340
VW3A8306	Connects COM1 to derivation box TSXSCA62
VW3A8306R10	Connects COM1 to ATV Drives, a Hub LU9GC3 or Fieldbus Taps TWDXCAT3RJ or TWDXCAISO
XBT Z9715	Connects COM1 port to Advantys STB
XBT ZG939	Cable adapter COM1, RJ45
XBT Z968 **XBT Z9680** **XBT Z9681**	Connects COM1 port with XBTZ adapter to Premium, Micro or Twido PLC
XBT Z9710	Connects COM1 port with XBTZ adapter to Quantum PLC
XBT Z9711	Connects COM1 port with XBTZ adapter to Momentum PLC
XBT Z908	Connects COM1 port with XBTZ adapter to derivation box TSXSCA62

Product Number	Description
XBT Z938	Connects COM1 port with XBTZ adapter to ATV drives, a Hub LU9GC3 or Fieldbus Taps TWDXCAT3RJ or TWDXCAISO
XBT Z918	Connects COM1 port with XBTZ adapter to Premium SCY
XBT Z988	Connects COM1 port with XBTZ adapter to Advantys STB
XBT Z9733	Connects COM1 to Rockwell DF1 Logix PLC
XBT Z9734	Connects COM1 to Rockwell DH485 Logix PLC
XBT Z980	Connects COM1 with XBT Z adapter to Mitsubishi PLC FX series CPU
XBT Z9743	Connects COM1 to Omron PLC Sysmac Link series
XBT Z9730 **XBT Z9731**	Connects COM1 with XBT Z adapter to Rockwell DF1 PLC
XBT Z9732	Connects COM1 with XBT Z adapter to Rockwell DH485 PLC
XBT Z9740	Connects COM1 with XBT Z adapter to Omron PLC Sysmac Link series

USB Interface Items

Product Number	Description
XBT ZG935	Connects the panel to a personal computer to transfer screen data and user program
XBT ZGUSB	Extends a USB host interface on a waterproofing cabinet
BMX XCAUSB018	Connects the panel to a: ● personal computer to transfer screen data and user program ● USB terminal port of a PLC (Modicon M340)
HMI ZSUSBB	Extends a USB device interface on a waterproofing cabinet
HMI ZURS	Connects the panel to a serial printer

Software

Product name	Description
Vijeo Designer (Version 5.1 or later)	Software installed on a PC for creating HMI unit project data

Parts Identification and Functions

Display Module

Front:

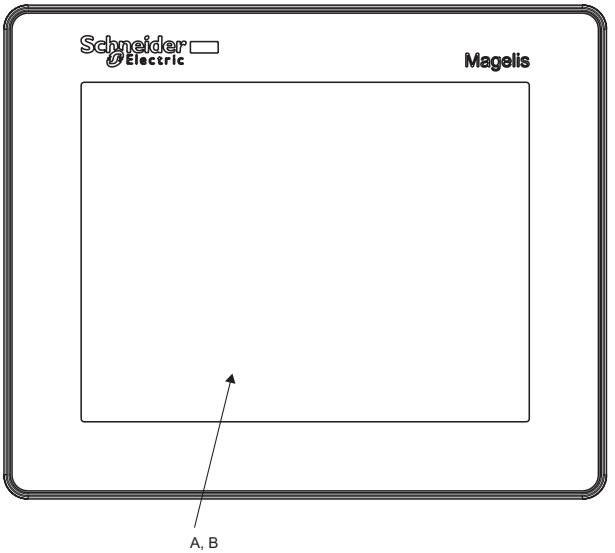

A Display: displays user created screens and remote equipment variables.
B Touch panel: performs screen change operations and sends data to the host (PLC).

Rear:

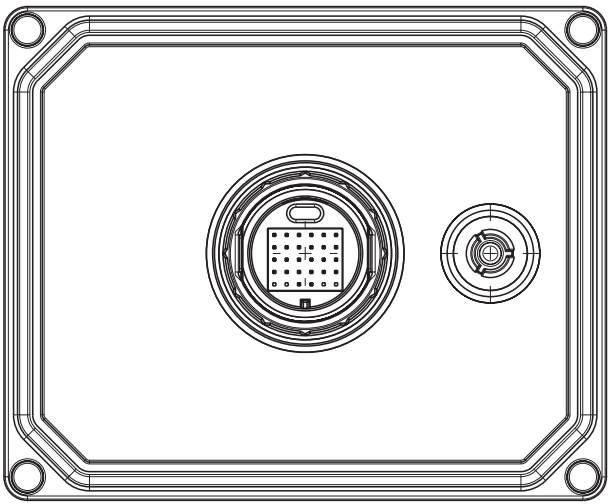

Rear Module

Front:

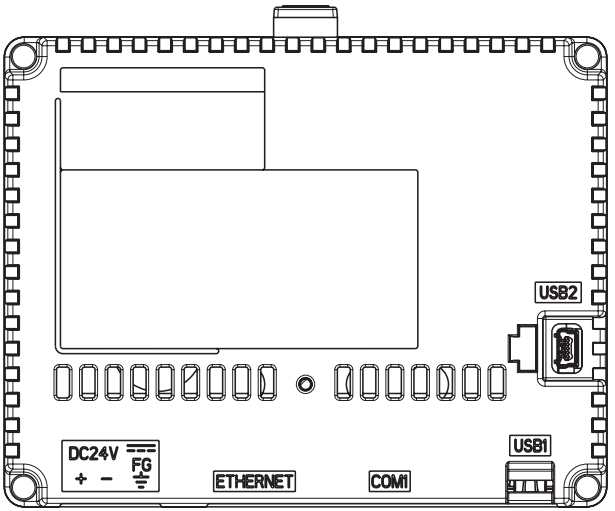

Rear:

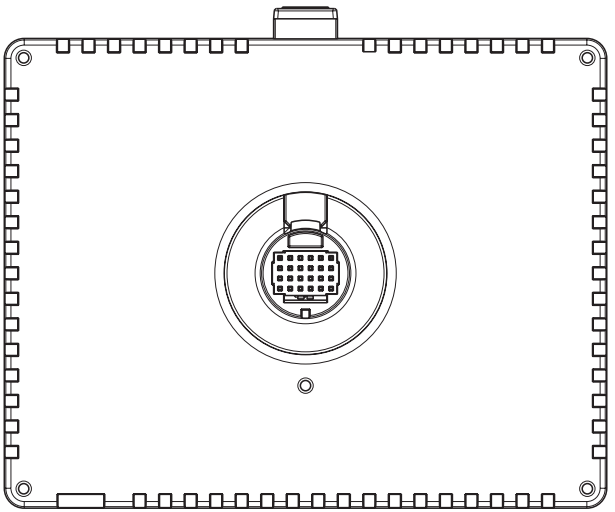

Connectors:

Bottom:

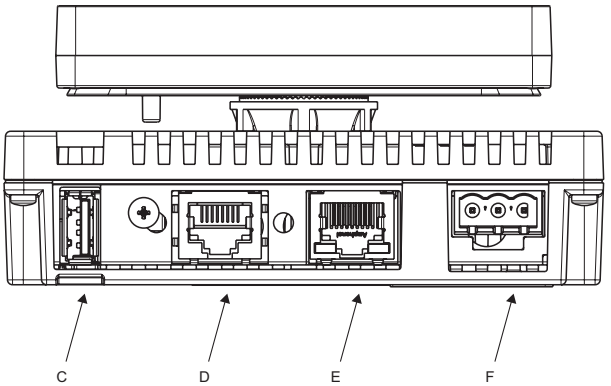

C Standard A USB port connector: connects the data transfer cable or memory stick to the unit.

D Serial I/F (host I/F 8 pin RJ45): connects a RS-232C or RS485 (serial) cable (from the host/PLC) to the unit (Y port).

E Ethernet Interface (LAN): connects an Ethernet cable (from the host/PLC) to the unit (X port).

F Power input Terminal block: connects the power input and ground wires to the unit.

Side:

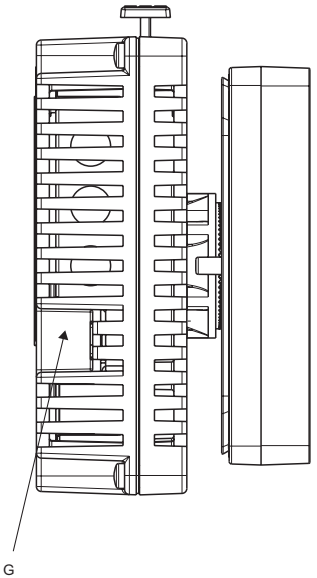

G Mini-B USB port connector: connects the data transfer PC cable to the unit.

Certifications and Standards

Introduction

Schneider Electric submitted this product for independent testing and qualification by third-party listing agencies. These agencies have certified this product as meeting the following standards.

Agency Certifications for HMI STU 655 Unit

HMI STU 655 unit is certified by the Underwriters Laboratory according to:

- UL 508 and CSA C22.2 n°142 for Industrial Control Equipment
- UL1604, ANSI/ISA 12.12.01 and CSA C22.2 n°213 for Electrical Equipment for Use in Class I, Division 2 Hazardous Locations

ATEX certification by INERIS is ongoing, please refer to product label.

HMI STU 655 unit is designed to comply to merchant navy bridge and deck requirements (Refer to the Schneider Electric website for installation guidelines).

For detailed information, contact your local distributor or see the catalog & marking on the product.

Hazardous Substances

HMI STU 655 unit is designed for compliance with:

- WEEE, Directive 2002/96/EC
- RoHS, Directive 2002/95/EC
- RoHS China, Standard SJ/T 11363-2006

UL Conditions of Acceptability and Handling Cautions for HMI STU 655 Unit

The HMI STU 655 unit is suitable for use in hazardous locations in accordance with Class 1, Division 2 standards. All relevant local, state, and regional codes must be followed.

CE Markings

This product conforms to the necessary requirements of the following Directives for applying the CE label:

- 2006/95/EC Low Voltage Directive
- 2004/108/EC EMC Directive

This conformity is based on compliance with IEC61131-2.

⚠ DANGER

RISK OF EXPLOSION IN HAZARDOUS LOCATIONS

- Verify that the power, input and output (I/O) wiring are in accordance with Class I, Division 2 wiring methods.
- Do not substitute components that may impair compliance to Class I, Division 2.
- Turn off the power supply before disconnecting, replacing or wiring modules.
- Do not connect or disconnect equipment and replace or wire modules in a location that has any risk of explosion.
- Securely lock externally connected units and each interface before turning on the power supply.
- Wipe the front panel with a damp cloth before turning on the power supply.

Failure to follow these instructions will result in death or serious injury.

Interfaces are: COM1, ETHERNET, USB1 and USB2.

System Design

Introduction

The following diagrams represent equipment that can be connected to the unit.

HMI STU 655 Edit Mode Peripherals

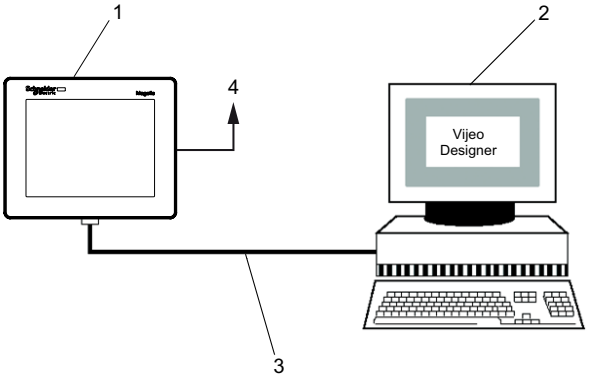

1 HMI STU 655 unit
2 Personal computer
3 **BMX XCA USB H018** cable
4 To Ethernet network

HMI STU 655 Run Mode Peripherals

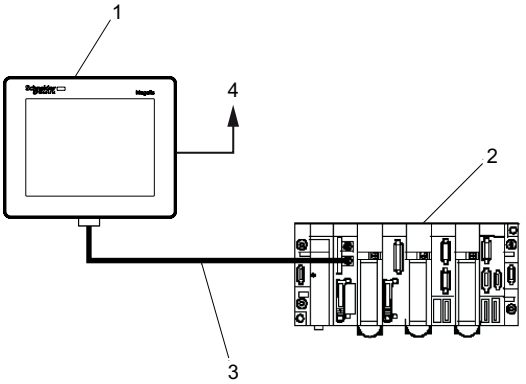

1 HMI STU 655 unit
2 PLC
3 **HMI ZSUSBB** cable
4 To Ethernet network

Connecting Magelis HMI STU 655 unit to an external device

The following diagram represents a selection of equipment that can be connected to the HMI STU 655 unit.

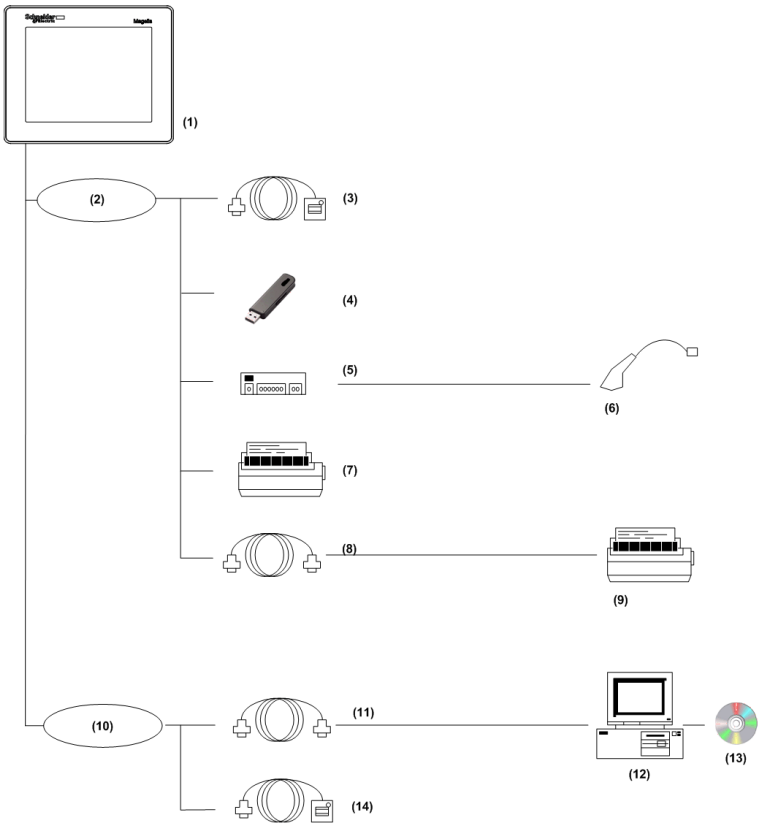

1 HMI STU 655
2 USB HOST interface (TYPE-A)
3 USB Front Cable (A) 1 m (3.28 ft) **XBT ZGUSB**
4 USB Memory
5 USB HUB (Self Power Only)
6 Barcode Reader
7 Printer
8 USB-232C Converter Cable 0.5 m (1.64 ft) **HMI ZURS**
9 Printer (Commodity). NEC PC-PR201/PL Command Compatible, EPSON ESC/P24-J84© Command Compatible or HP Laser Jet PCL4 Command Compatible
10 USB DEVICE interface (TYPE-miniB)
11 Download Cable **BMX XCA USB H018**
12 PC
13 Vijeo-Designer
14 USB Front Cable **HMI ZSUSBB**

Specifications

2

Overview

This chapter presents the HMI STU 655 specifications.

What's in this Chapter?

This chapter contains the following sections:

Section	Topic	Page
2.1	General Specifications	26
2.2	Functional Specifications	28
2.3	Interface Specifications	31
2.4	Dimensions	35

2.1 General Specifications

General Specifications

Electrical Specifications

The following table shows the electrical specifications of HMI STU 655:

Rated Input Voltage	Input Voltage Limits	Acceptable Voltage Drop	Power Consumption	In-Rush Current	Voltage endurance between power terminal and frame ground (FG)	Insulation Resistance between power terminal and FG
24 Vdc	20.4 Vdc to 28.8 Vdc	≤ 10 ms	≤ 6.5 W	≤ 30 A	1000 Vac 20 mA for 1 minute	10 MΩ or higher at 500 Vdc

Environmental Specifications

The following table shows the environmental specifications of HMI STU 655:

	Specification	Value
Physical Environment	Ambient operating temperature (cabinet interior and panel face)	0 °C to +50 °C (32 °F to 122 °F)
	Storage temperature	-20 °C to +60 °C (-4 °F to 140 °F)
	Relative Humidity	85 % w/o condensation (Non-condensing, wet bulb temperature 39 °C (102.2 °F) or less)
	Air purity (dust)	≤ 0.1 mg/m^3 (10^{-7} oz/ft^3) (non-conductive levels)
	Corrosive gases	Free of corrosive gases
	Atmospheric pressure	800 hPa to 1,114 hPa (2000 m (6,561 ft) or lower)

	Specification	Value
Mechanical Environment	Vibration immunity (operating)	IEC 61131-2 1gn 5Hz to 150Hz (maximum 3.5 mm (0.13 in.))
	Protection (front panel)	IP 65 - (IEC 60529)
	Protection structure	Type 4X indoor, installed on a panel
	Protection (rear panel)	IP 20 - (IEC 60529)
	Shock immunity (operating)	IEC 61131-2 15gn 11 ms
	Cooling method	Natural air circulation
	Weight	0.25 kg (0.55 lb.) or less (main unit only)
	Color	Front bezel: dark gray
	Material	PC/PBT
Electrical Environment	Noise immunity	Noise voltage: 1000 Vp-p Pulse width: 1 µs Rising time: 1 ns
	High Energy Surges	1 kV CM, 0.5 kV DM on DC power supply 1 kV CM on shielded cables
	Electrical fast transient burst	2 kV CM, 2 kV DM on DC power supply. 1 kV on shielded cables
	Radiated radio frequency electromagnetic field	10 V/m / 80 MHz to 2.7GHz Sinus amplitude modulated 80 % 1 kHz + Internal clock frequency
	Electrostatic Discharge Immunity	6 kV direct contact 8 kV air contact
	Grounding	D type grounding (SG-FG connected)
CM Common Mode **DM** Differential Mode		

2.2 Functional Specifications

Overview

This section presents the HMI STU 655 functional specifications of the display, memory and interfaces.

What's in this Section?

This section contains the following topics:

Topic	Page
Display	29
Memory, Clock, and Touch Panel	30

Display

Display Specifications

The following table shows the display specifications of the HMI STU 655:

Items	HMI STU 655
Type	Color TFT LCD
Resolution (pixels)	320 x 240 (QVGA)
Active Display Area	W70.56 x H52.92 (mm) W2.78 x H2.08 (in.)
Colors	65536 colors
Backlight	LED backlight:
	Lifetime: 50000 hours before dimmed to 50% brightness. Ambient temperature = 25°C (77°F)
	Non exchangeable
	LED ON / OFF control, adjustable screen saver activation time
Brightness adjustment	16 levels of adjustment available via touch panel in the Configuration menu.
Brightness on LCD surface	White LED: 350 cd/m^2 (33 cd/ft^2) maximum
View angle	• 60 degrees: left, right • 40 degrees: up • 60 degrees: down (Test condition: contrast ratio > 2)
System embedded language character sets	ASCII: (Code page 850) alphanumeric (including european characters) Chinese: (GB2312-80 codes) simplified Chinese fonts Japanese: ANK 158 Kanji: 6,962 (JIS Standards 1 & 2) (including 607 non-kanji characters) Korean: (KSC5601 - 1992 codes) Hangul fonts Taiwanese: (Big 5 codes) traditional Chinese fonts
Character sizes (2)	8 x 8, 8 x 16, 16 x 16 and 32 x 32 pixels fonts
Font sizes	Width can be expanded 1 to 8 times. Height can be expanded 1/2 and 1 to 8 times.
8 x 8 pixels	40 characters per row, x 30 rows
8 x 16 pixels	40 character per row, x 15 rows
16 x 16 pixels	20 character per row, x 15 rows
32 x 32 pixels	10 character per row, x 7 rows

Memory, Clock, and Touch Panel

Memory

The following table shows the memory specifications of HMI STU 655:

Items	Specification
Application flash	16 MB
Data backup in FRAM	64 KB
Application run DRAM	32 MB

Memory Back-up Management in FRAM

Detected alarms data are saved:

- automatically every hour in the back-up memory.
- upon user request through Vijeo Designer application design.

Clock

Variations in operating conditions can cause a clock shift from -380 to +90 seconds per month.

Touch Panel

The following table shows the touch panel specifications of HMI STU 655:

Items	Specification
Type	Analog resistance film type (Metal Tab, Golden Plated)
Lifetime	1 million touches or more

2.3 Interface Specifications

Overview

This section presents the interface specifications of the HMI STU 655 units.

What's in this Section?

This section contains the following topics:

Topic	Page
Interface Specifications	32
Specifications of Serial Interface COM1	33

Interface Specifications

Serial Interface COM1

The following table describes the serial interface COM1 of HMI STU 655 unit:

Interface	Description
Serial interface COM1 RJ45	
Asynchronous Transmission	RS232C / RS485
Data Length	7 or 8 bits
Stop Bit	1 or 2 bits
Parity	None, odd or even
Data Transmission Speed	2,400 to 115,200 bps
Maximum Transmission Distance	RS232C 15 m (49.21 ft)/ RS-485 1200 m (3,937 ft) at 100 kbps

USB1 Interface (USB peripherals)

The following table describes the USB1 Interface of HMI STU 655 unit:

Interface		Description
HOST Interface		
Transmission Speed	High speed	480 Mbps
	Full speed	12 Mbps
	Low speed	1.5 Mbps
Maximum Current Supplied		250 mA
Maximum Transmission Distance		5 m (16.40 ft) at 12 Mbps
Connector		USB Type-A V2.0

USB2 Interface (application download)

USB Mini B V2.0 type connector is used for application download.

Ethernet Interface

The following table describes the LED colors and status:

LED	Contents
Green 1	Link state
Green 2	Activity

Specifications of Serial Interface COM1

Introduction

This interface is used to connect the HMI STU 655 to remote equipment via an RS232C or RS485 cable. The connector used is a RJ45-8 pin type connector.

When using a long PLC cable to connect the unit, a difference of electric potential can be observed between the cable and the unit, even if both are connected to ground.

The serial port is not isolated. The SG (signal ground) and the FG (frame ground) terminals are connected inside the unit.

⚠ DANGER

ELECTRIC SHOCK

When using the SG terminal to connect an external device to the unit:

- Verify that a short-circuit loop is not created when you set up the system.
- Connect the #8 SG terminal to remote equipment when the host (PLC) unit is not isolated. Connect the #8 SG terminal to a known reliable ground connection to reduce the risk of damaging the RS232C/RS485 circuit.

Failure to follow these instructions will result in death or serious injury.

Serial Interface COM1

The following table describes the RJ45-8 pin connector:

Pin Connection	Pin	Signal Name	Direction	Meaning
Front 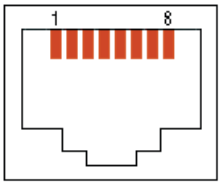	1	RXD	Input	Receive Data (RS232C)
	2	TXD	Output	Send Data (RS232C)
	3	Not connected	-	-
	4	D1	Output/Input	Transfer Data (RS485)
	5	D0	Output/Input	Transfer Data (RS485)
	6	RTS	Output	Request To Send
	7	Not connected	-	-
	8	SG	-	Signal Ground

Any excessive weight or stress on communication cables may cause a disconnection and unintended equipment operation.

⚠ CAUTION

LOSS OF COMMUNICATION

When using HMI STU 655:

- All connections to the communication ports on the bottom and sides of the unit must not put excessive stress on the ports.
- Securely attach communication cables to the panel or cabinet.
- Use only RJ45 cables with a locking tab in good condition.

Failure to follow these instructions can result in injury or equipment damage.

2.4 Dimensions

HMI STU 655 Dimensions

Display Module

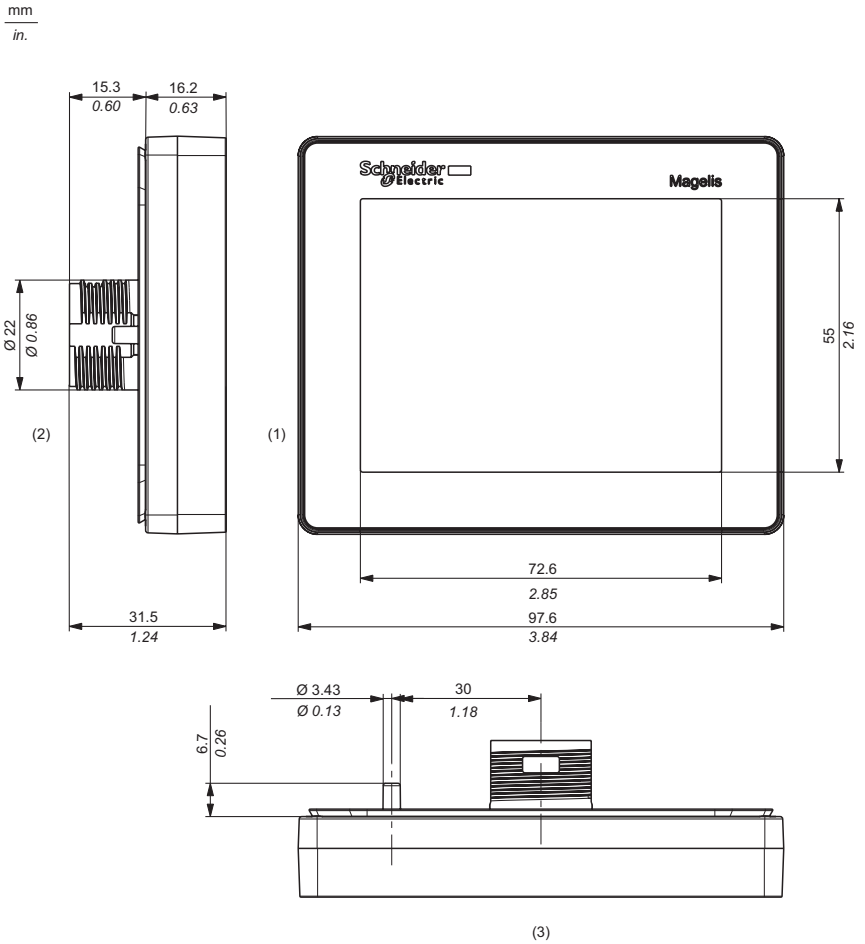

(1) Front
(2) Right Side
(2) Top

Rear Module

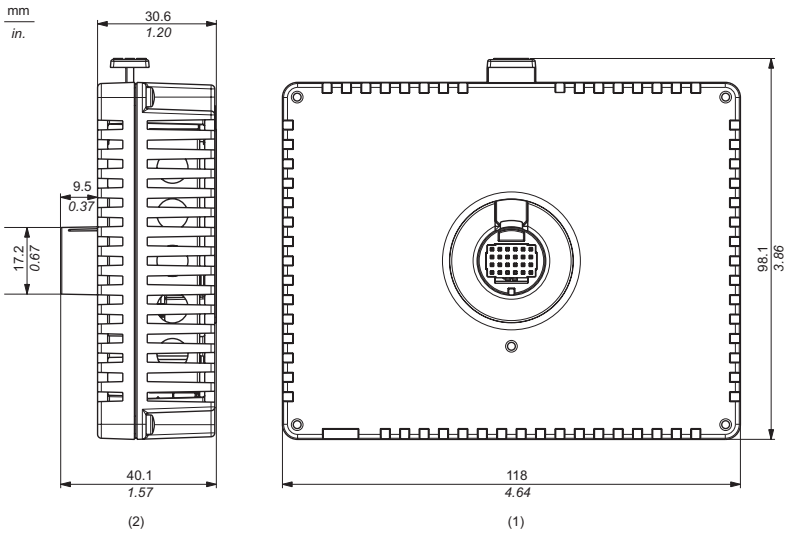

(1) Front
(2) Right Side

Display and Rear Modules

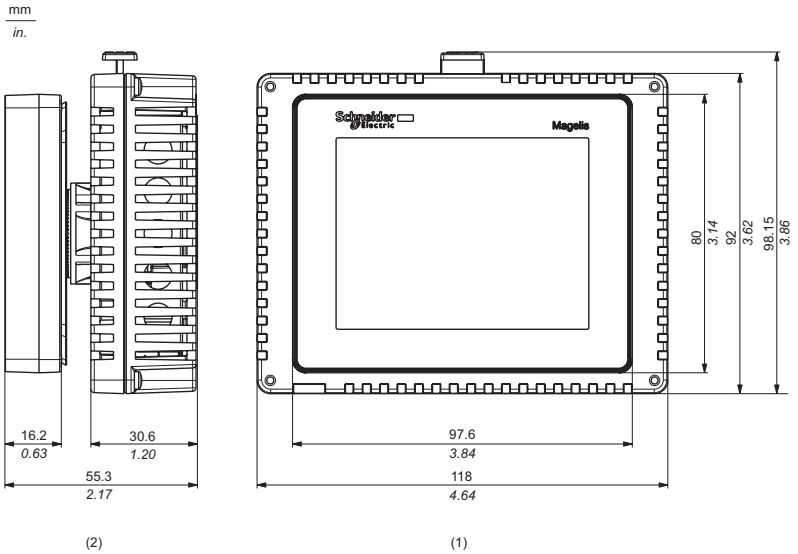

(1) Right Side
(2) Front

Installation and Wiring

3

Overview

This chapter describes the installation procedures and the wiring principles for HMI STU 655.

What's in this Chapter?

This chapter contains the following sections:

Section	Topic	Page
3.1	Installation	38
3.2	Wiring Principles	46
3.3	USB Port	54
3.4	Ethernet Cable Connector	64

3.1 Installation

Overview

This section describes the installation Procedures for HMI STU 655.

What's in this Section?

This section contains the following topics:

Topic	Page
Panel Cut-out Dimensions and Installation	39
Installation Procedures	43

Inserting a HMI STU 655 Without an Anti-rotation Tee

Create a panel cut-out and insert the display module of the unit into the panel from the front. The following illustration shows the panel cut-out for a HMI STU 655 unit without a tee:

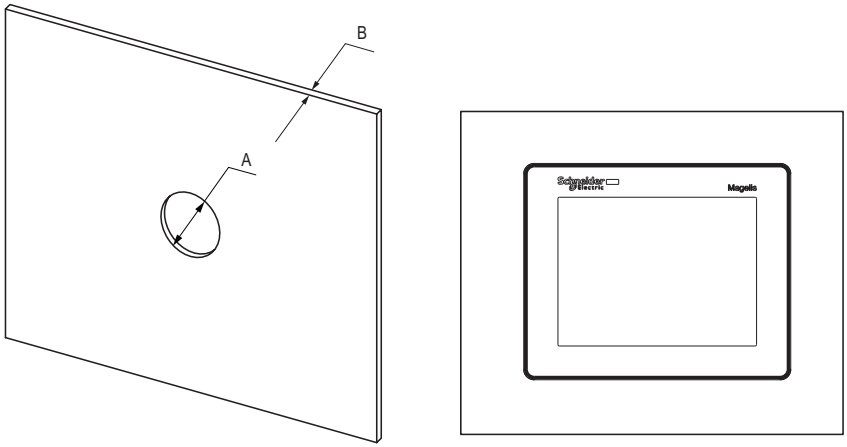

Dimensions

Unit	A (mm)	A (in.)	B (mm) (1)	B (in.) (1)	B (mm) (2)	B (in.) (2)
HMI STU 655	+0 22.50 -0.30	+0 0.88 -0.01	1.5 to 6	0.06 to 0.23	3 to 6	0.11 to 0.23
(1) Steel sheet **(2)** Glass fiber reinforced plastics (minimum GF30)						

NOTE: Without the tee option, the rotating torque that can be supported by the display module is 2.5 Nm (22.12 in-lb).

Inserting a HMI STU 655 With an Anti-rotation Tee

Create a panel cut-out and insert the display module of the unit into the panel from the front. The following illustration shows the panel cut-out for a HMI STU 655 unit using a tee:

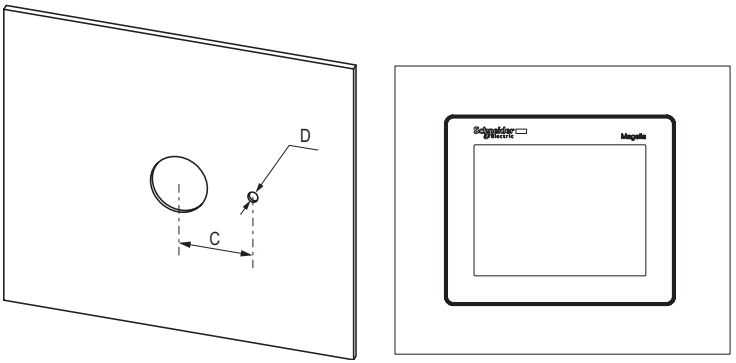

Dimensions

Unit	C (mm)	C (in.)	D (mm)	D (in.)
HMI STU 655	+0 30.00 -0.20	+0 1.18 -0.007	+0 4.00 -0.20	+0 0.15 -0.007

NOTE: With the tee option, the rotating torque that can be supported by the display module is 6 Nm (53.10 in-lb).

Illustration

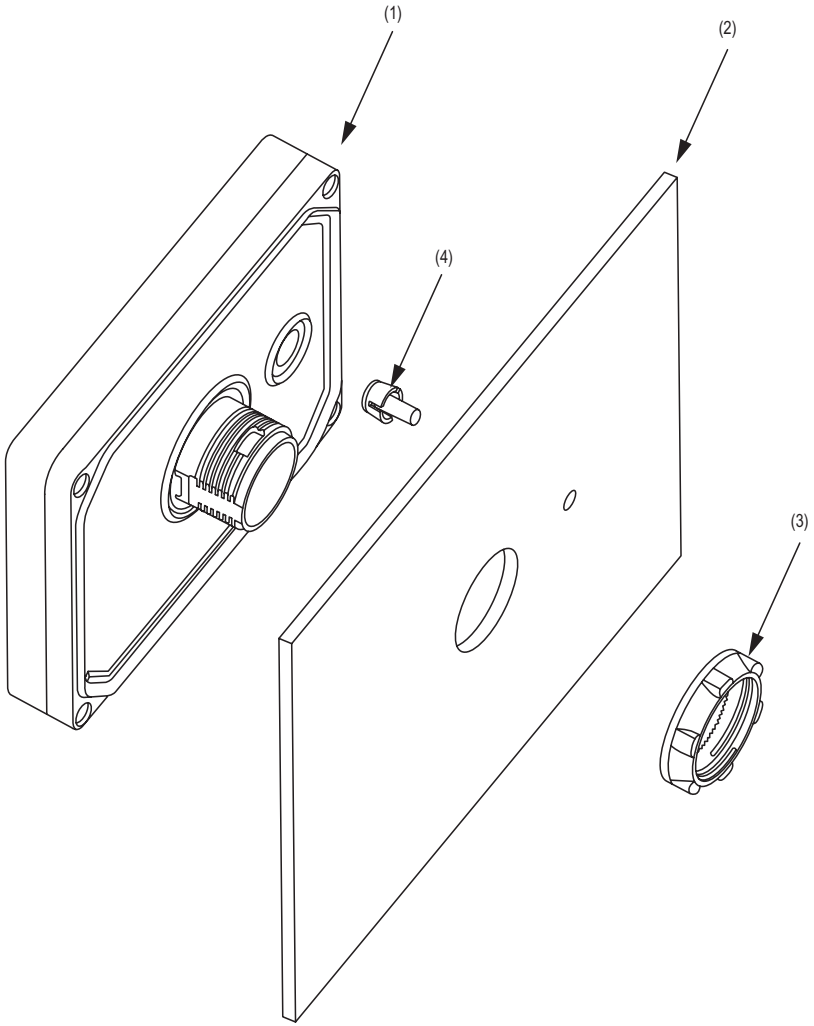

(1) Display module
(2) Support
(3) Nut
(4) Tee

Panel Adaptor

The Panel Adaptor, supplied in the accessory kit **HMI ZSU KIT** *(see page 16)*, allows mounting the product on:

- Metallic support thickness between 1 and 1.5 mm (0.039 and 0.059 in.)
- Plastic support thickness between 1 and 3 mm (0.039 and 0.118 in.)

The following illustration shows the assembly with the panel adaptor:

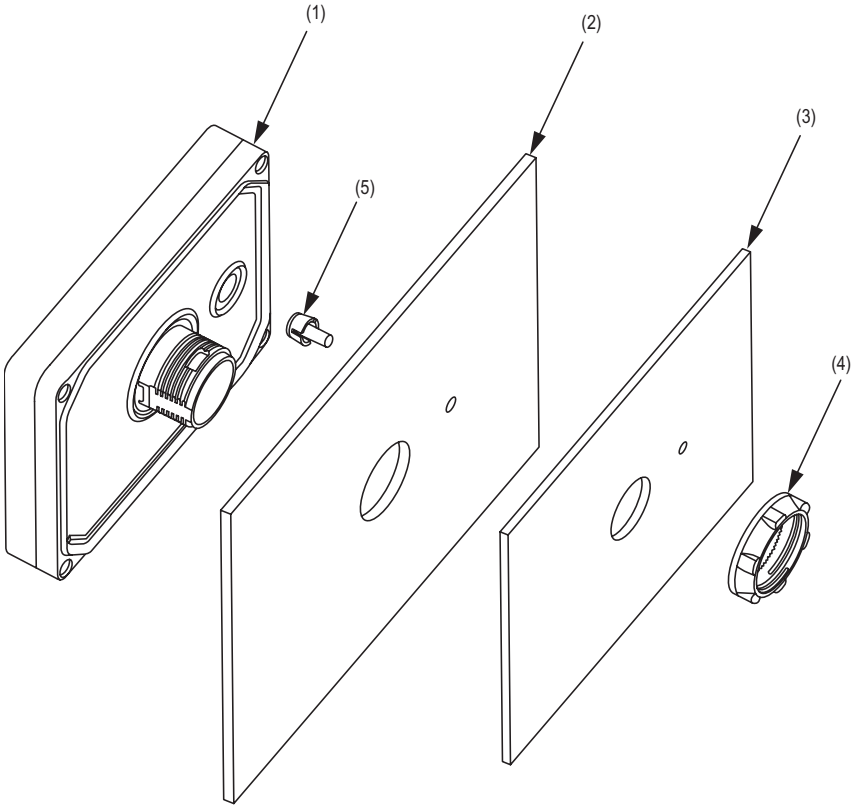

(1) Display module
(2) Support
(3) Panel adaptor
(4) Nut
(5) Tee

Installation Procedures

Panel Setup Procedure

Mount the unit in an enclosure that provides a clean, dry, robust and controlled environment (IP65 enclosure or UL50 4x, if indoors.) *(see page 26)*

Before installing the HMI STU 655 verify that:

- The gasket is flat and not damaged.
- The installation panel or cabinet surface is flat (planarity tolerance: 0.5 mm (0.019 in.)), in good condition and has no jagged edges. Metal reinforcing strips may be attached to the inside of the panel, near the panel cut-out, to increase the rigidity.
- The panel must be designed to avoid any induced vibration resonance on the rear module exceeding a punctual factor of 10 and to avoid any induced permanent vibration resonance.
  To reduce the resonance use the panel adaptor accessory.
- The ambient operating temperature and the ambient humidity are within their specified ranges *(see page 26)*.
- The heat from surrounding equipment does not cause the unit to exceed its specified operating temperature *(see page 26)*.
- The panel face is not inclined more than 30° when installing the unit in a slanted panel:

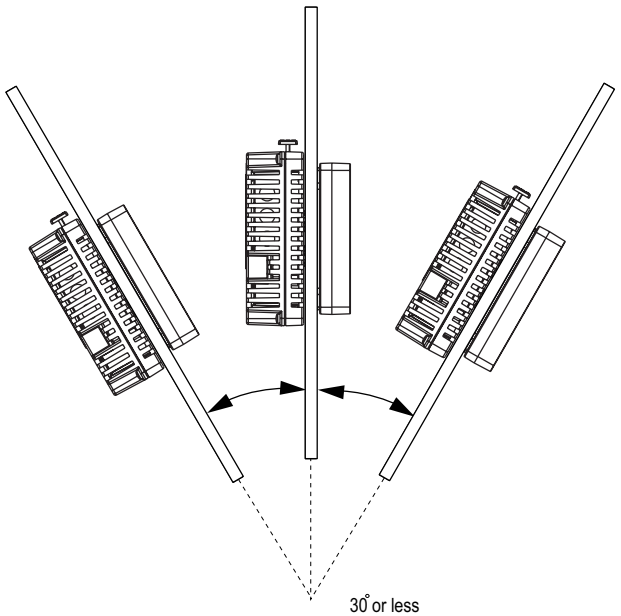

- the power plug is positioned vertically when the unit is vertically installed.
- the unit is at least 100 mm (3.94 in.) away from adjacent structures and other equipment for easier maintenance, operation and improved ventilation:

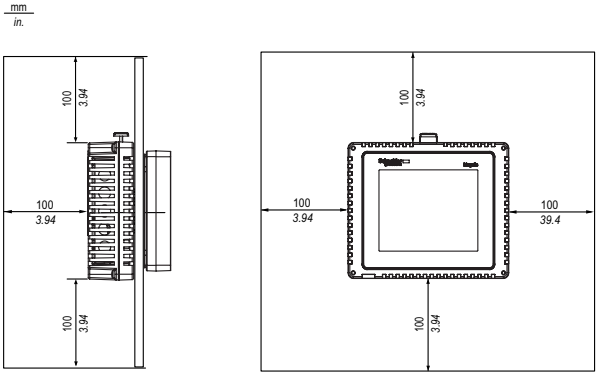

Step	Action
1	Place the unit on a clean and level surface with the display panel facing downward.
2	The support thickness depends on the material: - Metallic: between 1.5 and 6 mm (0.059 and 0.236 in.) - Plastic: between 3 and 6 mm (0.118 and 0.236 in.) If the thickness is between 1 and 1.5 mm (0.039 and 0.059 in.) for metallic support or 1 and 3 mm (0.039 and 0.118 in.) for plastic, use the panel adaptor supplied in accessory kit **HMI ZSU KIT** *(see page 16)*.
3	Create the correct sized holes required to install the unit, using the Panel Cut-out Dimension and Installation *(see page 39)*.
4	Insert the display module (with Tee, if used) into the panel hole: 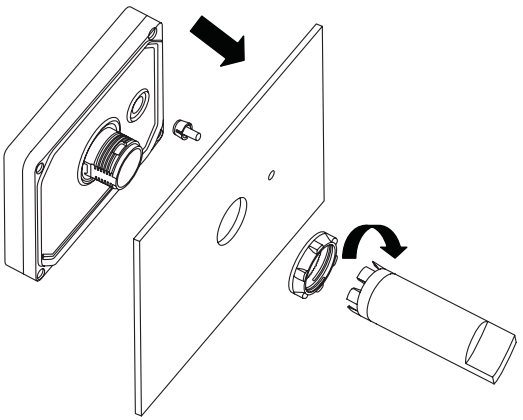 Screw the nut with the tightening wrench with a torque between 1.2 and 2 Nm (10.62 and 17.70 in-lb.).

Step	Action
5	Insert and push the rear module until it locks into place: 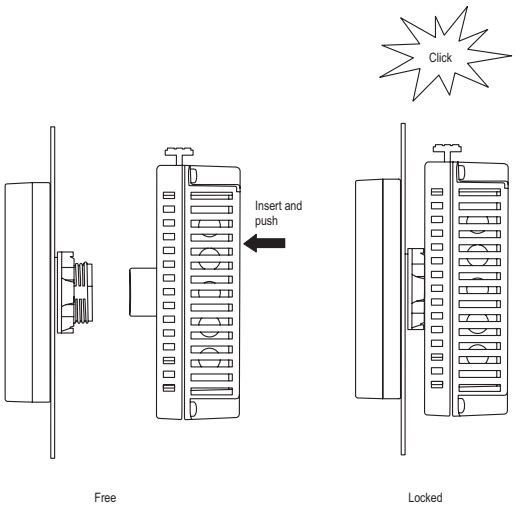
6	To remove the rear module, push the yellow button to unlock it, then pull the rear module out: 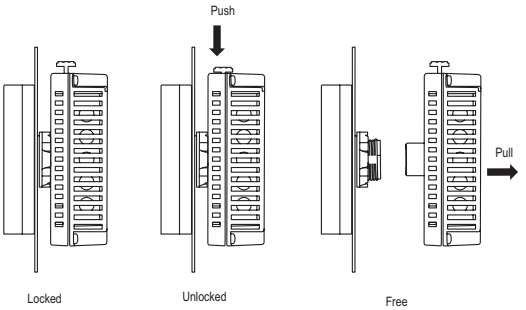

3.2 Wiring Principles

Overview

This section presents HMI STU 655 wiring principles.

What's in this Section?

This section contains the following topics:

Topic	Page
Connecting the Power Cord	47
Connecting the Power Supply	50
Grounding	52

Connecting the Power Cord

Introduction

Follow these instructions when supplying power to the unit:

- When the frame ground (FG) terminal is connected, verify the wire is grounded. Not grounding the unit can result in excessive Electromagnetic Interference (EMI). Grounding is required to meet EMC level immunity.
- The shield ground (SG) and FG terminals are connected internally in the unit.
- Remove power before wiring to the power terminals of the unit.
- The unit uses only 24 Vdc power. Using any other level of power can damage both the power supply and the unit.
- Since the unit is not equipped with a power switch, connect a power switch to the unit's power supply.

Power Cord Preparation

Before using your power cord:

- Verify the ground wire is the same gauge or heavier than the power wires.
- Do not use aluminum wires for the power cord for power supply.
- If the conductor end (individual) wires are not twisted correctly, the end wires may either short loop to each other or against an electrode. To avoid this, use D25CE/AZ5CE cable ends.
- Use wires that are 0.2 to 2.5 mm^2 (24 - 12 AWG) for the power cord, and twist the wire ends before attaching the terminals.
- The conductor type is solid or stranded wire.
- To reduce electromagnetic noise, make the power cord as short as possible.

Power Plug Illustration

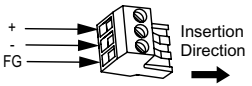

Connection	Wire
+	24 V
-	0 V
FG	Grounded terminal connected to the unit chassis

How to connect the Power Cord

The following table explains how to connect the power plug:

Step	Action
1	Remove the power cord from the power supply.
2	Remove the power plug from the unit.
3	Remove 7 mm (0.28 in.) of the vinyl cover of each of the power cord wires. 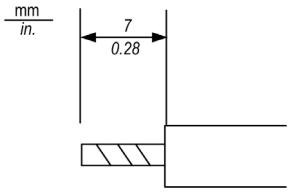
4	If using stranded wire, twist the ends. Tinning the ends with solder reduces the risk of fraying and enhances electrical transfer.
5	Connect the wires to the power plug by using a flat-blade screwdriver (Size 0.6 x 3.5).
6	Torque the mounting screws: 0.5 to 0.6 Nm (4.4 to 5.2 lb-in).
7	Replace the power plug to the power connector.

NOTE:

- Do not solder the wire directly to the power receptable pin.
- The power supply cord must meet the specification shown above. Twist the power cords together, up to the power plug, for EMC cancellation. (See illustration as shown below).

Power Connection

The following illustration displays a connection of the power cord:

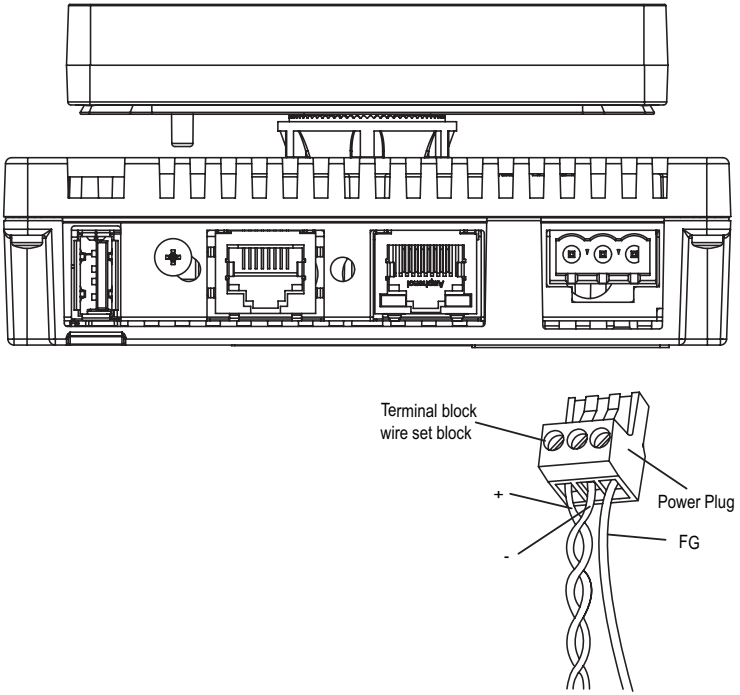

Connecting the Power Supply

Precautions

- Connect the power cord to the power connector on the side of the unit using the power plug.
- Use a regulated power supply with a Class 2 power supply between the line and the ground.
- Do not bundle the power supply cord with, or keep close to, main circuit lines (high voltage, high current), or input/output signal lines.
- Connect a lightning surge absorber to handle power surges.

Excessive stress on the power connection or attempting to install a unit with the power cables connected may disconnect or cause damage to the power connections. This can cause short circuits, fire or unintended equipment operation.

⚠ WARNING

SHORT CIRCUITS, FIRE, OR UNINTENDED EQUIPMENT OPERATION

- Securely attach power cables to the panel or cabinet.
- Use the designated torque to tighten the unit terminal block screws.
- Install and fasten unit on installation panel or cabinet prior to connecting Power Supply and Communication lines.

Failure to follow these instructions can result in death, serious injury, or equipment damage.

Power Supply Connections

For ease of maintenance, use the following optional connection diagram to set up your power supply connections.

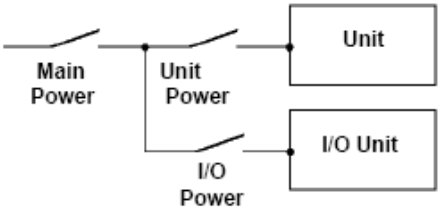

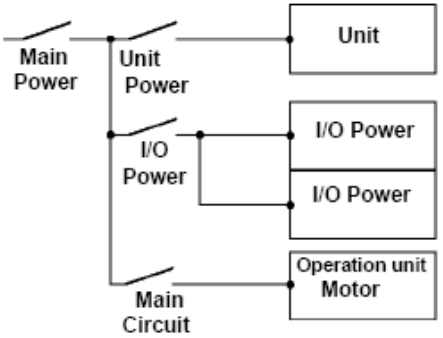

NOTE:

- Ground the surge absorber (E1) separately from the unit (E2).
- Select a surge absorber that has a maximum circuit voltage greater than the peak voltage of the power supply.

The following diagram displays a lightning surge absorber connection:

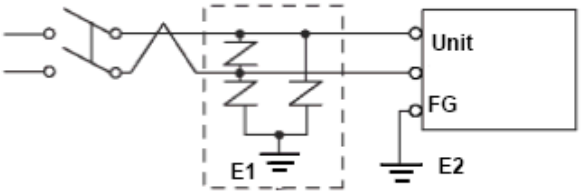

Grounding

Introduction

Take the following precautions for grounding the unit.

Exclusive Grounding

Connect the frame ground (FG) terminal on the power plug to an exclusive ground.

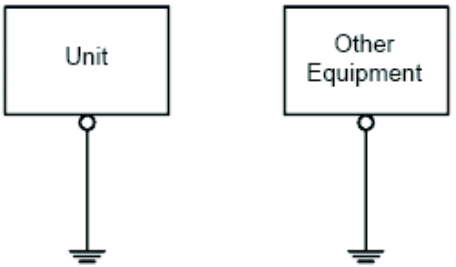

Grounding Procedure

Step	Action
1	Check that the grounding resistance is less than 100 Ω.
2	Create the connection point as close to the unit as possible, and make the wire as short as possible. When using a long grounding wire, replace the thin wire with a thicker wire, and place it in a duct.

Common Grounding

Precautions:

Electromagnetic Interference (EMI) can be created if the devices are improperly grounded. Electromagnetic Interference (EMI) can cause loss of communication.

Do not use common grounding, except for the authorized configuration described below.

If exclusive grounding is not possible, use a common connection point.

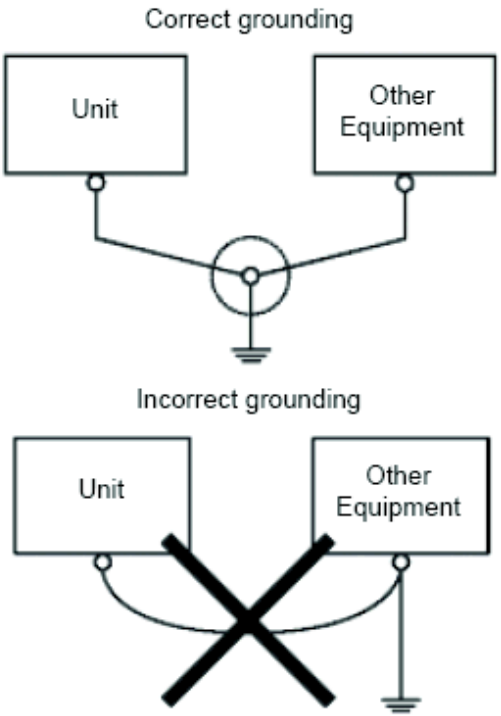

3.3 USB Port

Overview

This section presents the USB port.

What's in this Section?

This section contains the following topics:

Topic	Page
Important Considerations When Using the USB Port	55
USB Data Transfer Cable (BMX XCA USB H018) - USB Driver Installation	56
USB Standard A	58
USB Mini-B	61

Important Considerations When Using the USB Port

Introduction

Data transfer cable (BMX XCA USB H018) can be attached to the USB port to allow data transfer from the computer to the unit.

⚠ DANGER

RISK OF EXPLOSION IN HAZARDOUS LOCATIONS

In hazardous locations as described in UL1604 and ANSI/ISA - 12.12.01:

- confirm that the USB cable has been attached with the USB cable clamp before using the USB host interface.
- remove power before attaching or detaching any connector(s) to or from the unit.

Failure to follow these instructions will result in death or serious injury.

USB Data Transfer Cable (BMX XCA USB H018) - USB Driver Installation

Important information

Follow the procedure described below to avoid damage to the cable connector or the unit:

- Do not connect the USB data transfer cable until told to do so in the instructions.
- Insert the connector at the correct angle when connecting the USB data transfer cable to the PC or to the unit.
- Hold the connector, not the cable itself when disconnecting the cable.
- Use the port designated during installation. If the cable is unplugged from the port designated during installation and connected to a different port, the OS (Operating System) will not recognize the new port.
- Restart the PC and quit all resident applications before re-installing the software if the installation does not complete successfully.

NOTE: Vijeo Designer must be installed before installing the USB driver.

Installation Procedure

Step	Action
1	Insert the Vijeo Designer Installation CD-ROM into your CD-ROM drive. The Setup window for Vijeo Designer opens automatically. If not, at the Windows **Start** menu, click **Run** and type **x:\install.exe** (where x is your CR-ROM drive name).
2	In the **install** menu, select **USB Driver**.
3	Select the driver you want to install from the window that appears. For the BMX XCA USB H018 USB cable, select **Install USB driver for...**.
4	A popup window appears stating the installation of the driver was successful.
5	Connect the USB cable to the computer. Windows automatically detects the cable and states that the device is ready to use.

Post-Installation Check

Perform the following check after installation:

Step	Action
1	On the target machine, verify the USB cable is physically connected to the USB port.
2	On the PC, verify the USB cable is physically connected to the USB port.
3	On the desktop, right-click **My Computer** and click **Properties**.
4	In **System Properties** dialog box, select **Hardware** tab, and then click **Device Manager**.
5	In **Device Manager**, the USB link cable (BMX XCA USB H018) is displayed below the USB controller.

Troubleshooting

Detected problem/Symptom	Solution
The USB cable is not recognized.	Connect the cable correctly, or restart your PC. Also, when connecting a USB hub, connect it directly to your PC USB port.
Overcurrent occurred.	
The Plug and Play is not functioning correctly.	
You are unable to use the USB cable after connecting it to a USB hub.	The power supplied from the hub may be insufficient. Verify the hub is self-powered.
	Connect the cable directly to the PC USB port.
After installation, a **?** is displayed when you try to confirm the cable's status via the Device Manager.	The driver has not been installed correctly. Uninstall the driver and re-install it.

Uninstalling the USB Driver

Step	Action
1	Click the USB device icon **Stop USB link cable** in the Windows task tray and then click **Stop USB link cable (BMX XCA USB H018)** for Windows 2000, or **Safely remove USB link cable (BMX XCA USB H018)** for Windows XP.
2	When the **Safe To Remove Hardware** message box appears, remove the USB download cable.
3	Click **OK** to close the message box.

USB Standard A

Introduction

When using a USB device, you can attach a USB holder to the USB interface on the side of the unit to prevent the USB cable from being disconnected.

⚠ DANGER

RISK OF EXPLOSION IN HAZARDOUS LOCATIONS

In hazardous locations as described in UL1604 and ANSI/ISA - 12.12.01:

- confirm that the USB cable has been attached with the USB cable clamp before using the USB host interface.
- remove power before attaching or detaching any connector(s) to or from the unit.

Failure to follow these instructions will result in death or serious injury.

Attaching the USB Holder

Step	Action
1	Attach the USB holder to the USB Host Interface on the rear module. Hook the upper pick of the USB holder to the attachment hole of the main unit, and insert the lower pick as shown below to fix the USB holder. 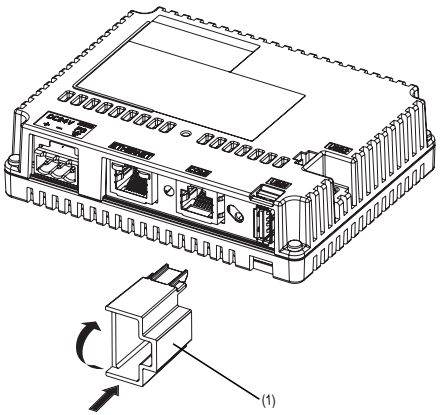 **(1)** USB Holder

Step	Action
2	Insert the USB cable into the USB host interface. 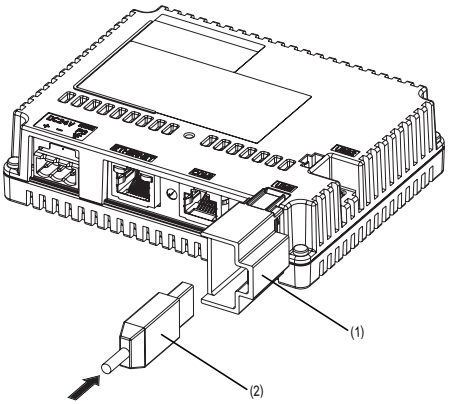 **(1)** USB Holder **(2)** USB Cable
3	Attach the USB cover to fix the USB cable in place. Insert the USB cover into the tab of the USB holder. 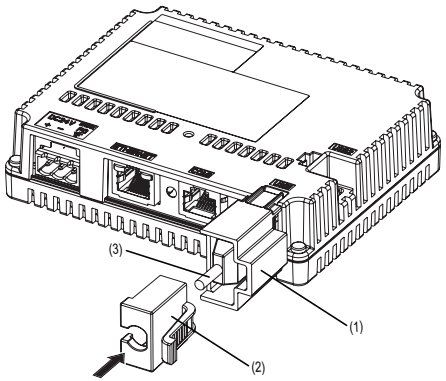 **(1)** USB Holder **(2)** USB Cover **(3)** USB Cable

Removing the USB Holder

Push down the tab of the USB holder and then remove the USB cover.

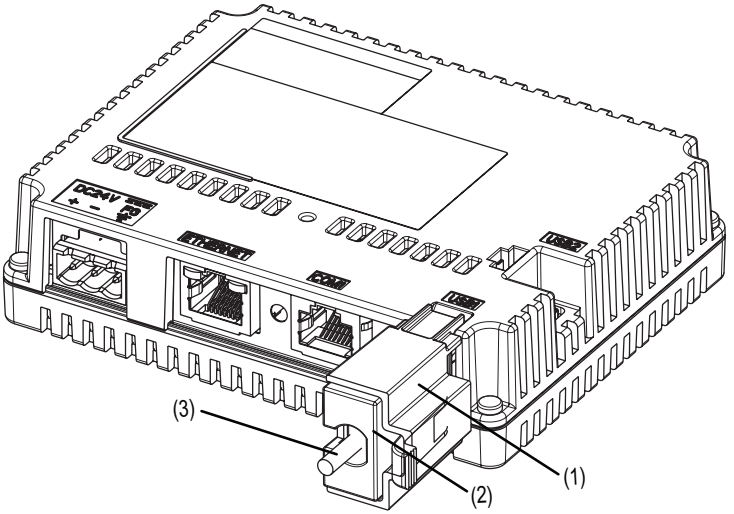

(1) USB Holder
(2) USB Cover
(3) USB Cable

USB Mini-B

Introduction

When using a USB device, you can attach a USB holder to the USB interface on the side of the unit to prevent the USB cable from being disconnected.

⚠ DANGER

RISK OF EXPLOSION IN HAZARDOUS LOCATIONS

In hazardous locations as described in UL1604 and ANSI/ISA - 12.12.01:

- confirm that the USB cable has been attached with the USB cable clamp before using the USB host interface.
- remove power before attaching or detaching any connector(s) to or from the unit.

Failure to follow these instructions will result in death or serious injury.

Attaching the USB Holder

Step	Action
1	Insert the USB cable into the USB host interface. 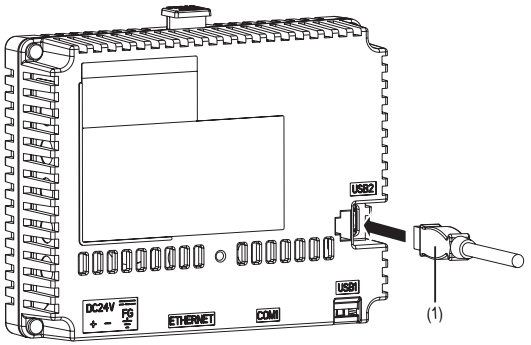 **(1)** USB Cable
2	Attach the USB holder to fix the USB cable in place. 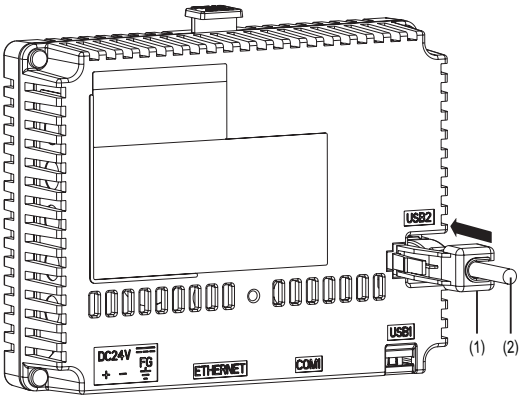 **(1)** USB Holder **(2)** USB Cable

Removing the USB Holder

Push down the tab of the USB holder and then remove the USB holder.

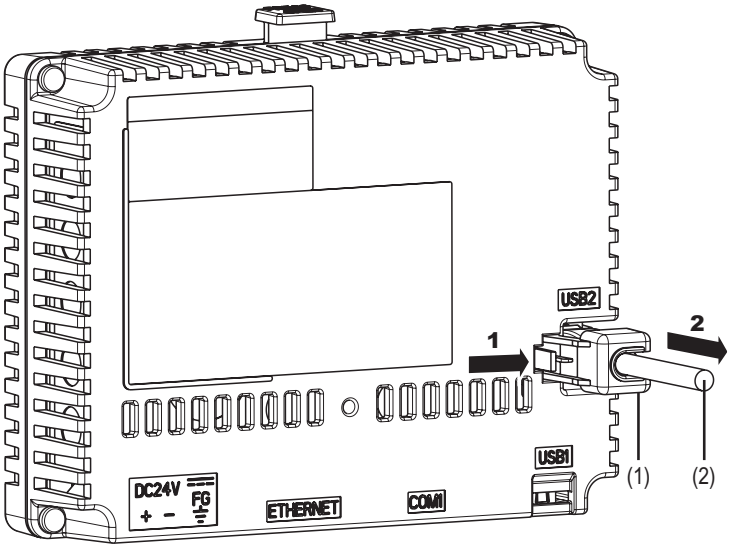

(1) USB Holder
(2) USB Cable

3.4 Ethernet Cable Connector

Presentation

Introduction

The HMI STU 655 comes equipped with an IEEE802.3 compliant Ethernet interface, that transmits and receives data at 10 Mbps or 100 Mbps.

Ethernet Cable Connector

The following illustration displays the location of the RJ45 Ethernet cable connector:

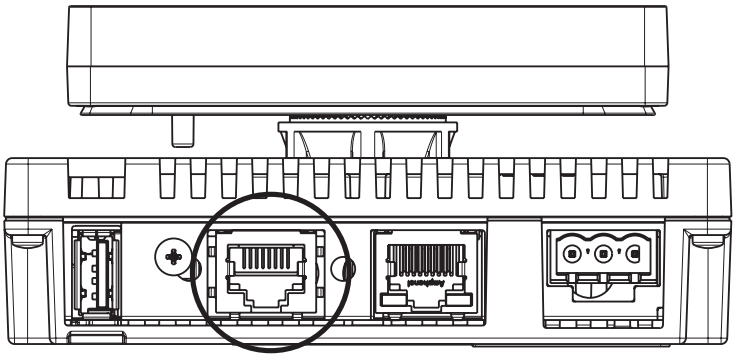

Do not confuse the RJ45 Ethernet connector with the RJ45 COM1/COM2 serial port.

NOTE: Ethernet networks must be installed by a trained and qualified person.

1:1 connections must be made with a hub or a switch. It is possible to use the 1:1 connection with a cross cable depending on the connected PCs and network cards.

Setting and Debugging

II

Overview

This part describes the settings available on the target machine as well as how to debug the unit.

What's in this Part?

This part contains the following chapters:

Chapter	Chapter Name	Page
4	Setting and Debugging	67
5	Troubleshooting	77
6	Maintenance	83

Setting and Debugging

4

Overview

This chapter presents the settings on the HMI STU 655 units.

What's in this Chapter?

This chapter contains the following topics:

Topic	Page
Types of Settings	68
System Settings	69
Offline Settings	72
Diagnostics Settings	75

Types of Settings

Introduction

You can use the **Settings** menu to configure the unit.

Depending on how you use your HMI STU 655, you can display the **Settings** menu using three different methods:
- Use an action,
- Touch the top-left corner of the panel when powering up,
- Touch two corners of the panel successively while the application is running.

You can select which methods your application uses in the Vijeo Designer editor's Target properties.

Calling Up the Settings Menu

Step	Action
1	Set up any combination of the following methods for displaying the **Settings** menu. ● Action: Create a switch and add the Configuration System Operation. See the Vijeo Designer online help for more information on creating a switch. ● Top-Left Corner: In **Target** properties, set **To Configuration** to either **Top Left Corner** or **Top Left/2 Corner**. ● Touch two corners successively: In **Target** properties, set **To Configuration** to either **2 Corner** or **Top Left/2 Corner**. If you set **To Configuration** to **None** and do not create a switch to display the **Settings** menu, then there is no way to configure the unit at runtime.
2	Connect the power supply.
3	Depending on what you set up in Step 1, you can display the **Configuration** menu using one of the following methods: ● Action: Touch the switch set up with the Configuration system operation. ● Top-Left Corner: Touch the top-left corner of the screen within ten seconds after the unit begins starting up. ● Touch two corners successively: Touch successively the top left corner then the bottom right corner within half a second. The touch area is 50 dots by 50 dots. Vijeo Designer Runtime restarts and displays the Settings menu.
4	The **Settings** menu contains 3 tabs: **Offline**, **System**, **Diagnostics** and **To Run Mode**. Click a tab to display its settings.

System Settings

Introduction

You can change system settings while the user application is still running.

Stylus

Use the Stylus to calibrate the screen:

Step	Action
1	In the **Setting** menu, press the **System** tab.
2	Press the **Stylus** button.
3	Press the center of the cross several times to complete calibration of the screen.

Changing the Date/Time

Step	Action
1	In the **Setting** menu, press the **System** tab.
2	Press the **Date/Time** button.
3	Press any of the **Year**, **Month** or **Day** fields and a data entry keypad is displayed. Use this keypad to define the selected date setting.
4	Press any of the **Hour**, **Minutes** or **Seconds** fields and a data entry keypad is displayed. Use this keypad to define the selected time setting.
5	In the **Time Zone** tab press the up/down arrows to select the desired time zone.
6	Check the **Auto. adjust clock for daylight saving time** box to choose adjusting clock for daylight saving time changes automatically.
7	In the **DST** tab press the up/down arrows to select the desired daylight saving time type: ● **Date**: the DST is added, or subtracted, on the exact date chosen. ● **Rule**: the DST is added, or subtracted, on a specific weekday in the month.
8	Press the **Amount** field and a data entry keypad is displayed. Use this keypad to define the desired daylight saving time amount (minutes).
9	Press the **OK** button to validate your configuration or configure the parameters of daylight saving time by Date *(see page 70)* or by Rule *(see page 70)*.

Daylight Saving Time Setting by Date

If **Date** is selected in step 7 of Changing the Date/Time *(see page 69)*, follow this procedure to set the daylight saving time parameters:

Step	Action
1	Follow the procedure of Changing the Date/Time til step 9.
2	In **Add Time** press the up/down arrows to select the desired month and press the right field to display the keypad to define the desired day to add time. In **@** press any of the fields to display the keypad and define the hour to add time.
3	In **Subtract Time** press the up/down arrows to select the desired month and press the right field to display the keypad to define the desired day to subtract time. In **@** press any of the fields to display the keypad and define the hour to subtract time.

Daylight Saving Time Setting by Rule

If **Rule** is selected in step 7 of Changing the Date/Time *(see page 69)*, follow this procedure to set the daylight saving time parameters:

Step	Action
1	Follow the procedure of Changing the Date/Time til step 9.
2	In **Add Time** press the up/down arrows to select the desired day and the desired month to add tlme. In **@** press any of the fields to display the keypad and define the hour to add time.
3	In **Subtract Time** press the up/down arrows to select the desired day and the desired month to subtract time. In **@** press any of the fields to display the keypad and define the hour to subtract time.

Forcing a Restart

Step	Action
1	In the **Setting** menu, press the **System** tab.
2	Press the **Restart** button, the following message appears: **Are you sure you want to restart the operating system?**.
3	Press the **Restart** button to restart the unit or the **Cancel** button to return to the **System** menu.

Selecting a Language

The following table describes how to select the language used for the Settings menu, the run-time messages and user application.

Step	Action
1	In the **Setting** menu, press the **System** tab.
2	Press the **Language** button.
3	Press the up/down arrows to select the desired languages for: ● System, ● User Application, ● Keyboard Language. The languages available in the language settings are defined in the Vijeo Designer editor.
4	Press **OK** to validate.

Displaying Version Information

Step	Action
1	In the **Setting** menu, press the **System** tab.
2	Press the **Ver. Info** button, version information displays: ● Vijeo-Designer Runtime Version, ● Vijeo-Designer Version, ● build number.

Displaying Memory Statistics

Step	Action
1	In the **Setting** menu, press the **System** tab.
2	Press the **Memory** button. ● DRAM describes the amount of memory currently being used by the application. ● Main Flash indicates the amount of internal memory (flash memory) required to store the runtime system files and the user application.

Brightness Control

Step	Action
1	In the **Setting** menu, press the **System** tab.
2	Press the **Brightness** button.
3	Press the up/down arrows to adjust the brightness. **NOTE:** Reducing the brightness could increase the life span of the backlight.

Offline Settings

Introduction

The offline settings cannot be changed while a user application is running.

Changing the Network Settings

Step	Action
1	In the **Setting** menu press the **Offline** tab.
2	Press the **Network** button, the following message appears: **Working with Offline Settings will stop the user application and runtime. Continue?**
3	Press the **OK** button to restart the system or the **Cancel** button to return to the **System** menu.
4	In the **Static IP** tab, press any of **IP Address**, **Subnet Mask** or **Default Gateway** fields, a numerical keypad displays, enter the desired parameters and validate by pressing **Enter** button.
5	In the **DHCP** tab, press the **Enable DHCP** checkbox to obtain configuration information from the network. This reduces system administration workload, allowing devices to be added to the network with little or no manual intervention.
6	In the **MAC/DNS** tab: ● Press **Obtain DNS Setting** checkbox to translate names into IP addresses. ● Press any of **IP Address** fields, a numerical keypad displays, entry the desired IP address and validate by **Enter** button.
7	In **Static IP** tab press the **Ok** button to validate.

Changing the Buzzer Settings

Step	Action
1	In the **Setting** menu press the **Offline** tab.
2	Press the **Buzzer** button, the following message appears: **Working with Offline Settings will stop the user application and runtime. Continue?**
3	Press the **OK** button to restart the system or the **Cancel** button to return to the **System** menu.
4	Press the desired buzzer mode. The factory setting is **Pressing Touch Object**. ● **None**: Selecting this turns the buzzer off. ● **When Press Touch Object**: The buzzer only sounds when a Touch Object is pressed.

Changing Backlight Control

Step	Action
1	In the **Setting** menu press the **Offline** tab.
2	Press the **Backlight** button, the following message appears: **Working with Offline Settings will stop the user application and runtime. Continue?**
3	Press the **OK** button to restart the system or the **Cancel** button to return to the **System** menu.
4	In the **Backlight** control, define the backlight operations. ● **Wait**: To extend the life of the backlight, you can set up the unit so that it turns off the backlight when the panel is inactive (idle) for the defined period of time, (Idle means the unit panel has not been pressed). The factory setting for this item is off. ● **Enable Touch if Backlight Burned Out**: This setting defines whether the press panel is enabled or disabled when a backlight burnout is detected. When this feature is cleared and the backlight burns out, press inputs are ignored to prevent operation detected errors. The factory setting for this item is off.
5	To turn the **Backlight** off automatically after a specified period of time, press the **Wait** checkbox and then set the idle time.

Self Test

Step	Action
1	In the **Setting** menu, press the **Offline** tab.
2	Press the **Self Test** button, the following message appears: **Working with Offline Settings will stop the user application and runtime. Continue?**
3	Press the **OK** button to restart the system or the **Cancel** button to return to the **System** menu.
4	In the **Self Test** control, press: ● **Char. Pattern**: to check the characters in each font set available on the unit. Use this test when characters (usually 2-byte characters) do not display properly. **Ok** appears if there is no detected error. **NG** appears if there is a detected error. ● **Disp. Pattern**: to test your LCD screen with some graphical test patterns. ● **Touch Panel**: to test the touch panel cells. Each cell highlights when it is pressed during the test. ● **COM 1**: to test the COM 1 port connector. **Ok** appears if there is no detected error. **NG** appears if an error is detected. ● **Video memory**: to test hardware memory.

Driver Configuration

Step	Action
1	In the **Setting** menu, press the **Offline** tab.
2	Press the **IO Manager** button, the following message appears: **Working with Offline Settings will stop the user application and runtime. Continue?**
3	Press the **OK** button to restart the system or the **Cancel** button to return to the **System** menu.
4	In the **IO Manager** control, press the **Driver Config** button.
5	In the **Driver Config** control: **Select Driver**: press the up/down arrow to select the desired driver.
6	Set the parameters of the selected driver.

Equipment Configuration

Step	Action
1	In the **Setting** menu, press the **Offline** tab.
2	Press the **IO Manager** button, the following message appears: **Working with Offline Settings will stop the user application and runtime. Continue?**
3	Press the **OK** button to restart the system, or the **Cancel** button to return to the **Setting** menu.
4	In the **IO Manager** control, press the **Equipment Config** button.
5	In the **Equipment Config** control: **Select Equipment**: press the up/down arrow to select the desired equipment.
6	Set the parameters of the selected equipment.

Diagnostics Settings

Introduction

The HMI STU 655 units are equipped with a number of diagnostic features that can be used to check the systems and the interfaces for any problems.

Diagnostics

See the Vijeo Designer online help for information on accessing the **Diagnostics Settings** menu.

Variables

Use the **Variable** menu to check that the application is running correctly. The following table describes how to get to the **Variable** menu:

Step	Action
1	In the **Settings** menu, press the **Diagnostics** tab.
2	Press the **Variable** button.
3	**Select Equipment**: press the up/down arrow to select the equipment whose variables you want to test.
4	In the **Variable** menu, press the **Go Offscan** button, the following message appears: **Warning: Entering the Variable Test screen pauses communication with all equipment. Continue?**
5	Press the **OK** button to restart the system, or the **Cancel** button to return to the **Variable** menu.
6	If the **Go Onscan** is pressed, the test reads the value for each variable associated with the selected equipment. If any of the variables detects a problem, because of a detected error in the equipment or a time-out, the event log displays a message with the name of the variable.
7	After you complete testing variables from one equipment, you can continue testing variables for other equipment connected to the target machine.
8	Alternatively, you can test all equipment at once by selecting **Test All** in the Select Equipment drop-down list.
9	Press the **Return** button to return to the **Diagnostics** menu.

Statistics

Use the **Statistics** menu to check the connection between equipment. The following table describes how to get to **Statistics** menu:

Step	Action
1	In the **Settings** menu, press the **Diagnostics** tab.
2	Press the **Statistics** button. **NOTE:** When you write any value to this system control word, press the **Rollover** button to: ● Copy the values in the current statistic variables to the previous statistic variables. ● Reset current statistic variables to zero.
3	In **Show Stats for:** press the up/down arrow to select the equipment whose variables you want to show statistics for.
4	Press the right arrow button to view the next display.
5	Press the **Go Offscan** button to start the test.
6	Press the right arrow button to view the next display.
7	**Total Good**: the total number of received variables without detected error. **Total Bad**: the total number of detected errors of all types. **Total Count**: Total Good + Total Bad. **No Reply**: no reply was received in response to the request. **Chksum Fail**: received a request or response **(1)** with an incorrect checksum. **Wrong Addr.**: received a request or response **(1)** with an incorrect address. **Error Resp.**: received a detected error response from the equipment. **(1)**: Master-type drivers send out requests and receive responses. Slave-type drivers receive requests and send responses.
8	Press the next arrow button to view the next display.
9	**Inv. Resp.**: received a response that contained a protocol detected error. **Init. Fail**: initializing communications with the equipment was unsuccessful. **Write Fail**: writing a new value to the equipment was unsuccessful. **Intrn Error**: internal driver detected error indicates improper driver configuration or driver problem. **Xmit Fail**: transmitting a request or response was unsuccessful. **Unsupp. Req.**: received a request for an unsupported service. **Inv. Request**: received a request that contained a protocol detected error.
10	Press the **Return** button to return to the **Diagnostics** menu or the previous arrow button to view the previous display.

Troubleshooting

5

Overview

This chapter describes how to find and resolve detected problems with the HMI STU 655 units.

What's in this Chapter?

This chapter contains the following topics:

Topic	Page
Troubleshooting Checklists	78
Self Test List	81

Troubleshooting Checklists

Introduction

When there is a detected problem, go through the checklist and follow the instructions given.

Here are the main detected problems that may occur when using HMI STU 655 unit.

- Panel display is blank,
- Connected equipment cannot be used,
- Panel does not respond or responds very slowly,
- Panel beeps when powered on,
- Cannot change the date or time.

NOTE: Contact your local Schneider Electric vendor or your local distributor.

Panel Display is Blank

If the unit display is blank, perform the following check steps:

Step	Check/Operation	Solution
1	Are all Vijeo Designer screens downloaded?	You may have to download the screens again.
2	Is the Initial Panel ID set up correctly in Vijeo Designer?	Enter the Initial Panel ID in the Vijeo Designer editor and download again.
3	Is the unit using the correct rated voltage?	Verify the power supply connections and levels.
4	Is the power supply off or disconnected?	Follow the instructions in this manual for reconnecting the power supply.
5	Is the backlight lit?	Potential detected problem with the unit. Contact your local Schneider Electric distributor.
6	Is the detected problem resolved?	If none of the previous steps fixed the blank panel display detected problem, then verify the hardware.

Connected Equipment Cannot be Used

If the unit does not communicate with connected equipment, perform the following check steps:

Step	Check/Operation	Solution
1	Is the power supply off or disconnected?	Verify the power supply connections and levels.
2	Do the **Driver** and **Equipment** settings in Vijeo Designer match the actual equipment you are trying to communicate with?	In the Vijeo Designer editor Navigator window's **Project** tab, expand the I/O Manager node to enter the correct configuration settings for the Driver and Equipment nodes.
3	Is the communication cable connected correctly?	Refer to the associated protocol manual for information about cable diagrams.
4	Is the detected problem resolved?	If none of the previous steps fixed the communication detected problem, then verify the hardware.

Unit does not respond when pressed

If the unit is either not responding when pressed or if its response time is very slow, perform the following check steps:

Step	Check/Operation	Solution
1	Disconnect all the cables except the power cable.	-
2	In the **Settings** menu, press the **Offline** tab and then press the **Self Test** icon. Run the Touch Panel test.	If the test is unsuccessful, there is a detected problem with the hardware.

Step	Check/Operation	Solution
3	If touch response is slow, does it happen on a specific panel?	If the panel displays the values of a large number of equipment variables, you may want to redesign the panel and separate the variables into different panels and download again.
4	If touch response is slow, the target CPU may be very busy communicating with external equipment.	To resolve this detected problem, try each of the following in the Vijeo Designer editor and download again. ● If you are using serial communication, verify the communication speed between the target and equipment is optimized. ● In the equipment or scan group properties, reduce the Scan Rate to Slow. This will reduce the frequency of variable updates to 1000 ms. ● If you use many equipment variables in application scripts, you may want to change the script to a panel script so that the variables are active only when the information is necessary. If none of the above works, then you may have to reduce the number of external variables in the project. If none of the proposed options work, contact your Schneider Electric Technical Support for optimizing your project.

Target beeps when powered ON

A continuous beep from the target means that system files are corrupted. To resolve this detected problem, go to the Vijeo Designer Start menu and run Recovery on the target machine.

Self Test List

Introduction

The HMI STU 655 units are equipped with a number of diagnostic features that can be used to check the systems and the interfaces for any detected s.

Self Test

From the **Settings** menu, press the **Offline** button and then the **Self Test** icon. **Self Test** menu appears. See the Vijeo Designer online help for information on accessing the **Offline** tab.

Self Tests

The following tests can be accessed from the **Self Test** menu.

Test	Description
Char. Pattern	Checks the characters in each font set available on the unit. Use this test when characters (usually 2-byte characters) are not displayed properly. **OK** appears if there is no detected error; **NG** appears if there is a detected error.
Disp. Pattern	Use this test when your drawings are not displayed properly.
Touch Panel	Tests the touch panel cells. Each cell highlights when it is pressed during the test.
COM 1	Checks that the serial port (RS-232C and RS-485) is working properly. To run the check, you may need to connect a loopback cable (see below). **OK** appears if there is no detected error; a detected error message appears if there is an error.
Video Memory	Use this test to check the video memory (memory used for screen display). Run this test when the screen does not display properly. **OK** appears if there is no detected error; **NG** appears if there is a detected error.

Wiring for COM 1 tests

When testing the serial port, depending on which port and which communication format you are testing, you may need to attach a loopback cable with wiring as defined below:

RS-232C	RS-485
HMI STU 655 in COM1 RXD 1 TXD 2	Not available.

Maintenance

6

Overview

This chapter explains how to maintain your HMI STU 655 units.

What's in this Chapter?

This chapter contains the following topics:

Topic	Page
Regular Cleaning	84
Periodic Check Points	86

Regular Cleaning

Cleaning the display

CAUTION

EQUIPMENT DAMAGE

- Power off the unit before cleaning it.
- Do not use hard or pointed objects to operate the touch panel, since it can damage the panel surface.
- Do not use paint thinner, organic solvents, or a strong acid compound to clean the unit.

Failure to follow these instructions can result in equipment damage.

When the surface or the frame of the display gets dirty, soak a soft cloth in water with a neutral detergent, wring the cloth tightly and wipe the display.

Chemical Substances

The products in the following table can be used when cleaning the unit:

Kinds of fluid	Company	Product designation	Concentration	Temperature °C (°F)	pH Value
Cleaning agents in the food and beverage industry	Ecolab	Topmaxx 422	5	40 (104)	1% : pH=13
	Ecolab	P3 Topax M 95	5	40 (104)	1% : pH=12.3
	Ecolab	P3 Oxonia Active	3	40 (104)	
	Ecolab	P3 Topax 52 FR	5	40 (104)	1% : pH=2
	Ecolab	P3 Topax 36	5	40 (104)	
	Ecolab	P3 Luboklar MH	0.7	40 (104)	
	Johnson Diversey	Divosan 2000	1	25 (77)	100% : pH=7
	Johnson Diversey	Diverfoam Septiplus	5	25 (77)	3% : pH=8.3
	Johnson Diversey	Acifoam	5	25 (77)	1% : pH=2.2
	Johnson Diversey	HD Plus Foam	5	25 (77)	1% : pH=12.9
	Johnson Diversey	Oxofoam	5	25 (77)	1% : pH=12.7
	Johnson Diversey	Endoroplus VE6	5	25 (77)	1% : pH=12.1
	Johnson Diversey	Endoroforce VE2	5	25 (77)	1% : pH=12.5
	Johnson Diversey	Endorocid VE10	5	25 (77)	1% : pH=2
Diverse		Water	100	50 (122)	
		Milk	100	25 (77)	
		Methanol	10	25 (77)	
Oils		ASTM 1	100	25 (77)	
		IRM 902	100	25 (77)	
		IRM 903	100	25 (77)	
		Cerechlor/IRM 903	50/50	25 (77)	
		Syntopon B	3	25 (77)	
Cutting oils	Ecocut	HBN 16LE	Pure	25 (77)	
	Quakercool	7101H	Emulsion	25 (77)	
	Quakercool	2769	Soluble / Synthetic	25 (77)	
	Quakercool	3750H	Micro-emulsion	25 (77)	

Periodic Check Points

Operation Environment

Refer to the Environmental Specifications *(see page 26)*.

Electrical Specifications

The input voltage must be within 20.4 to 28.8 Vdc.

Related Items

- Are all power cords and cables connected properly? Are there any loose cables?
- Are all mounting brackets holding the unit securely?
- Are there scratches or traces of dirt on the installation gasket?

Index

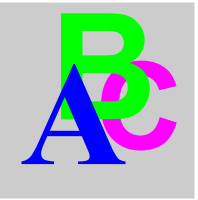

Symbols

Peripherals
    Edit Mode, *23*

A

Accessories, *16*

C

Certifications and Standards, *21*
Connecting the Power Cord, *47*
Connecting the Power Supply, *50*

D

Diagnostics Settings, *75*

E

Edit Mode Peripherals, *23*
Ethernet
    Cable connector, *64*

G

Grounding, *52*

I

Installation
    Procedures, *43*

M

Maintenance
    Check points, *86*
    Cleaning, *84*

P

Part number
    HMI STU 655, *12*
Parts Identification and Functions, *18*
Power plug, *47*

S

Self Test, *81*
Settings
    menu, *68*
Specifications
    COM, *33*
    COM1, *32*, *33*
    Display, *29*
    General, *26*
    Interfaces, *32*
    Memory, *32*, *32*
    USB, *32*, *32*
System Settings, *69*

T

Troubleshooting, *78*

U

USB
- Data Transfer Cable, *56*
- Mini-B, *61*
- Port, *55*
- Standard A, *58*