MAGELIS Compact PC BOX MPCKN02 Series

User Manual

07/2010

35016167.01

www.schneider-electric.com

Schneider Electric

The information provided in this documentation contains general descriptions and/or technical characteristics of the performance of the products contained herein. This documentation is not intended as a substitute for and is not to be used for determining suitability or reliability of these products for specific user applications. It is the duty of any such user or integrator to perform the appropriate and complete risk analysis, evaluation and testing of the products with respect to the relevant specific application or use thereof. Neither Schneider Electric nor any of its affiliates or subsidiaries shall be responsible or liable for misuse of the information contained herein. If you have any suggestions for improvements or amendments or have found errors in this publication, please notify us.

No part of this document may be reproduced in any form or by any means, electronic or mechanical, including photocopying, without express written permission of Schneider Electric.

All pertinent state, regional, and local safety regulations must be observed when installing and using this product. For reasons of safety and to help ensure compliance with documented system data, only the manufacturer should perform repairs to components.

When devices are used for applications with technical safety requirements, the relevant instructions must be followed.

Failure to use Schneider Electric software or approved software with our hardware products may result in injury, harm, or improper operating results.

Failure to observe this information can result in injury or equipment damage.

© 2010 Schneider Electric. All rights reserved.

Table of Contents

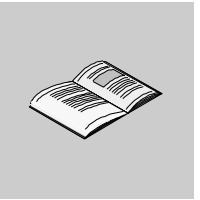

Safety Information **5**
About the Book **7**
Part I General Overview **13**
Chapter 1 Important Information **15**
Federal Communications Commission Radio Frequency Interference Statement - For U.S.A. 16
Qualified Personnel 17
Safety Information for the UK 18
Certifications and Standards 20
European (CE) Compliance 21
Chapter 2 Physical Overview **23**
Package Contents 24
Compact PC BOX Description 26
Interface Specification 29
Chapter 3 Characteristics **31**
Structural and Electrical Characteristics 32
Flash Disk Characteristics 34
Environmental Characteristics 35
Chapter 4 Dimensions/Installation **37**
Dimensions 38
Preparing to install the Compact PC BOX 42
Part II Implementation **49**
Chapter 5 Getting Started **51**
First power-up 51
Chapter 6 Main Power Connection **53**
Grounding 54
Connecting the AC Power Cord 57
Chapter 7 Configuration of the BIOS **59**
Accessing the BIOS 59

Chapter 8 Hardware Modifications 65
Before Modifications 66
Removing the Compact PC BOX's Cover 68
Compact PC BOX Internal View 69
Installing a Larger RAM Chip 70
Expansion Board (PCI) Installation 72
Compact Flash (CF) Card Installation and Removal 74
USB Holder Attachment/Removal 76
Part III Installation 79
Chapter 9 Connections to PLCs. 81
Connection to PLCs 81
Chapter 10 System Monitoring 83
System Monitor Overview 84
System Monitor Property 88
System Monitor Interface 93
Chapter 11 Maintenance 99
Reinstallation Procedure 100
Regular Cleaning and Maintenance. 102
Chapter 12 Troubleshooting. 105
Troubleshooting 105
Part IV Appendices 107
Chapter 13 Accessories 109
Accessories for the Compact PC BOX 109
Index 111

Safety Information

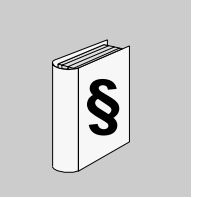

Important Information

NOTICE

Read these instructions carefully, and look at the equipment to become familiar with the device before trying to install, operate, or maintain it. The following special messages may appear throughout this documentation or on the equipment to warn of potential hazards or to call attention to information that clarifies or simplifies a procedure.

The addition of this symbol to a Danger or Warning safety label indicates that an electrical hazard exists, which will result in personal injury if the instructions are not followed.

This is the safety alert symbol. It is used to alert you to potential personal injury hazards. Obey all safety messages that follow this symbol to avoid possible injury or death.

⚠ DANGER

DANGER indicates an imminently hazardous situation which, if not avoided, **will result in** death or serious injury.

⚠ WARNING

WARNING indicates a potentially hazardous situation which, if not avoided, **can result in** death or serious injury.

⚠ CAUTION
CAUTION indicates a potentially hazardous situation which, if not avoided, **can result in** minor or moderate injury.

CAUTION
CAUTION, used without the safety alert symbol, indicates a potentially hazardous situation which, if not avoided, **can result in** equipment damage.

PLEASE NOTE

Electrical equipment should be installed, operated, serviced, and maintained only by qualified personnel. No responsibility is assumed by Schneider Electric for any consequences arising out of the use of this material.

A qualified person is one who has skills and knowledge related to the construction and operation of electrical equipment and the installation, and has received safety training to recognize and avoid the hazards involved.

About the Book

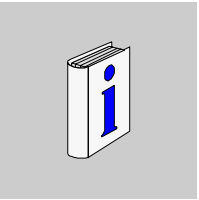

At a Glance

Document Scope

This manual describes the different configurations and usage of the Compact PC BOX.

This computer is designed to operate in an industrial environment and features the very latest technologies.

There are 5 versions of the Compact PC BOX included in the MPCKN02 series of Magelis Industrial PCs.

The product references are:

- MPC KN02 NAX 00N
  - 100...240 Vac
  - ULV 1.0 GHz Celeron M processor
  - > 40 GB Hard Disk
  - All versions of Windows® XP Pro, SP2 and above
- MPC KN02 SAX 00N
  - 100...240 Vac
  - ULV 1.0 GHz Celeron M processor
  - > 8 GB Flash Disk
  - All versions of Windows® XP Pro, SP2 and above
- MPC KN02 NAX 00H
  - 100...240 Vac
  - ULV 1.0 GHz Celeron M processor
  - > 40 GB Hard Disk
  - All versions of Windows® XP Pro, SP2 and above, with Vijeo Designer Runtime

- MPC KN02 SAX 00H
  - 100...240 Vac
  - ULV 1.0 GHz Celeron M processor
  - > 8 GB Flash Disk
  - All versions of Windows® XP Pro, SP2 and above, with Vijeo Designer Runtime
- MPC KN02 MAX 00V
  - 100...240 Vac
  - ULV 1.0 GHz Celeron M processor
  - > 16 GB Flash Disk
  - All versions of Windows® XP Pro, SP2 and above, with Vijeo Citect Runtime (500 I/O)

The characteristics of the Compact PC BOX are detailed see *Characteristics, page 31*.

Part Number Description

Your product may have a Part Number not included in the enclosed User Manual. The commercial Part Number mentioned in the User Manual are those at the introduction of the product range. New part Numbers may be added during the life cycle of the product range. The new products are similar to products described in the User Manual but with changes, such as storage device size or type, memory size or bundled application software. The differences from the initial part numbers are indicated below:

	MPC		**K**		**N**		**0**		**2**		•		•		•		•		•		•	
Reference	1		2		3		4		5		6		7		8		9		10		11	

Reference Number	**Character Name**	**Possible Value**
1	Part number radical	MPC **NOTE:** No change over product range
2	Product Type	K=Compact **NOTE:** No change over product range
3	Front Panel Type	N = None T = Touch screen **NOTE:** No change over product range
4	Screen size	0 = None 1 = 8.4” 2 = 12” 5 = 15” 9 = 19”

Reference Number	Character Name	Possible Value
5	CPU Type	1 = Low End 2 = Mid range 5 = High End
6	Hardware option	N = None M = HDD replaced by SSD 15GB S = HDD replaced by SSD 8GB • = HDD replaced by other storage device type and or size
7	Power Supply	A = AC D = DC
8	Operating System	J = XP embed X = XP Pro • = Other operating system
9	Hardware iteration	0 = Initial 1 = First 2 = Second etc
10	Service	0 = None
11	Bundled Software	N = None V = Vijeo Citect Run Time 500 I/O Full L = Vijeo Citect Run Time 1200 I/O Lite H = Vijeo Designer • = Other application software

NOTE: All instructions applicable to the enclosed product and all safety precautions must be observed.

Validity Note

This documentation is valid for Magelis Compact PC BOX MPCKN02 Series

The technical characteristics of the device(s) described in this manual also appear online. To access this information online:

Step	Action
1	Go to *www.schneider-electric.com*
2	In the **Search** box on the home page, type a model number. Do not type any blank spaces in the model number. To get information on a grouping similar modules, you can use the characters **; do not use dots or *xx*'s.
3	Under **All**, click **Products** →**Product Datasheets** and select the model number that interests you.
4	To save or print a data sheet as a .pdf file, click **Export to PDF**.

The characteristics presented in this manual should be the same as those that appear online. In line with our policy of constant improvement we may revise content over time to improve clarity and accuracy. In the event that you see a difference between the manual and online information, use the online information as your reference.

Registered Trademarks

PL7, Vijeo Designer, Vijeo Citect and Unity are registered trademarks of Schneider Electric.

Microsoft® and Windows® are registered trademarks of Microsoft Corporation.

Intel®, Celeron®, and Pentium® are registered trademarks of Intel Corporation.

IBM® is a registered trademark of International Business Machines Corporation.

Related Documents

Title of Documentation	Reference Number
Installation Guide for Magelis Industrial PC and Terminals	35012221
Vijeo Designer Tutorial	35007035
NEMA ICS 1.1	–
Magelis Industrial PC and Terminals - Read me	35012220

You can download these technical publications and other technical information from our website at www.schneider-electric.com.

Product Related Information

⚠ DANGER

HAZARD OF ELECTRIC SHOCK, EXPLOSION OR ARC FLASH

- Remove all power from the device before removing any covers or elements of the system, and prior to installing or removing any accessories, hardware, or cables.
- Unplug the power cable from both the Compact PC BOX unit and the AC power supply.
- Always use a properly rated voltage sensing device to confirm power is off.
- Replace and secure all covers or elements of the system before applying power to the unit.
- Use only the specified voltage when operating your MPCKN02-series Compact PC BOX. This unit is designed to use 100...240 Vac.

Failure to follow these instructions will result in death or serious injury.

⚠ WARNING

LOSS OF CONTROL

- The designer of any control scheme must consider the potential failure modes of control paths and, for certain critical control functions, provide a means to achieve a safe state during and after a path failure. Examples of critical control functions are emergency stop and overtravel stop.
- Separate or redundant control paths must be provided for critical control functions.
- System control paths may include communication links. Consideration must be given to the implications of unanticipated transmission delays or failures of the link.(1)
- Each implementation of a Compact PC BOX must be individually and thoroughly tested for proper operation before being placed into service.

Failure to follow these instructions can result in death, serious injury, or equipment damage.

(1) For additional information, refer to *NEMA ICS 1.1* (latest edition), *"Safety Guidelines for the Application, Installation, and Maintenance of Solid State Control" and to NEMA ICS 7.1 (latest edition), "Safety Standards for Construction and Guide for Selection, Installation and Operation of Adjustable-Speed Drive Systems" or their equipment governing your particular location.*

NOTE: The MPCKN02-series Compact PC BOX is a highly configurable device and is not based on a real-time operating system. Changes to the software and settings of the following must be considered new implementations as discussed in the message above. Examples of such changes include:

- System BIOS
- System Monitor (See *System Monitoring, page 83*)
- Operating system
- Installed hardware
- Installed software

User Comments

We welcome your comments about this document. You can reach us by e-mail at techcomm@schneider-electric.com.

General Overview

I

Subject of this Part

This part provides an overview of the Magelis Compact PC BOX product.

What's in this Part?

This part contains the following chapters:

Chapter	Chapter Name	Page
1	Important Information	15
2	Physical Overview	23
3	Characteristics	31
4	Dimensions/Installation	37

Important Information

1

General

This chapter describes safety aspects which are specific to the operation of the MPCKN02-series Compact PC BOX.

What's in this Chapter?

This chapter contains the following topics:

Topic	Page
Federal Communications Commission Radio Frequency Interference Statement - For U.S.A.	16
Qualified Personnel	17
Safety Information for the UK	18
Certifications and Standards	20
European (CE) Compliance	21

Federal Communications Commission Radio Frequency Interference Statement - For U.S.A.

FCC Radio Interference Information

This equipment has been tested and found to comply with the Federal Communications Commission (FCC) limits for a Class A digital device, pursuant to Part 15 of the FCC Rules. These limits are designed to provide reasonable protection against harmful interference in a residential installation. This equipment generates, uses, and can radiate radio frequency energy and, if not installed and used in accordance with the instructions, may cause or be subject to interference with radio communications. To minimize the possibility of electromagnetic interference in your application, observe the following two rules:

- Install and operate the Compact PC BOX in such a manner that it does not radiate sufficient electromagnetic energy to cause interference in nearby devices.
- Install and test the Compact PC BOX to ensure that the electromagnetic energy generated by nearby devices does not interfere with the Compact PC BOX's operation.

⚠ WARNING

ELECTROMAGNETIC / RADIO INTERFERENCE

Electromagnetic radiation may disrupt the Compact PC BOX's operations, leading to unintended equipment operation. If electromagnetic interference is detected:

- Increase the distance between the Compact PC BOX and the interfering equipment.
- Reorient the Compact PC BOX and the interfering equipment.
- Reroute power and communication lines to the Compact PC BOX and the interfering equipment.
- Connect the Compact PC BOX and the interfering equipment to different power supplies.
- Always use shielded cables when connecting the Compact PC BOX to a peripheral device or another computer.

Failure to follow these instructions can result in death, serious injury, or equipment damage.

Qualified Personnel

General

You must permit only qualified personnel to install, operate and maintain these products. The following personnel can be designated as "qualified personnel":

- at the application design level, engineering department personnel who are familiar with automation safety concepts (for example, a design engineer),
- at the equipment implementation level, personnel who are familiar with the installation, connection and commissioning of automation equipment (for example, an installation assembly or cabling engineer, or a commissioning technician),
- at the operation level, personnel who are experienced in the use and control of automation and computing equipment (for example, an operator),
- as far as preventive or corrective maintenance is concerned, personnel trained and qualified in regulating or repairing automatic and computing devices (for example an operating technician, or an after-sales service technician, etc.).

Safety Information for the UK

Earthing and Wiring

⚠ WARNING

UNGROUNDED EQUIPMENT

- This apparatus must be earthed.
- Use a three-pin plug with a standard three-pin power point.
- Use only three-core extension cords.

Failure to follow these instructions can result in death, serious injury, or equipment damage.

⚠ WARNING

IMPROPER WIRING

Wire the equipment as described below:

- Green and Yellow: Earth.
- Blue: Neutral.
- Brown: Live.
- The Green and Yellow wire must be connected to the terminal in the plug marked by the letter E or by the safety earth symbols colored Green, or Green and Yellow.
- The blue wire must be connected to the terminal which is marked by the letter N or colored Black.
- The brown wire must be connected to the terminal which is marked with the letter L or colored Red.

Failure to follow these instructions can result in death, serious injury, or equipment damage.

NOTE: The fact that the equipment operates satisfactorily does not imply that the power point is earthed. If you have any doubt about the effective earthing or wiring the power point, consult a qualified electrician.

⚠ WARNING

INCOMPATIBLE POWER SYSTEM

Do not connect this equipment to an isolation transformer power system:

- An isolation transformer system is a system having no reference between live parts and Earth; the exposed conductive parts of the device frame and enclosure are earthed.
- An isolation transformer system is not permitted where the computer is directly connected to public supply systems in the UK.

Failure to follow these instructions can result in death, serious injury, or equipment damage.

Certifications and Standards

Agency Certifications

The following agencies have certified this product as meeting the standards listed afterwards.

North America:

- Underwriters Laboratories Inc., UL508, Industrial Control Equipment
- Canadian Standards Association, Specification C22.2, No. 142, Process Control Equipment

Compliance Standards

Schneider Electric tested this product for compliance with the following compulsory standards.

North America:

- Federal Communications Commission, FCC Part 15
- Underwriters Laboratories Inc., UL 60950, Information Technology Equipment

Europe: CE

- Directive 2006/95/EC (Low voltage)
  Directive 2004/108/EC (EMC)
- Programmable Controllers: IEC 61131-2
- EMI: EN55011 (Group 1, Class A) / IEC 61000-3-2, IEC 61000-3-3, IEC/EN 61000-6-4
- EMC: EN 61000-6-2

Australia:

- C'TICK N998
- Standard AS/NZS CISPR11

Qualification Standards

Schneider Electric voluntarily tested this product to additional standards. The additional tests performed, and the standards under which the tests were conducted, are specifically identified in *Environmental Characteristics, page 35*.

Hazardous Substances

This product is compliant with:

- WEEE, Directive 2002/96/EC
- RoHS, Directive 2002/95/EC
- RoHS China, Standard SJ/T 11363-2006

European (CE) Compliance

CE Compliance Note

The products described in this manual comply with the European Directives concerning Electromagnetic Compatibility and Low Voltage (CE marking) when used as specified in the relevant documentation, in applications for which they are specifically intended, and in connection with approved third-party products.

Physical Overview

2

Subject of this Chapter

This chapter provides a physical overview of the Compact PC BOX product.

What's in this Chapter?

This chapter contains the following topics:

Topic	Page
Package Contents	24
Compact PC BOX Description	26
Interface Specification	29

Package Contents

Items

The following items are included in the Compact PC BOX package. Before using the unit, please confirm that all items listed here are present.

Designation	Figure
MPC KN02 NAX00•	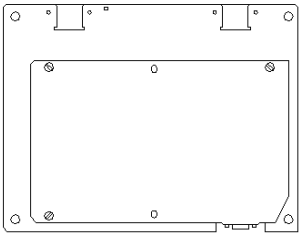
Installation Fasteners (2 per set)	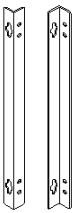
CD-ROM containing the software required to reinstall the Operating System, the Installation Guide and this User Manual documentation, and the MS Windows EULA.	
USB Cable Clamp x 2	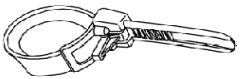
USB Holder x 1	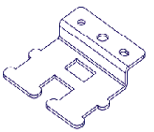

Designation	Figure
AC Power Cord with Terminal Block (US plug)	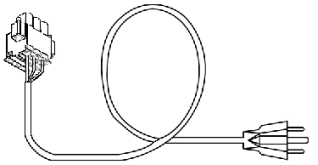
AC Power Cord with Terminal Block (EU plug)	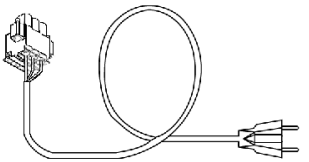

This unit has been carefully packed, with special attention to quality. However, should you find anything damaged or missing, please contact your local distributor immediately.

Compact PC BOX Description

Front View

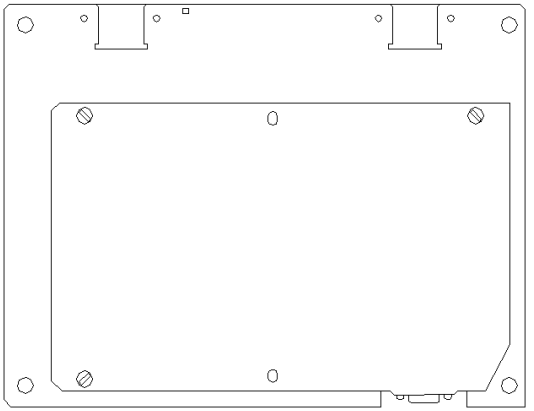

Rear View

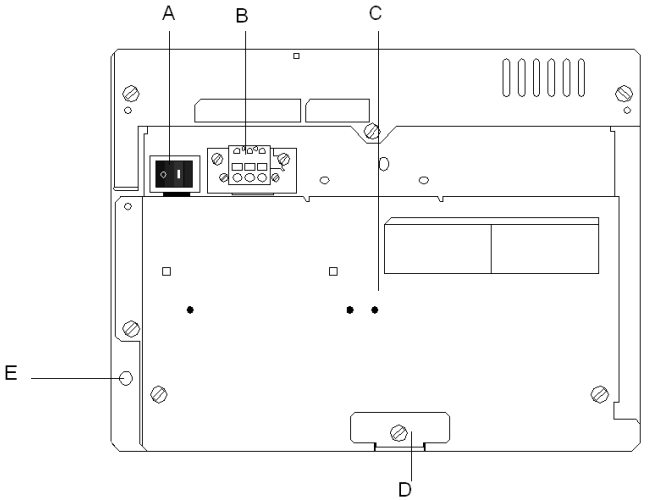

A Power Switch
B Power Supply Connector
C Expansion Board cover
D Expansion Board Locker
E Reset Switch: used to reboot the unit

Bottom View

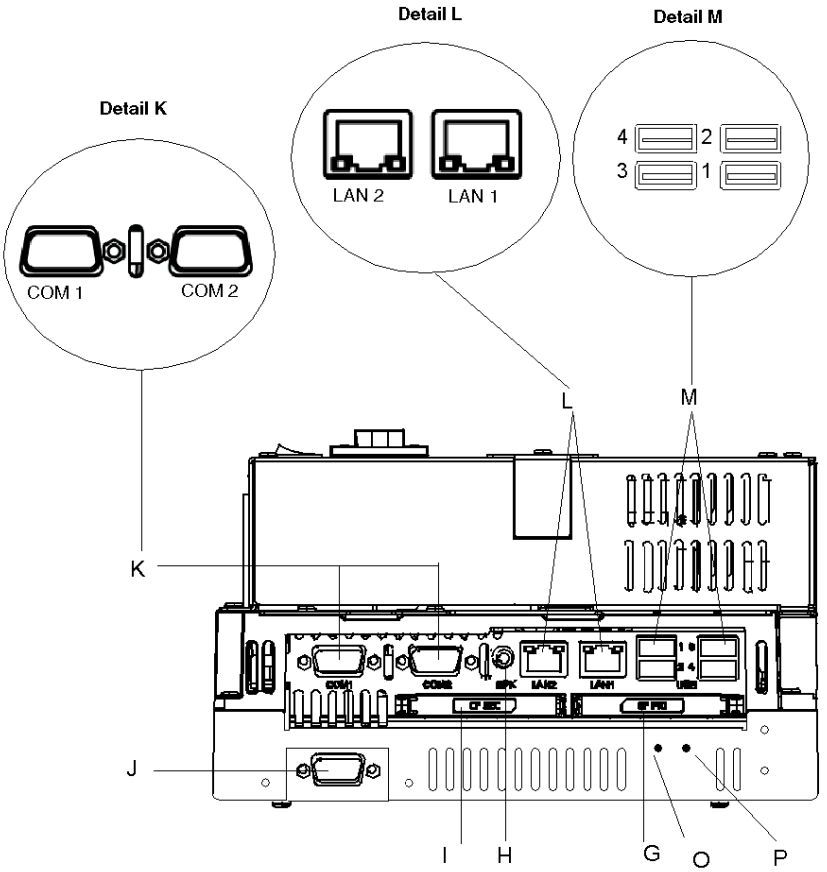

G Primary CF Card
H Speaker Output
I Secondary CF Card
J RGB video port: to connect external display
K COM 1 and COM 2
L Ethernet LAN1 10/100Base-T (RJ45)
L Ethernet LAN2 10/100/1000Base-T (RJ45)
M USB (4 ports)
O Power LED Status Lamp
- Green Lit: Normal
- Green Blinking: System is not running (Soft OFF state)
- Orange Lit: System Monitor Error

- Not Illuminated: Power is off

P Disk Access Lamp
- Green Lit: Access to IDE
- Not Illuminated: No Access to IDE

NOTE: Soft OFF: OS is shut down but the power line is still live. This is also called "S5 state". One of the merits of this state is that you can also use the "Wake on LAN" feature.

Sides View

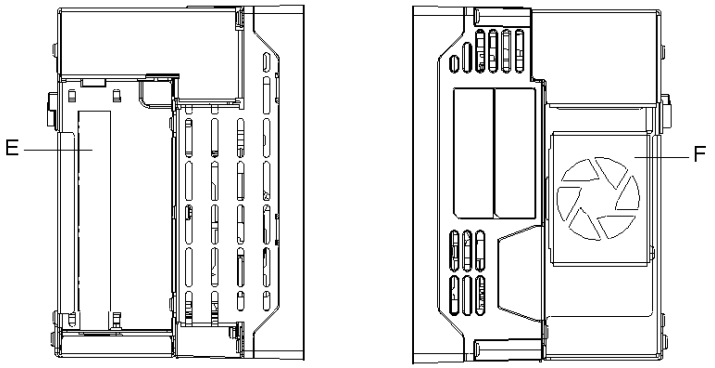

E Expansion unit interface (PCI unit)
F Cooling Fan

Interface Specification

Communication Connections

⚠ WARNING

EQUIPMENT DISCONNECTION OR UNINTENDED EQUIPMENT OPERATION

- Ensure that power, communication, and accessory connections do not place excessive stress on the ports. Consider the vibration environment when making this determination.
- Securely attach power, communication, and external accessory cables to the panel or cabinet.
- Use only commercially available USB cables.

Failure to follow these instructions can result in death, serious injury, or equipment damage.

Serial Interfaces

This interface (COM1 and COM2) is used to connect an RS-232C (serial) cable. A D-SUB 9 pin plug connector is used.

Pin Arrangement	Pin No.	RS-232C		
		Signal Name	**Direction**	**Meaning**
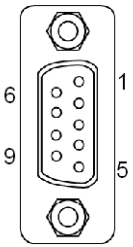	1	CD	Input	Carrier Detect
	2	RXD	Input	Receive Data
	3	TXD	Output	Send Data
	4	DTR	Output	Data Terminal Ready
	5	SG	–	Signal Ground
	6	DSR	Input	Data Set Ready
	7	RTS	Output	Request to Send
	8	CTS	Input	Send Possible
	9	RI	Input	Called status display (+5 Vdc)
	Shell	FG	–	Frame Ground (Common with SG)

Characteristics

3

Subject of this Chapter

This chapter lists the product characteristics.

What's in this Chapter?

This chapter contains the following topics:

Topic	Page
Structural and Electrical Characteristics	32
Flash Disk Characteristics	34
Environmental Characteristics	35

Structural and Electrical Characteristics

Introduction

The characteristics of the MPCKN02-series Compact PC BOX are given below:

Product Characteristics

Element	Characteristics
Processor	ULV Celeron M 1 GHz without cache (with Fan)
Video processor	Integrated Intel 855 GME video, sharing main memory. 8/16/32 bit color resolution at 1024x768
RAM	512 MB - 1 GB RAM (see *Accessories for the Compact PC BOX, page 109*)
SRAM	512 MB
Hard disk (HDD)	Capacity greater or equal to 40 GB IDE 2.5"
Flash disk (SSD)	Capacity greater or equal to 8 GB
Ethernet TCP/IP link	• LAN1: 10/100Base-T • LAN2: 10/100/1000Base-T
USB ports	4 x USB 2.0 (rear)
COM 1 serial port	RS232C (D-SUB 9 pin male)
COM 2 serial port	RS232C (D-SUB 9 pin male)
Extension card slot	1 x PCI 2.2 interface slot
CF Card Slot	2 Slots
Audio port	Speaker out (mini-jack connector)
Dimensions (WxHxD)	217 x 164 x 119 mm (8.54 x 6.46 x 4.68 in.)
Weight	3.5 Kg (7.71 lb.)

NOTE: If a USB high speed device such as a webcam or memory key isn’t recognized by the Compact PC BOX, or doesn't operate as expected, plug it into USB port #2 and leave USB port #1 empty.

Power Supply

Element	Characteristics
Supply voltage	100...240 Vac (range 85..265 Vac)
Frequency	50/60 Hz (range 47...63 Hz), EN61131-2 compliant
Consumption	120 VA (max.)
Short dips	20 ms (max.)

Element	Characteristics
Voltage endurance	1500 Vac 20 mA for 1 minute (Between charge and FG terminals)
Insulation resistance	10 MΩ or higher at 500 Vdc (Between charge and FG terminals)
PCI expansion slot capability	Board size 174.63 x 106.68 mm (6.88 x 4.2 in.) ● 5 Vdc, 1.5 A ● 12 Vdc, 0.5 A ● 12 Vdc, 0.1 A ● 3.3 Vdc, 0.5 A
PCI expansion board: Power consumption load	10.9 W (100%) between 5 °C (41 °F) and 45 °C (113 °F) (Surrounding Air Temperature). Linearly decreasing to 7.6 W (70%) between 45 °C (113 °F) and 50 °C (122 °F).

Operating Systems

The products are delivered with a pre-installed operating system according to the reference ordered.

The products have been tested with the following operating systems:

All versions of Microsoft® Windows® XP Pro SP2 and above

Pre-Installed Packs

Element	Characteristics
MPC KN02 NAX 00N	MPCKN02-series Compact PC BOX with: ● ULV Celeron M processor - 1 GHz ● Windows® XP Pro SP2 pre-installed
MPC KN02 SAX 00N	
MPC KN02 NAX 00H	MPCKN02-series Compact PC BOX with: ● ULV Celeron M processor - 1 GHz ● Windows® XP Pro SP2 pre-installed ● Vijeo Designer Runtime pre-installed
MPC KN02 SAX 00H	
MPC KN02 NAX 00V	MPCKN02-series Compact PC BOX with: ● ULV Celeron M processor - 1 GHz ● Windows® XP Pro SP2 pre-installed ● Vijeo Citect Runtime 500 I/O

Flash Disk Characteristics

Introduction

Three Compact PC BOX product references offer Flash Disk hard drives (also known as Solid-State Drives or SSDs). There is also a Flash Disk accessory available for use as a replacement or backup hard disk. All Flash Disk references are ATA-3 compliant and have no moving parts.

Characteristics

A Flash Disk (SSD) is a storage device based on semiconductors rather than rotating magnetic platters. The use of semiconductors allows a Flash Disk to perform normal storage functions while providing enhanced levels of performance and reliability. Flash Disk drives use the same industry-standard dimensions and data interfaces as conventional hard disk drives and may be used interchangeably in Compact PC BOX systems.

The references with Flash Disks share the same characteristics as other Compact PC BOX devices except as noted in the following table:

Characteristics	Values	Standards
Capacity	8 GB or higher	—
Shock resistance (in operation)	15 g over 11 ms, 3 shocks per axis	IEC 68-2-27 Ea test EN 61131-2 compliant
Shock component value	1000 g, half-sine, 0.5 ms duration, 50 g peak	MIL-STD-810F, Method 516.5, Procedure I
Vibration resistance (in operation)	3.5 mm amplitude from 10 to 57.6 Hz 1 g amplitude from 57.6 Hz to 150 Hz	61131-2 compliant
Vibration component value	16.3 g RMS	MIL-STD-810F, Method 514.5, Procedure I, Category 24

NOTE: The shock and vibration operating limits for a Compact PC BOX with a Flash Disk are higher than for references with conventional hard disks. If other Flash Disk and Compact PC BOX operating limits differ, the more restrictive limits apply.

Environmental Characteristics

Characteristics

The environmental characteristics of the MPCKN02-series Compact PC BOX are given below:

Characteristics	Value	Standards
Degree of Protection	IP 20	IEC 60529, NEMA 250, EN 61131-2
Pollution Degree	For use in Pollution Degree 2 environment	—
Surrounding air temperature during operation	5 ... 50 °C (41 ... 122 °F)	EN 61131-2 compliant
Storage temperature	–20 ...60 °C (–4 ...140 °F)	IEC 60068-2-2 tests Bb and Ab, IEC 60068-2-14 tests Na and EN 61131-2 compliant
Operating altitude	2000 m (6560 ft.) max	EN 61131-2
Vibration (storage)	3.5 mm amplitude from 5 to 9 Hz, 1 g amplitude from 9 Hz to 150 Hz	EN 61131-2
Vibration for Hard Disk models (in operation)	0.075 mm amplitude from 10 to 57.6 Hz, 1 g amplitude from 57.6 Hz to 150 Hz	EN 61131-2
Shock Resistance (in operation)	15 g over 11 ms	IEC 60068-2-27 Ea test and EN 61131-2 compliant
Humidity	10...85 % RH ● Wet bulb temperature: 29 °C (84 °F) max ● No condensation	—
Immunity to interference	High frequency interference	EN 61131-2, IEC 61000-4-3/6 level 3
	Electromagnetic waves	Class A/EN 55022/55011
Additional Standards	Information Technology Equipment	IEC 60950
	Industrial Control Equipment	UL 508, CSA 22.2 No. 142

Dimensions/Installation

4

Subject of this Chapter

This chapter concerns the dimensions and installation of the MPCKN02-series Compact PC BOX.

What's in this Chapter?

This chapter contains the following topics:

Topic	Page
Dimensions	38
Preparing to install the Compact PC BOX	42

Dimensions

Dimensions of the Compact PC BOX

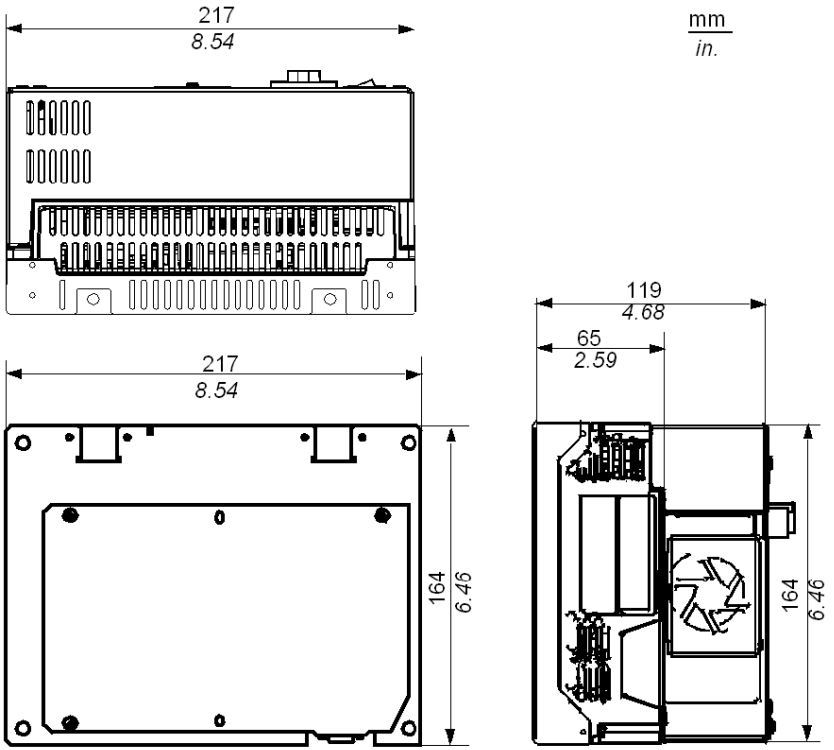

Installation Fastener Dimensions

The products are designed to be mounted in a cabinet with the attachments described below:

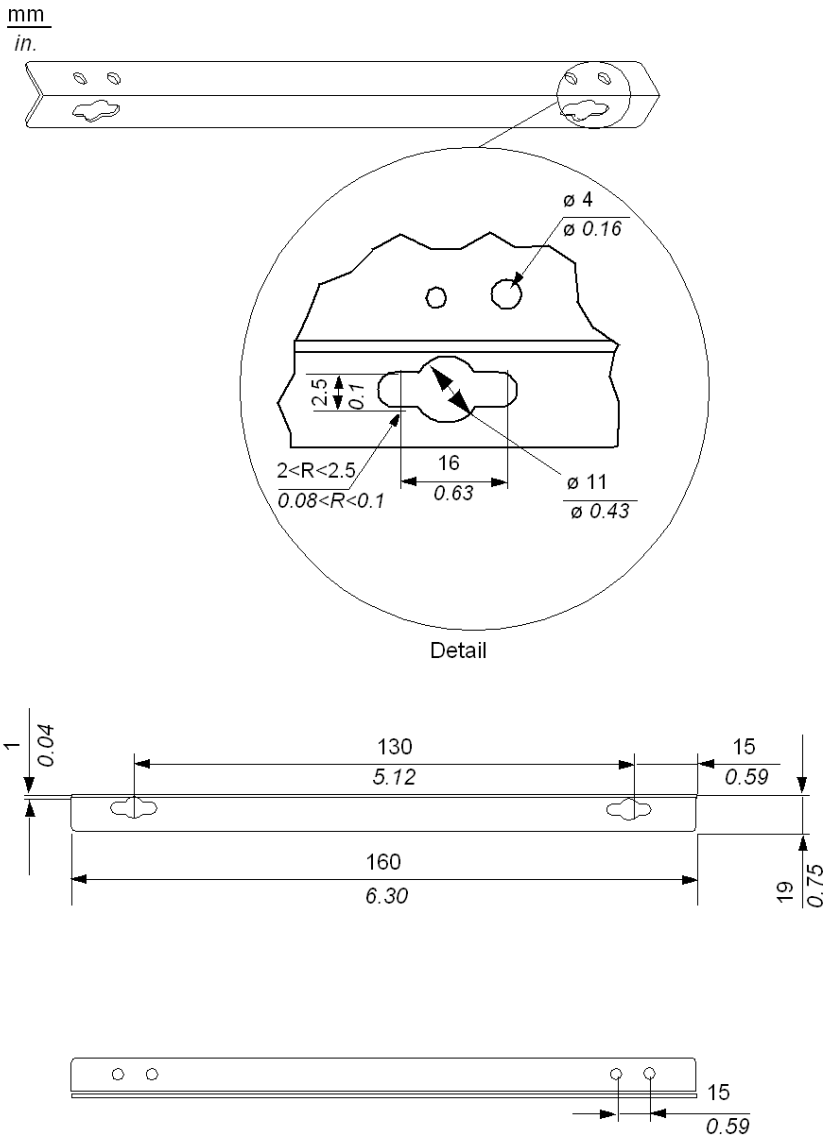

Dimensions with Installation Fasteners installed

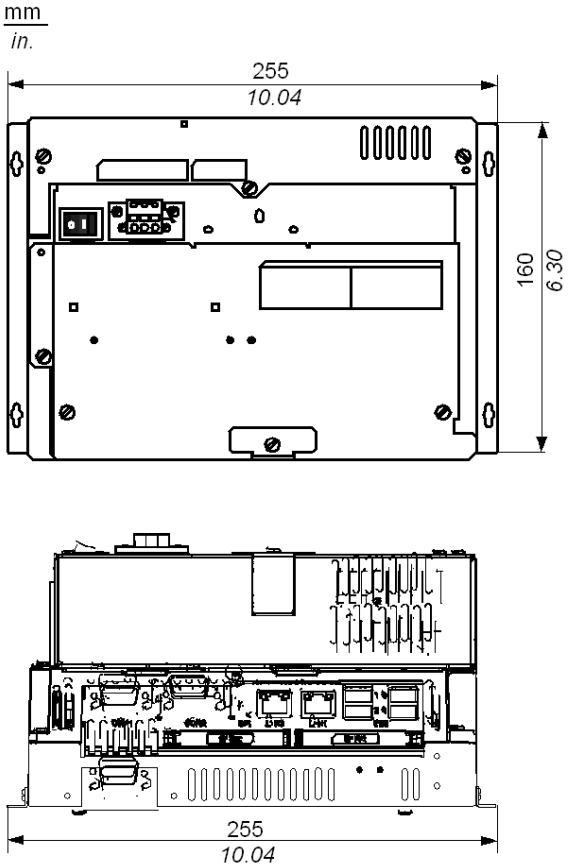

Dimensions of the Screws Holes

Use the following dimension drawing to drill the attachment bracket attachment screw holes in the installation. Use M4 size screws.

Horizontal or Wall mounting:

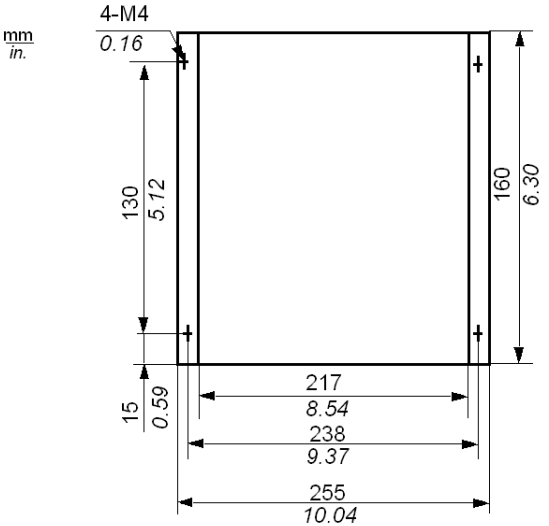

Preparing to install the Compact PC BOX

Temperature considerations

Overheating can damage your Compact PC BOX and result in unexpected behavior. Therefore, it is important to examine your installation location, panels, and associated equipment to determine whether the local temperature will exceed the operating limits.

The maximum acceptable ambient temperature for operation of the Compact PC BOX is 50 °C (122 °F). During installation and commissioning, you should test that your Compact PC BOX is not subjected to higher temperatures.

When conducting these tests, keep in mind that the temperature is a function of the following parameters:

- Ambient temperature of the room where the installation is located.
- Thermal characteristics of the cabinet.
- Ventilation or air conditioning (if any) of the cabinet.
- Power dissipated by all the equipment located within the cabinet.
- Condition of the Compact PC BOX dust protection filters.

NOTE: When conducting temperature tests, ensure all devices in the vicinity are powered and under maximum load. Once this state is achieved, allow a minimum of 1 hour to elapse before taking your temperature measurements. Allow more time if the environment has significant thermal mass.

NOTE: Measure the temperature at a distance of 50 mm (2 in.) from each face of the Compact PC BOX.

⚠ WARNING

UNINTENDED EQUIPMENT OPERATION

Overheating can cause incorrect device behavior and device damage:

- Place devices dissipating the most heat at the top of the cabinet and ensure adequate ventilation.
- Avoid placing the Compact PC BOX next to devices that might cause overheating.
- Install the Compact PC BOX in a location providing a minimum clearance of 50 mm (2 in.) or more from all adjacent structures and equipment.
- Install the Compact PC BOX in a horizontal panel or attach it to a vertical wall according to the figures on the following page.
- Keep the Compact PC BOX away from arc-generating devices such as magnetic switches and non-fused breakers.
- Avoid using the Compact PC BOX in environments where corrosive gases are present.

Failure to follow these instructions can result in death, serious injury, or equipment damage.

The Reliability, Availability, and Serviceability (RAS) features of your Compact PC BOX can detect high temperatures and raise alarms when these temperatures exceed defined limits. When the RAS provides such an alarm, you will need to use the System Monitoring software to learn which temperatures have been exceeded. For more details, see *System Monitoring, page 83*.

These figures show the recommended installation positions:

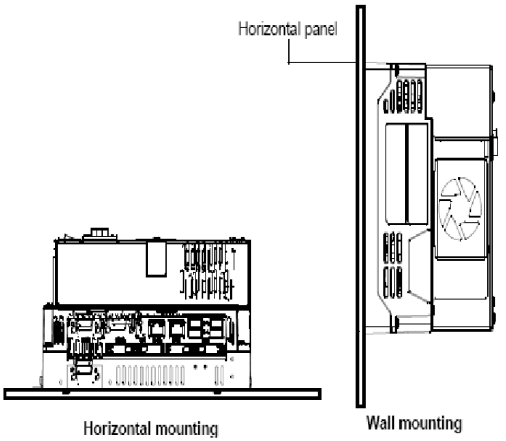

Clearance for horizontal mounting:

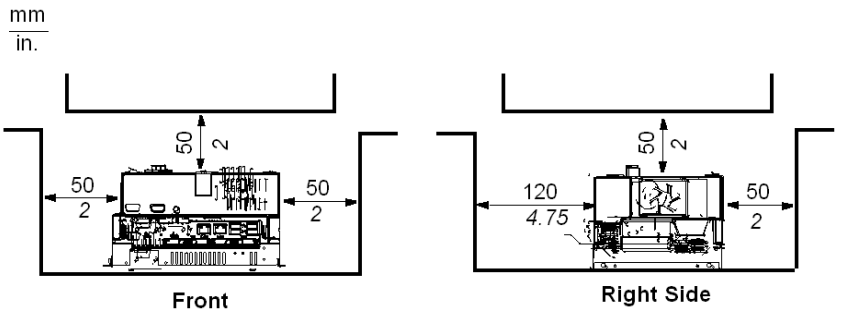

Clearance for vertical (wall) mounting:

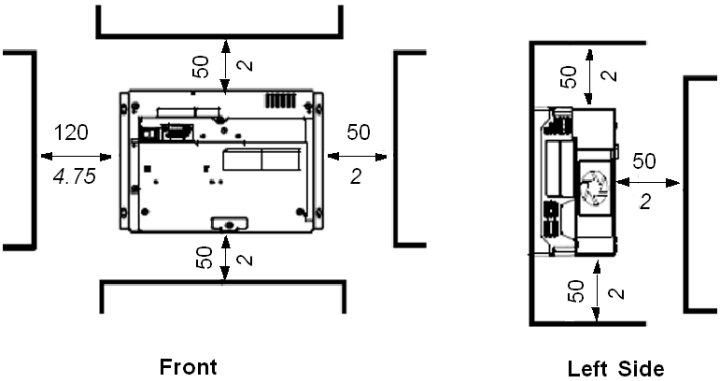

NOTE: A minimum distance of 50 mm (2 in.) is recommended for ventilation, but this does not necessarily provide adequate clearance for cable routing and cable connector dimensions. Allow 120 mm (4.75 in.) for cable routing at the front face of your Compact PC BOX, and 50 mm (2 in.) or greater on the other device faces.

Shocks and Vibration Considerations

The Compact PC BOX contains elements sensitive to shocks and vibrations (conventional hard disk drives, PCMCIA cards, external cables etc.) While this product has been designed to tolerate the shock and vibration conditions in most industrial environments, adherence to the following principles is recommended:

- Securely attach your Compact PC BOX to a rigid cabinet or wall not subject to excessive mechanical disturbances.
- Ensure the thickness of the installation panel is from 1.6 to 10 mm (0.06 to 0.39 in.) The M4 screws specified for installation require a material depth of at least 1.6 mm (0.06 in.)
- Use metal reinforcing strips to strengthen panel and cabinet surfaces if required.
  - Due consideration should be given to the product's weight, especially if high levels of vibration are expected and the product's installation surface can move.
  - Panel cut-outs and cabinet hinging and latching mechanisms are inherently non-rigid. Always reinforce such areas.
- Verify that all installation tolerances and torque values specified in this manual are maintained.
- Test your panel or cabinet to verify it is sufficiently rigid to maintain the Compact PC BOX's environmental operating limits.

NOTE: The Compact PC BOX is designed for use in a NEMA Type 4X or 12 enclosure.

Installing or Moving

Extra care should be taken with respect to the specification concerning vibration levels when installing or moving the Compact PC BOX (see *Preparing to install the Compact PC BOX, page 42*). If the MPCKN02-series Compact PC BOX is moved, for example, while it is installed in a rack equipped with caster wheels, the unit can receive excessive shock and vibration.

⚠ CAUTION

EXCESSIVE VIBRATION

- Plan your installation activities so that device shock and vibration tolerances are not exceeded.
- Ensure that the panel opening and thickness are within the specified tolerances.
- The recommended torque for mounting the Compact PC BOX is 0.5 N•m (4.5 lb-in).

Failure to follow these instructions can result in injury or equipment damage.

Installation Fasteners

⚠ CAUTION

OVERTORQUE AND LOOSE HARDWARE

- Do not exert more than 0.6 N•m (5.3 lb-in) of torque when tightening the installation fastener, enclosure, accessory, or terminal block screws. Tightening the screws with excessive force can damage the plastic casing of the Compact PC BOX.
- When installing or removing screws, ensure that they do not fall inside the Compact PC BOX's chassis.

Failure to follow these instructions can result in injury or equipment damage.

NOTE: The screw installation fasteners are required for NEMA Type 4 protection.

Water and Dust Considerations

The Compact PC BOX conforms to IP20, which means that the device itself does not have any resistance to dust or water (liquid, vapor, or condensate). Therefore, you must ensure that your installation location is free of dust and water, or you must use a cabinet or other means to protect your device from these substances.When using an enclosure to provide dust and water resistance, remember to inspect the condition of the enclosure's joints, cable grommets, and other openings on a regular basis.

NOTE: The condition of the Compact PC BOX's dust filter is also important to protecting your Compact PC BOX from dust (see *Removing and Cleaning the Fan Filter, page 102*).

Installing the Compact PC BOX

Step	Action
1	Attach the installation fasteners with the four screws. Use a torque of 0.5 to 0.6 N•m (4.5 to 5.3 lb-in): 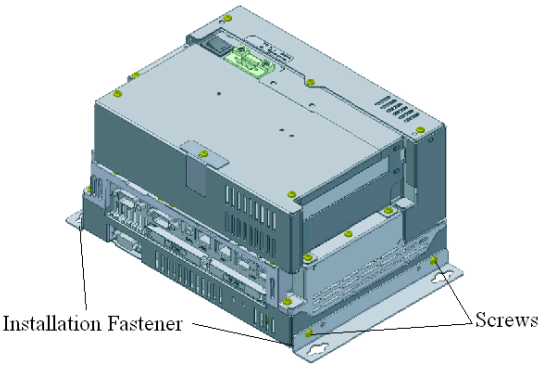
2	Tighten the screws temporarily on the board: 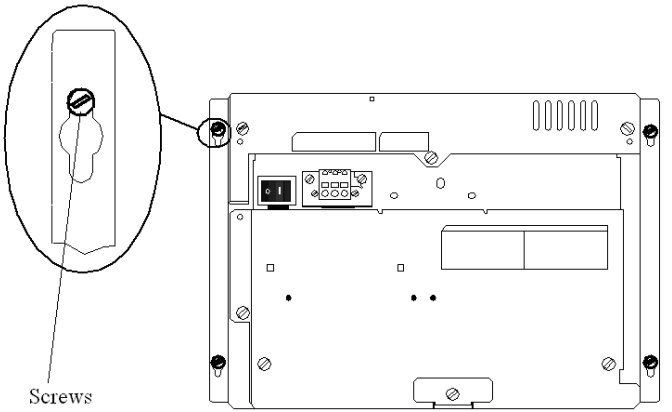
3	Mount installation fasteners temporarily onto the screw.
4	Tighten the screws until the Compact PC BOX is securely fixed. Use a torque of 0.5 to 0.6 N•m (4.5 to 5.3 lb-in).

Implementation

II

Subject of this Part

This part describes the implementation of the product.

What's in this Part?

This part contains the following chapters:

Chapter	Chapter Name	Page
5	Getting Started	51
6	Main Power Connection	53
7	Configuration of the BIOS	59
8	Hardware Modifications	65

Getting Started

5

First power-up

License Agreement

NOTE: Limitations on your usage of the Windows® XP Pro Operating System are noted in Microsoft's End User License Agreement (EULA). This EULA is included on the CD-ROM. Please read this document before first power-up.

Preparation

Depending on the software configuration of the Compact PC BOX, you may need to perform the following operations on first power-up:

- Customize and set the parameters for your system. Refer to the Magelis Installation Guide, reference 35012221.
- Install, customize and set the parameters for the Schneider Electric applications (Unity Pro, PL7 Junior or PL7 Pro, Vijeo Designer, Vijeo Designer Lite, OFS, MMI 17, XBT-L1000, PL7-07)

Some Useful Tools

Some useful shortcuts are shown in the launch bar.

NOTE: You will need to attach a monitor to your Compact PC BOX in order to observe these shortcuts.

Icon	Usage
	This is the virtual keyboard. Click on it, and a graphical keyboard is displayed. It is useful when you do not want to connect, or can not connect a keyboard to the unit.
	Not functional in this product version.
	Not functional in this product version.

Main Power Connection

6

Subject of this Chapter

This chapter describes the connection of the MPCKN02-series Compact PC BOX to the main power supply.

What's in this Chapter?

This chapter contains the following topics:

Topic	Page
Grounding	54
Connecting the AC Power Cord	57

Grounding

Overview

The grounding resistance between the Compact PC BOX's Frame Ground (FG) and Ground must be 100 Ω or less. When using a long grounding wire, check the resistance and if required replace a thin wire with a thicker wire and place it in a duct. In addition, please refer to the table below for maximum line lengths for the thickness of wire.

Ground Wire Dimensions

Wire Thickness	Maximum Line Length
2 mm^2 (14 AWG)	30 m (98 ft.)
	60 m (196 ft.) round trip.
1.5 mm^2 (16 AWG)	20 m (65 ft.)
	40 m (131 ft.) round trip.

⚠ WARNING

UNINTENDED EQUIPMENT OPERATION

- Use only the authorized grounding configurations shown below.
- Confirm that the grounding resistance is 100 Ω or less.
- Test the quality of your ground connection before applying power to the device. Excess electromagnetic interference on the ground line can disrupt the Compact PC BOX's operations.

Failure to follow these instructions can result in death, serious injury, or equipment damage.

Dedicated Ground

Connect the Frame Ground (FG) to a dedicated ground.

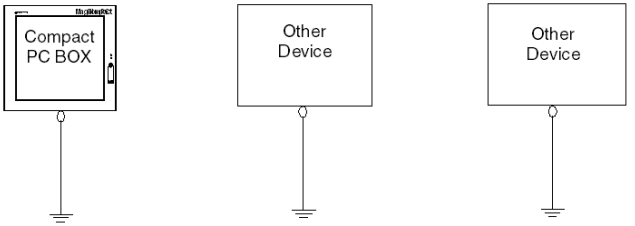

Shared Ground Allowed

If a dedicated ground is not possible, use a shared ground, as shown below.

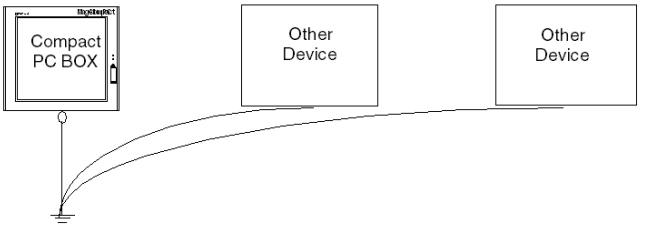

Shared Ground not Allowed

Do not connect the Compact PC BOX to ground through other devices using the SG terminal.

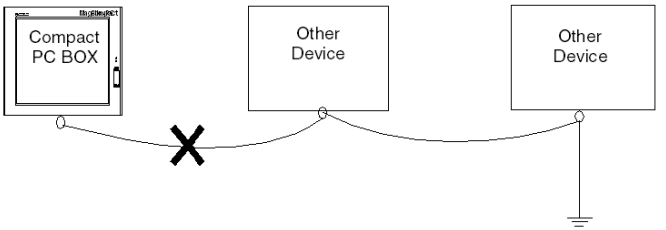

Shared Ground - Avoid Ground Loop

When connecting an external device to a Compact PC BOX with the Shield Ground (SG), ensure that no ground loop is created. The Compact PC BOX's FG and SG are connected internally.

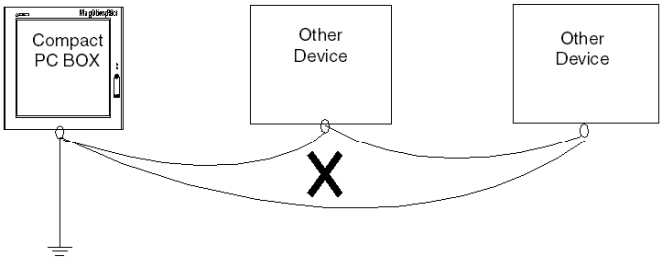

Grounding Procedure

When grounding, follow the procedures given below:

Step	Action
1	Check that the grounding resistance is 100 Ω or less.
2	When connecting the SG line to another device, ensure that the design of the system/connection does not produce a ground loop. **Note:** The SG and FG terminals are connected internally in the unit.
3	Wherever possible, use 2 mm^2 (14 AWG) wire to make the ground connection. If this isn't possible, ensure that the grounding wire gauge and length conform to the table in *Ground Wire Dimensions, page 54*. Create the connection point as close to the unit as possible and make the wire as short as possible.

Grounding I/O Signal Lines

⚠ WARNING

UNINTENDED EQUIPMENT OPERATION

- Do not wire I/O lines in proximity to power cables, radio devices, or other equipment that may cause electromagnetic interference.
- If wiring of I/O lines near power lines or radio equipment is unavoidable, use shielded cables and ground one end of the shield to the Compact PC BOX's Frame Ground (FG).

Electromagnetic radiation may interfere with the Compact PC BOX's control communications.

Failure to follow these instructions can result in death, serious injury, or equipment damage.

Connecting the AC Power Cord

Before connecting the Compact PC BOX's power cable to the power connector on the unit, verify that the power cord is disconnected from the main power supply.

⚠ DANGER

HAZARD OF ELECTRIC SHOCK, EXPLOSION OR ARC FLASH

- Remove all power from the device before removing any covers or elements of the system, and prior to installing or removing any accessories, hardware, or cables.
- Unplug the power cable from both the Compact PC BOX and the AC power supply.
- Always use a properly rated voltage sensing device to confirm power is off.
- Replace and secure all covers or elements of the system before applying power to the unit.
- Use only the specified voltage when operating your MPCKN02-series Compact PC BOX. This unit is designed to use 100...240 Vac.

Failure to follow these instructions will result in death or serious injury.

⚠ WARNING

EQUIPMENT DISCONNECTION OR UNINTENDED EQUIPMENT OPERATION

- Ensure that power, communication, and accessory connections do not place excessive stress on the ports. Consider the vibration environment when making this determination.
- Securely attach power, communication, and external accessory cables to the panel or cabinet.
- Use only commercially available USB cables.

Failure to follow these instructions can result in death, serious injury, or equipment damage.

Power Cord Connection (AC Compact Version)

The table below describes how to connect the power cord to the Compact PC BOX:

Step	Action
1	Remove all power from the Compact PC BOX and confirm that all power supplies have been disconnected from their power sources.
2	Connect the power cord (see *Package Contents, page 24*) to the terminal block as shown below (connection is already done with provided cables): 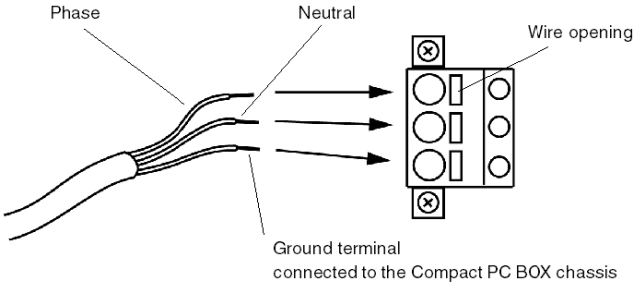
3	Place and screw the terminal block to 0.5 to 0.6 N·m (4.45 to 5.3 lb-in), (see *Package Contents, page 24*) on the Compact PC BOX's power connector: 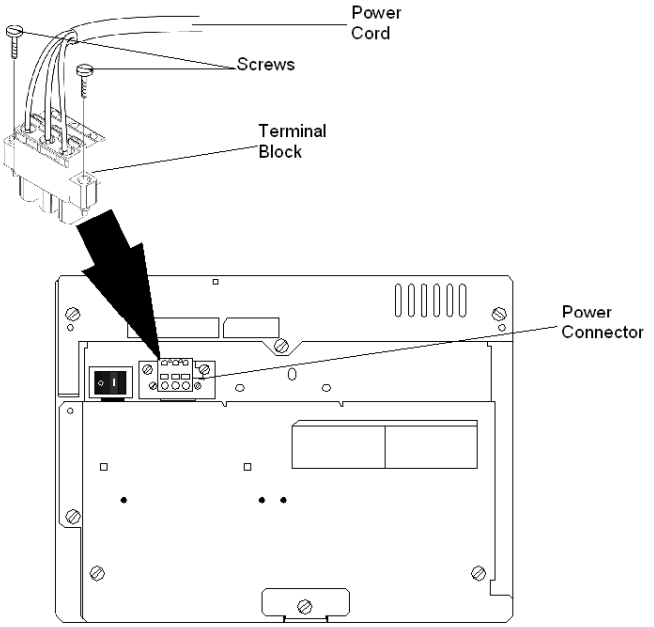

Configuration of the BIOS

7

Accessing the BIOS

Overview

NOTE: Normally, factory (default) settings should be used.

Connect a USB or PS/2 keyboard to the Compact PC BOX.

Connect a monitor to the Compact PC BOX.

Apply power to the Compact PC BOX using the power switch and when prompted to do so, press the F2 key to enter the BIOS.

Main Menu

Selecting the `Main` menu item displays the following screen:

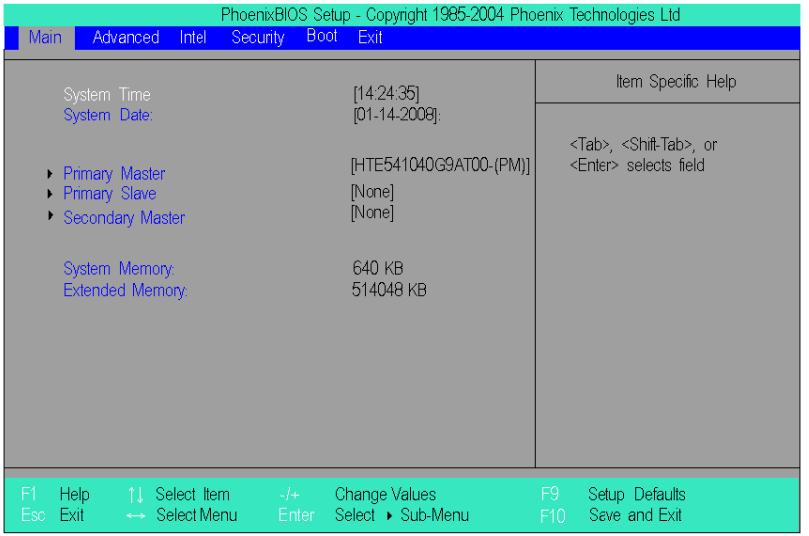

NOTE: When finished entering parameters, press the Esc to reach the `Exit` menu. Here you will be prompted either to exit saving the changes, or to exit without saving the changes as described below.

System Time

Time (hh:mm:ss)

This field shows the present Compact PC BOX's time from the internal clock.The hh/mm/ss (00:00:00) format is factory set prior to shipping.

Hours: 00 to 23

Minutes: 00 to 59

Seconds: 00 to 59

The correct time can be set by using the [+] and [-] keys.

System Date

Date (yy:mm:dd)

This field shows the Compact PC BOX's internal calendar. The correct date can be set by using the [+] and [-] keys.

Year: 1999 to 2099

Month: Jan/Feb/Mar/Apr/May/Jun/Jul/Aug/Sep/Oct/Nov/Dec

Day: 1 to 31

Primary Master

Displays the name of the devices connected to the primary bus of the Compact PC BOX. Pressing the Enter key will call up the `Parameter Settings` menu.

Primary Slave

Displays the name of the devices connected to the secondary bus of the Compact PC BOX. Pressing the Enter key will call up the `Parameter Settings` menu.

System Memory

Displays the capacity of the System Memory.

Extended Memory

Displays the capacity of the Extended Memory.

Password Security

From the `Main` menu use the Tab key to reach the `Security` menu. This menu is used for setting Supervisor and User Passwords.

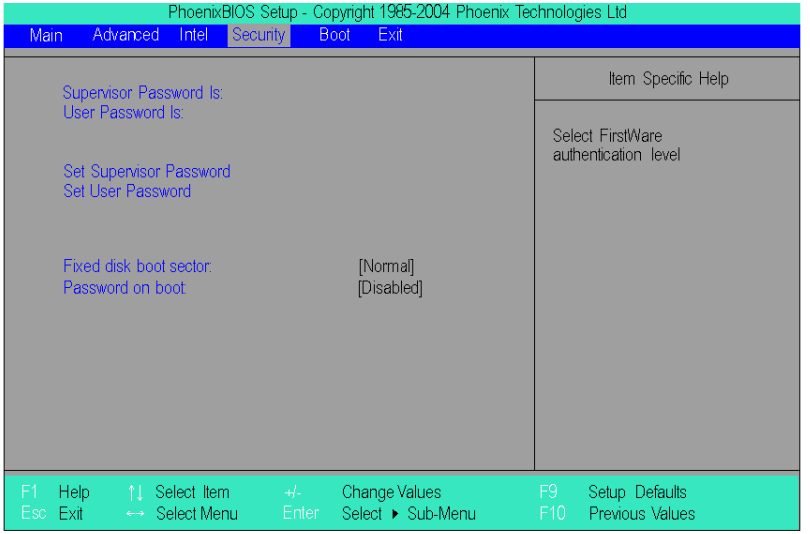

Supervisor Password

This password is used to change system information settings. It is designed to prevent unapproved users from changing these settings. Entering up to 8 characters here will overwrite the current password.

When you wish to have no password, click on the Enter key. Next, the words "PASSWORD DISABLE" will be displayed, providing confirmation that the Password is no longer set.

User Password

This password is used to view system information settings. It is designed to prevent unapproved users from viewing the system information settings. Entering up to 8 characters here will overwrite the current password.

When you wish to have no password, click on the Enter key. Next, the words "PASSWORD DISABLE" will be displayed, providing confirmation that the Password is no longer set.

NOTE:

- Without having defined a Supervisor Password, it is not possible to define a User Password.
- When using `Set Supervisor Password`, you can easily view and change the system settings.
- When using only `Set User Password`, you will be allowed to view the system data only, not change it.

Exit BIOS saving the Modifications

This feature saves the settings entered in the `Setup Utility` and restarts the Compact PC BOX.

Exit BIOS Without Saving Modifications

This feature quits the `Setup Utility` program without saving any settings entered.

Hardware Modifications

8

Subject of this Chapter

This chapter concerns the hardware modifications for the MPCKN02-series Compact PC BOX.

A wide variety of optional units, Main Memory, CF cards, PCMCIA (PC cards) manufactured by Schneider Electric and commercial expansion boards (PCI bus compatible), can be used with this product.

What's in this Chapter?

This chapter contains the following topics:

Topic	Page
Before Modifications	66
Removing the Compact PC BOX's Cover	68
Compact PC BOX Internal View	69
Installing a Larger RAM Chip	70
Expansion Board (PCI) Installation	72
Compact Flash (CF) Card Installation and Removal	74
USB Holder Attachment/Removal	76

Before Modifications

Overview

For the detailed installation procedures for the optional units, refer to the OEM (Original Equipment Manufacturer) Installation Guide for that specific unit.

⚠ DANGER

HAZARD OF ELECTRIC SHOCK, EXPLOSION OR ARC FLASH

- Remove all power from the device before removing any covers or elements of the system, and prior to installing or removing any accessories, hardware, or cables.
- Unplug the power cable from both the Compact PC BOX and the power supply.
- Always use a properly rated voltage sensing device to confirm power is off.
- Replace and secure all covers or elements of the system before applying power to the unit.
- Use only the specified voltage when operating your MPCKN02-series Compact PC BOX. This unit is designed to use 100...240 Vac.

Failure to follow these instructions will result in death or serious injury.

⚠ CAUTION

OVERTORQUE AND LOOSE HARDWARE

- Do not exert more than 0.6 N•m (5.3 lb-in) of torque when tightening the installation fastener, enclosure, accessory, or terminal block screws. Tightening the screws with excessive force can damage the plastic casing of the Compact PC BOX.
- When installing or removing screws, ensure that they do not fall inside the Compact PC BOX's chassis.

Failure to follow these instructions can result in injury or equipment damage.

⚠ CAUTION

STATIC SENSITIVE COMPONENTS

Compact PC BOX internal components, including accessories such as RAM modules and expansion boards, can be damaged by static electricity. Observe the electrostatic precautions below when handling such components.

Failure to follow these instructions can result in injury or equipment damage.

Precautions to be taken:

- Keep static-producing materials (plastic, upholstery, carpeting) out of the immediate work area.
- Do not remove ESD-sensitive components from their anti-static bags until you are ready to install them.
- When handling static-sensitive components, wear a properly grounded wrist strap (or equivalent).
- Avoid unnecessary contact with exposed conductors and component leads with skin or clothing.

Removing the Compact PC BOX's Cover

How to Remove the Compact PC BOX's Cover

Step	Action
1	Shut down Windows® in an orderly fashion and remove all power from the device.
2	Place the unit on a clean, level surface with the front face facing downwards. Place a soft, non-abrasive pad on the surface before placing the unit upon it.
3	Loosen the screws (1) attaching the cover (2) as shown below: 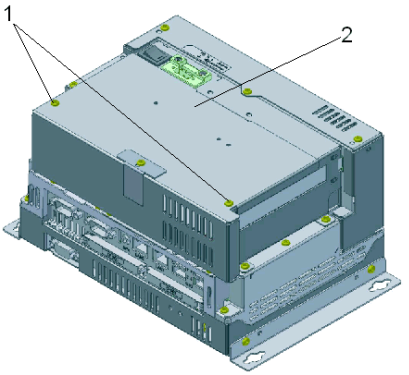

Compact PC BOX Internal View

Illustration

The following shows the Compact PC BOX's internal view:

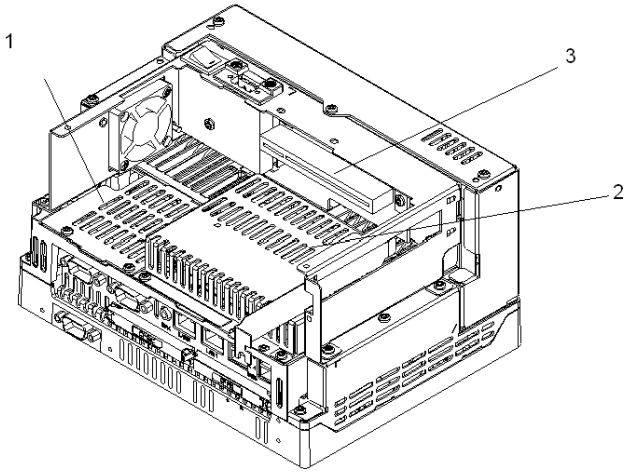

The following table gives the internal description of the Compact PC BOX:

Number	Description
1	Main Memory Area
2	HDD
3	PCI Connectors

Installing a Larger RAM Chip

General

NOTE: If you install a 1 GB RAM chip, a blue screen will appear for about 4 minutes after you start the terminal. After this installation, the terminal will start as usual.

⚠ DANGER

HAZARD OF ELECTRIC SHOCK, EXPLOSION OR ARC FLASH

Read and understand the safety information in *Before Modifications, page 66* and *Removing the Compact PC BOX's Cover, page 68* before attempting this procedure.

Failure to follow these instructions will result in death or serious injury.

Installing a RAM Chip

When installing a memory (RAM) module, follow the procedures listed below:

Step	Action
1	Shut down Windows®, in an orderly fashion and remove all power from the device.
2	Remove the terminal from the Installation Fasteners and place the unit on a clean, level surface with the front panel facing downwards.
3	Remove the Compact PC BOX's cover (See *Removing the Compact PC BOX's Cover, page 68*): 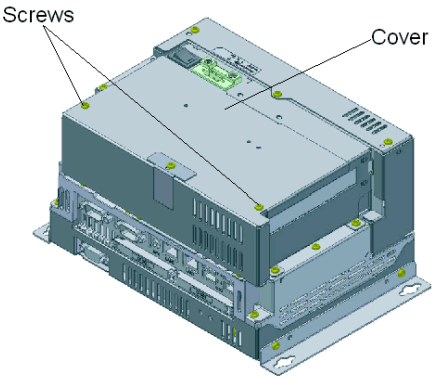

Step	Action
4	Remove the 2 screws on the RAM Cover and remove the cover: 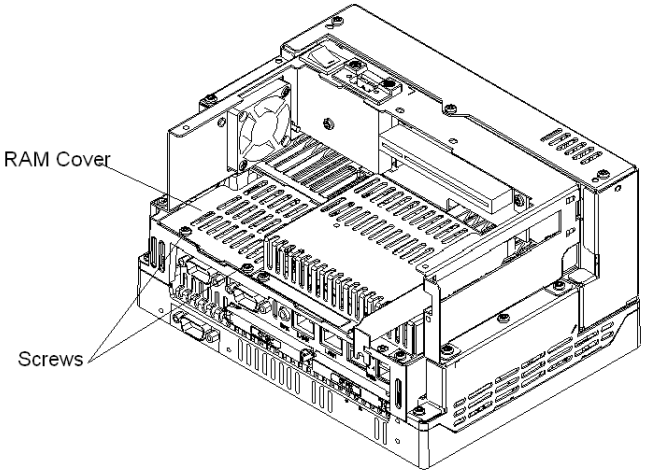
5	Carefully remove the old RAM module from the holder and store it in its anti-static bag.
6	Angle the main memory module down slightly, and push it in until the connector pins mate with the module pins. Then, lower the module until it is horizontal and insert it completely into the connector. 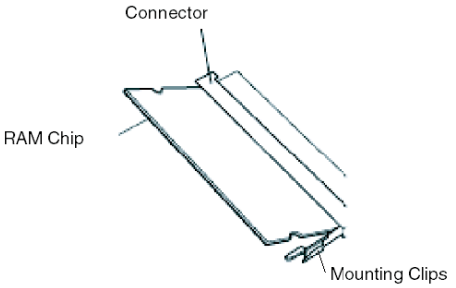
7	Push in the main memory module until the mounting clips snap into place.
8	Replace the RAM cover and the Compact PC BOX's cover and reinstall the unit.

Expansion Board (PCI) Installation

⚠ DANGER

HAZARD OF ELECTRIC SHOCK, EXPLOSION OR ARC FLASH

Read and understand the safety information in *Before Modifications, page 66* before attempting this procedure.

Failure to follow these instructions will result in death or serious injury.

Installing the Expansion Board

The table below describes how to install a commercial PCI board.

Step	Action
1	Shut down Windows® in an orderly fashion and remove all power from the device.
2	Place the unit on a flat level surface with the front face downwards.
3	Remove the Compact PC BOX's rear cover (see *Removing the Compact PC BOX's Cover, page 68*).
4	Remove the Expansion Board Support Cover's screw and detach the blank panel. 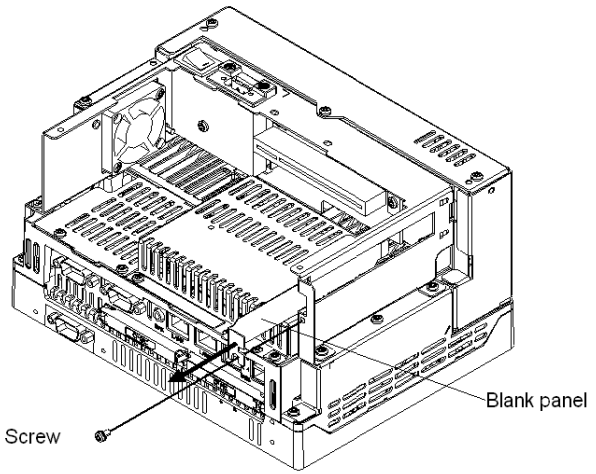

Step	Action
5	Insert the expansion board into the PCI board connector, and secure it in place using the support cover's screw. The necessary torque is 0.5 to 0.6 N·m (4.5 to 5.3 lb-in). 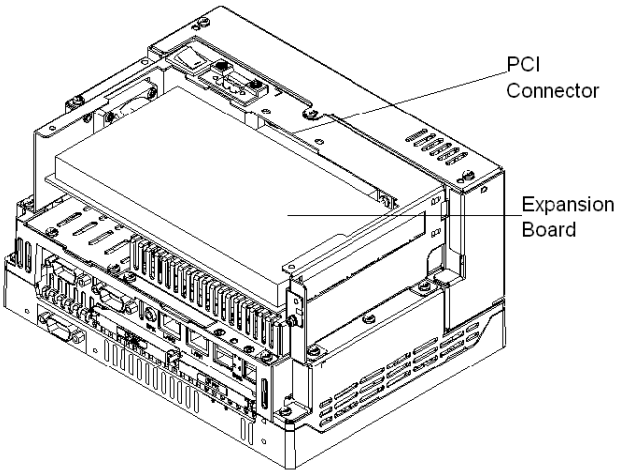
6	Replace the expansion board cover and the expansion board support.
7	Replace the rear cover and secure it in place using the two (2) attachment screws. **Note:** The maximum size allowed for an expansion board is 174.63 x 106.68 mm (6.88 x 4.2 in). When using an expansion board of this size, be sure to secure it in place using the expansion board support cover. Before the rear cover is closed, remove the expansion board support cover screw and be sure the expansion board support cover is detached. Next, replace the rear cover, and then secure the expansion board support cover to the rear cover using the expansion board locker system. The necessary torque is 0.5 to 0.6 N·m (4.5 to 5.3 lb-in).

Compact Flash (CF) Card Installation and Removal

Preparing to Use a CF Card

The Compact PC BOX's operating system views the CF card as a hard disk. Proper handling and care of the CF card helps extend the life of the card. Familiarize yourself with the card prior to attempting insertion or removal of the card.

⚠ DANGER

HAZARD OF ELECTRIC SHOCK, EXPLOSION OR ARC FLASH

Read and understand the safety information in *Before Modifications, page 66* before attempting this procedure.

Failure to follow these instructions will result in death or serious injury.

CAUTION

COMPACT FLASH (CF) CARD DAMAGE AND DATA LOSS

- Remove all power before making any physical contact with an installed CF card.
- Use only CF cards manufactured by Schneider Electric. The performance of the Compact PC BOX has not been tested using CF cards from other manufacturers.
- Confirm that the CF card is correctly oriented before insertion.
- Do not bend, drop, or strike the CF card.
- Do not touch the CF card connectors.
- Do not disassemble or modify the CF card.
- Keep the CF card dry.

Failure to follow these instructions can result in equipment damage.

Inserting the CF Card

The table below describes how to insert the CF card.

Step	Action
1	Shut down Windows® in an orderly fashion and remove all power from the device.
2	Open the CF card cover by pushing the side tab and moving it 90° . Insert the CF card (Primary or Secondary) firmly into the CF card slot, and check that the eject button pops out: 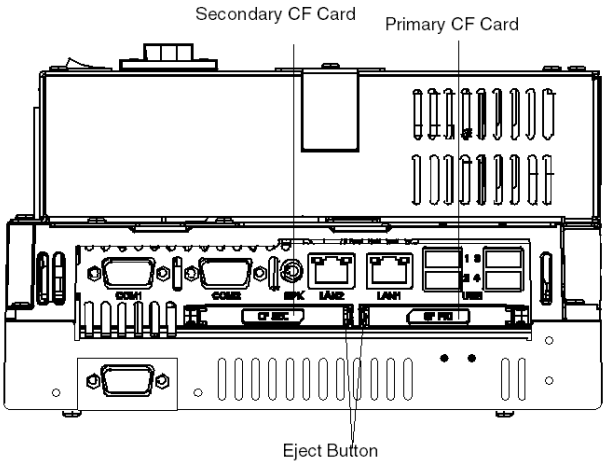
3	Close the CF card cover and make sure it is secured in place

Removing the CF Card

The table below describes how to remove the CF card.

Step	Action
1	Shut down Windows® in an orderly fashion and remove all power from the device.
2	Open the CF card cover as described above.
3	Press the eject button in fully to remove the CF card from the CF card slot
4	After removing the CF card, close the CF card cover and make sure it is secured in place

Data Writing Limitation

The CF card is limited to approximately 100,000 write operations. Therefore, be sure to back up all CF card data regularly to another storage media.

USB Holder Attachment/Removal

Introduction

When using a USB device, attaching the USB holder to the USB interface located on the side of the Compact PC BOX minimizes the chances that the USB cable interface will be disconnected.

⚠ DANGER

HAZARD OF ELECTRIC SHOCK, EXPLOSION OR ARC FLASH

Read and understand the safety information in *Before Modifications, page 66* before attempting this procedure.

Failure to follow these instructions will result in death or serious injury.

⚠ WARNING

EQUIPMENT DISCONNECTION OR UNINTENDED EQUIPMENT OPERATION

- Ensure that power, communication, and accessory connections do not place excessive stress on the ports. Consider the vibration environment when making this determination.
- Securely attach power, communication, and external accessory cables to the panel or cabinet.
- Use only commercially available USB cables.

Failure to follow these instructions can result in death, serious injury, or equipment damage.

USB Holder Attachment

The table below describes how to attach the USB holder.

Step	Action
1	Shut down Windows® in an orderly fashion and remove all power from the device. Then place the unit face-down on a flat surface to see the 4 USB connectors: ● When using two or more USB ports, be sure to first connect one USB cable to the lower USB connector, and then connect the second USB cable to the upper USB connector. ● When using only one of the USB ports, be sure to use the upper USB connector. This allows you to securely clamp the USB cable in the cable clamp. 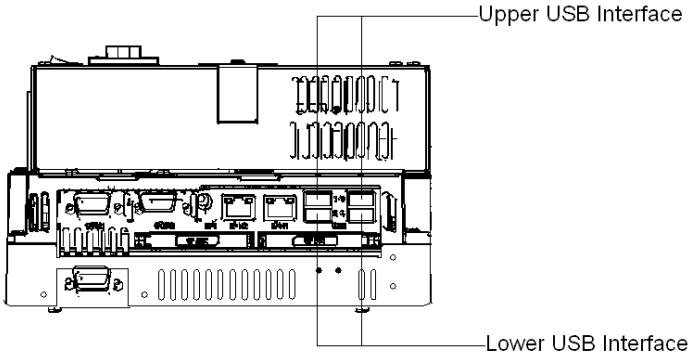
2	Unscrew the two attachment screws from the Compact PC BOX's cover.
3	Re-attach the USB holder with the 2 screws removed as part of step 2 above. Use a torque of 0.5 - 0.6 N·m (4.5 - 5.3 lb-in).
4	Insert the USB Cable Clamp's band through the hollow of the holder. Pass the USB cables through the Cable Clamp's band and securely tighten the clamp band around the cables. ● Be sure the clamp is securely holding the USB cable's plug and collar. ● Be sure the clamp is positioned as shown below, with the clamp pointing upwards not to the side. This is to keep the clamp from interfering with nearby connectors and their cables. 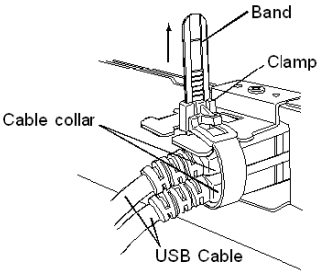

USB Holder Removal

The table below describes how to remove the USB holder.

Step	Action
1	To remove the clamp from the USB cables, push down on the clamp strap's clip to release it while pulling up on the clamp: 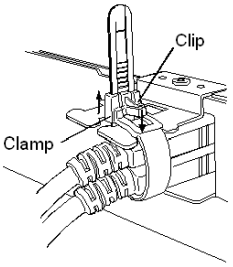

Installation

III

Subject of this Part

This part describes the product installation.

What's in this Part?

This part contains the following chapters:

Chapter	Chapter Name	Page
9	Connections to PLCs	81
10	System Monitoring	83
11	Maintenance	99
12	Troubleshooting	105

Connections to PLCs

9

Connection to PLCs

Overview

Different connection cables are required depending on the type of PLC being used. These cables are specified below.

Nano, Micro, Premium

The Nano, Micro, and Premium PLCs require the use of the TSX PCX 1031 connection cable. This cable is supplied with Unity Pro, PL7 Pro and PL7 Junior software.

The rotatory switch on this cable must be set to "TER MULTI" for a connection with the COM1 serial port or the connection will not succeed. It can be left on "TER DIRECT" for a connection with the COM2 serial port.

This 2 m (6.6 ft) cable is equipped with the following:

- A 9 pin D-SUB type female connector for connection to the Compact PC BOX.
- A 5 pin microDin type male connector for connection to the PLC.

Series 7

The Series 7 family includes the TSX 27 PLCs, and the TSX/PMX 47/67/87/107 PLCs.

Series 7 PLCs use an FT20CBCL30 connection cable supplied with the XTEL Pack software.

This 2.5 m (8.2 ft) cable is equipped with the following:

- A 9 pin D-SUB type female connector for connection to the Compact PC BOX.
- A 9 pin D-SUB type male connector for connection to the PLC.

TSX 17

TSX 17 PLCs are connected via an accessory for converting the Compact PC BOX's COM1 link (RS 232) into an RS 485 link (to be ordered separately).

Accessory reference number: TSX 17 ACC PC

APRIL 2000/3000

These PLCs require the use of connection cable TSX PKIT 2040 (to be ordered separately).

This 2 m (6.6 ft) cable is equipped with the following:

- A 9 pin D-SUB type female connector for connection to the Compact PC BOX.
- A 9 pin D-SUB type male connector for connection to the PLC.

System Monitoring

10

Subject of this Chapter

This chapter describes the System Monitoring and RAS (Reliability, Availability and Serviceability) features of the MPCKN02-series Compact PC BOX.

What's in this Chapter?

This chapter contains the following topics:

Topic	Page
System Monitor Overview	84
System Monitor Property	88
System Monitor Interface	93

System Monitor Overview

Presentation

The System Monitor software enables you to monitor several system parameters (CPU temperature, fans speed, normal operation of the miscellaneous voltages, normal operation of the hard disk...).

The System Monitor software alerts you if thresholds are exceeded via a popup message or a Windows alarm (in the Event Viewer). You can also configure actions to be undertaken if an alarm occurs: shutdown the Compact PC BOX, restart the Compact PC BOX, etc.

The software enables both system configuration (see *System Monitor Property, page 88*), and system operation (see *System Monitor Interface, page 93*).

System Monitor Architecture

The following figure shows the architecture of System Monitor:

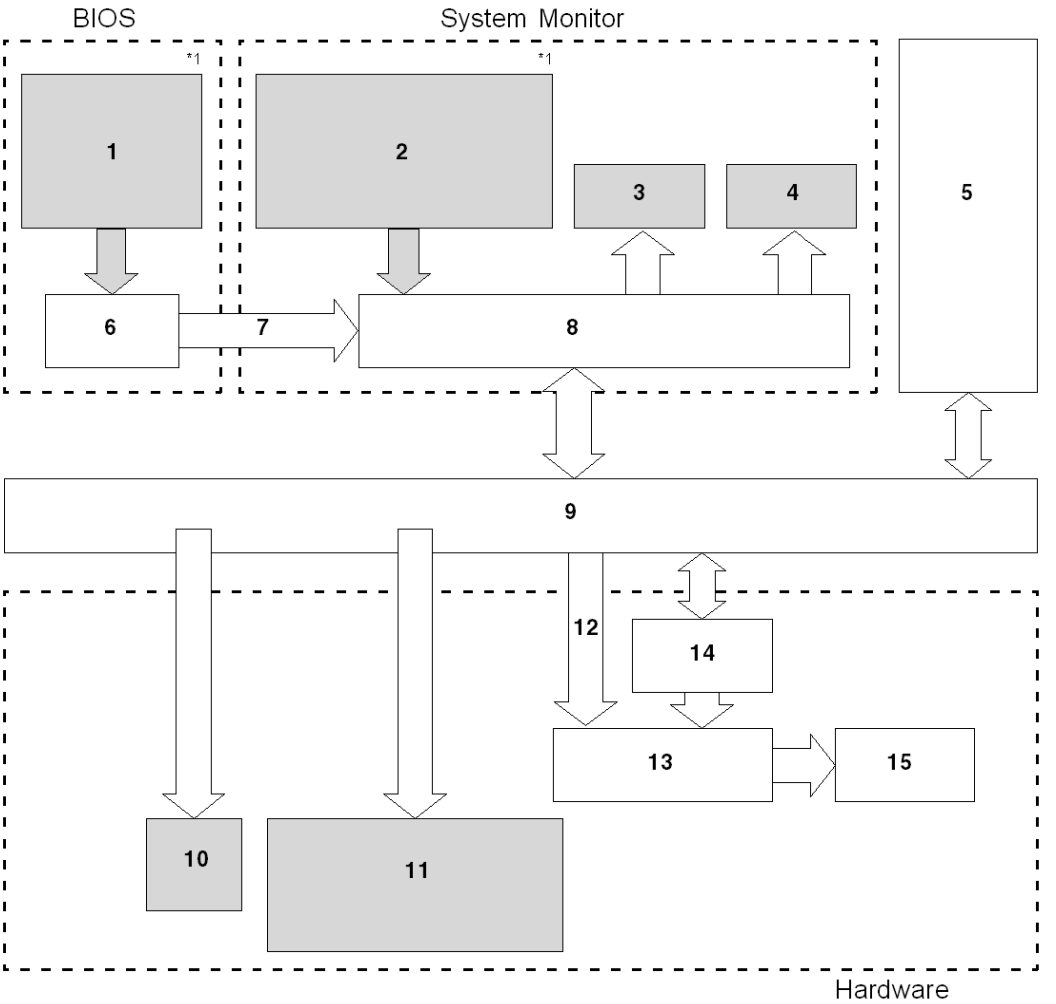

1 BIOS Setup: Voltage, Fan RPM3, Temperature alarm, Detection Level Setting, Enable/Disable Setting

2 System Properties: SMART Alarm, Power alarm, Fan Alarm, Temperature Alarm, Output Settings, Watchdog Timer Value Settings, Watchdog Reset Enable/Disable Settings

3 Popup Message

4 OS Shutdown

5 User Application

6 BIOS
7 System Alarm Data
8 System Monitor Application
9 Driver or API-DLL
10 Buzzer
11 LED -- Green (Lit): Power On, Green (Blinking): Soft OFF Status, Orange (Lit): RAS Error, Not Lit: Power Off.
12 WDT Reset, Mask settings
13 Reset Control
14 Watchdog Timer
15 Hardware Reset

*[1] Be sure to adjust these settings according to your system's specification.

RAS Features

RAS stands for Reliability, Availability and Serviceability. It is a device level monitoring function that provides a variety of features to improve the reliability of the Compact PC BOX's system.

Although the standard set of RAS features used will vary depending on the devices used, the following features provide alarm monitoring.

Feature	Functions Supervised
Alarm Monitoring	Power Voltage Alarm
	Cooling Fan RPM Alarm
	Internal Temperature Alarm
	Watchdog Timer (System uptime)
	SMART Alarm

The Compact PC BOX's RAS software may be programmed to provide the following outputs when one of the alarms mentioned above occurs:

Feature	Functions Supervised
Various Processing Functions	LED Indicator (3 colors,1 lamp)
	Popup Message Output
	Buzzer Output
	System Shutdown
	System Reset

DLL Feature of System Monitor

System Monitor also includes a dynamic link library (API-DLL) feature that gives other applications access to the RAS features.

Accessing the System Monitor

You can monitor the system status at any time using the System Monitor interface. The procedure below shows how to access the System Monitor interface screen:

Step	Action
1	Connect a display to the Compact PC Box.
2	Start your Compact PC BOX.
3	In the task bar, double-click the icon. **Result**: The System Monitor GUI screen appears. 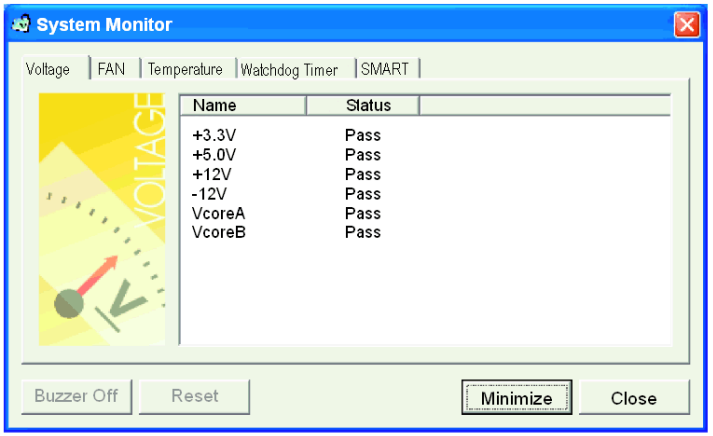

NOTE: If you cannot see the icon in the task bar, launch the System Monitor software by double-clicking the **systemmonitor.exe** file located in the following path: *C:\schneider\sysmon\gui*.

System Monitor Property

Presentation

System Monitor Property screen enables you to specify which system parameters you want to monitor and how you want to be alerted.

Accessing the System Monitor Property

The System Monitor Property screen enables you to configure the Compact PC BOX system parameters you want to monitor and select how you want to be alerted. The procedure below shows how to access the System Monitor Property screen:

Step	Action
1	Connect a display to the Compact PC BOX.
2	Start your MPCKN02-series Compact PC BOX operating system
3	Click **Start** →**Control Panel**. **Result:** The Control Panel window appears
4	Double-click **System Monitor Property** **Result:**The System Monitor Properties window appears: 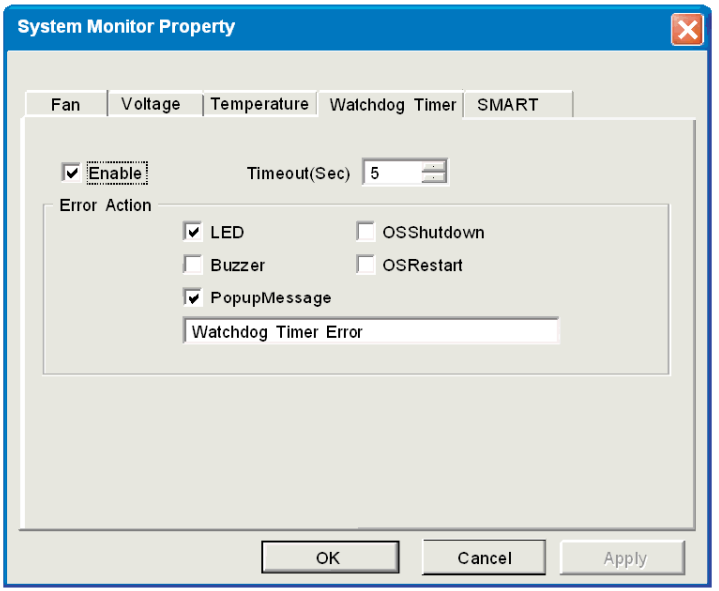

Setting up the System Monitor Properties

The following figure gives an overview of the System Monitor Property setting screen:

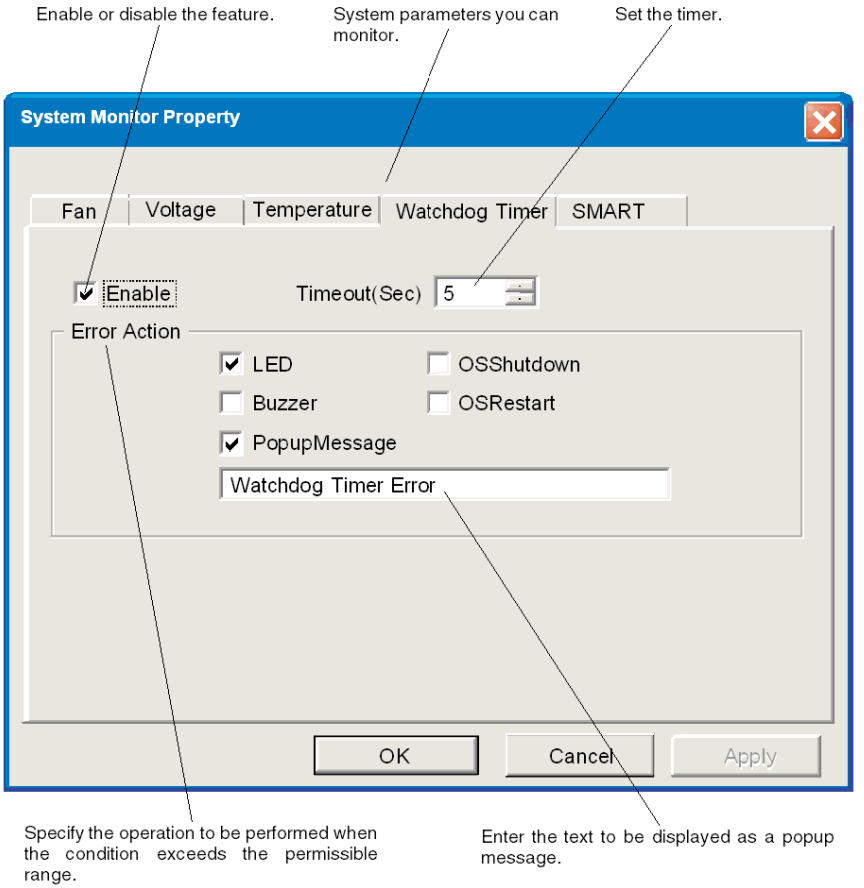

Click the tabs on the top of the screen to access configuration page of each system parameters.

The table below describes the system parameters available for monitoring:

Feature	Functions Supervised
Voltage	Monitors the status of the Compact PC BOX's built-in power supply and internal CPU power supply.
Fan	Monitors the CPU cooling fan RPM speeds.

Feature	Functions Supervised
Temperature	Provides an alert when the temperature of the CPU or the overall system exceeds the defined limit.
Watchdog Timer	This feature monitors the performance of the CPU by writing the uptime count value for the CPU to the built-in programmable timer of the RAS and by periodically clearing the count value from the CPU. Errors are detected when the clearing of the count values from the CPU stops. This causes a timer overflow.
SMART	Monitors the status of the hard drive. Detects degradation in hard disk performance and hard disk errors that may result in data loss or operating system corruption.

CAUTION

HARD DISK DAMAGE

A Self-Monitoring Analysis and Reporting Technology (SMART) Alarm indicates the potential for hard disk damage and data loss. If a SMART Alarm is received:

- Remove the Compact device from service and back up all data on the hard drive.
- Depending on the error, reinstall the operating system or replace the hard disk drive.

Failure to follow these instructions can result in equipment damage.

NOTE: An administrator authentication is required to view or configure SMART monitoring.

- A CF card does not support SMART and therefore the status of the CF card cannot be monitored.
- If a hard drive is to be upgraded or requires replacement, only use a hard drive provided by Schneider Electric. The Compact PC BOX has not been tested with third-party hard drives.

Once you know the system parameters you want to monitor, you can specify actions that will be undertaken when an event (time-out, value out of range...) occurs. Set the action to be performed when a System Monitor/RAS event occurs by selecting the relevant check box.

The following table gives a description of the operations that can be performed:

Item	Action
Enable	Select or deselect this option to enable/disable each monitoring feature.
Buzzer	Sound an electronic beep (this option is automatically disabled when a checkmark is placed in the "OS shutdown" checkbox).
Popup Message	Display error messages as popup messages. (The monitored item and description of the error are displayed).
Operating System shutdown	Shutdown the operating system. (The shutdown confirmation message is not displayed).
Operating System Restart	Reboots the operating system.

Power LED Indicator

The three-color power/RAS LED (see *Compact PC BOX Description, page 26*) indicates the system conditions. It is also a power ON/OFF indicator. The power/RAS LED is located on the front face of the unit.

The Compact PC BOX can send the following system status information to an external device:

LED Color	System Status	Output Condition
Green (Lit)	Normal operation (Power is ON)	None
Green (Blinking)	System is not running (Soft OFF (see *Compact PC BOX Description, page 26*))	None
Orange (Lit)	An RAS alarm has occurred	Power LED is enabled via System Monitor Property
Not lit	Power is OFF	–

Features Availability

The following table lists the operating settings available for each feature:

O: Setting available X: Setting not available

Feature	**Operation**				
-	**Buzzer**	**Popup message**	**OS shutdown**	**Power LED**	**OS Restart**
Watchdog Timer	O	O	O	O	O
Voltage	O	O	O	O	X
Fan	O	O	O	O	X
Temperature	O	O	O	O	X
SMART	O	O	X	O	X

System Monitor Interface

Presentation

You can monitor the system status at any time using the System Monitor interface.

Description of the Interface

The following screen gives an overview of System Monitor. Selecting each of the tabs displays the status of each item. When an error occurs, the color of the tab changes.

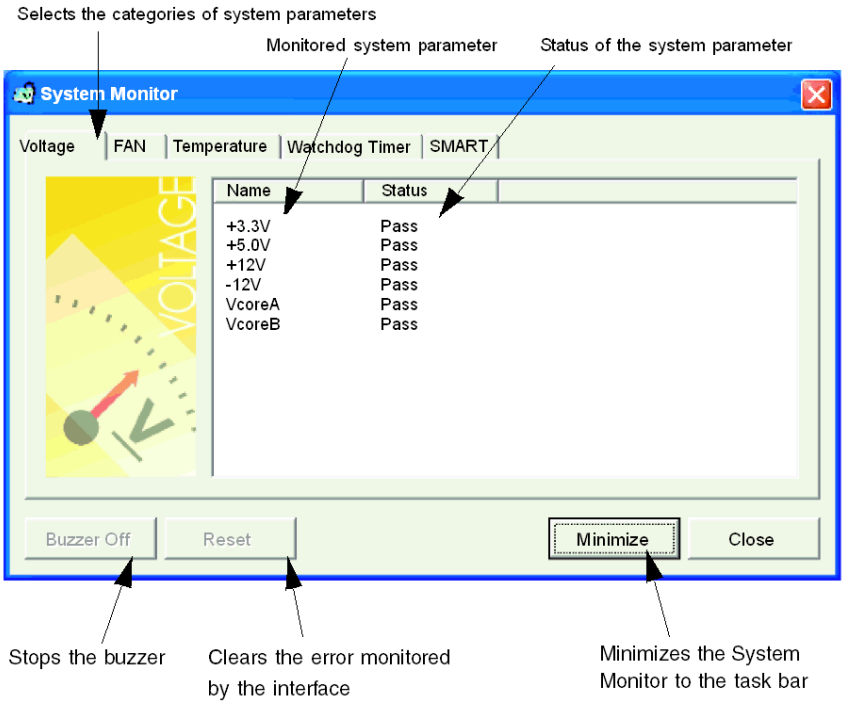

NOTE: Administrator rights are required to view and execute SMART monitoring. If someone logs on without administrator rights, nothing is displayed in the SMART item.

NOTE: On the SMART tab, monitored hard disk drives are designated by a device number of 0 or 1. The device number 0 indicates the master (primary) HDD while the number 1 indicates the slave drive.

The System Monitor displays the status of the system parameters. The following table describes the messages provided by the System Monitor interface:

Display	Meaning
Pass	Normal
Fail	Abnormal (exceeds programmed limits)
Disabled	Monitoring disabled
Not Supported	Not supported

NOTE: "Not Supported" is displayed when a device such as a Compact PC BOX Flash card, which does not support SMART, is detected.

System Monitoring Operation

When an error is detected, the operations specified in the System Monitor Property settings are performed (buzzer, popup message etc.) and an "X" is displayed on the icon in the system tray indicating an error status.

When the icon in the system tray changes as shown below, double-clicking the icon gives an explanation of the error condition.

System Monitor GUI icon when no event occurs

System Monitor GUI icon when a specified event occurs

The system performs the Error Action set in System Monitor Property when an error condition is detected for any monitored item. The Error Action is performed only once when an error is detected for any of the items being monitored.

For example, look at the "+3.3 V" and "+5.0 V" options in the Voltage field. When the popup message feature for monitoring the voltage status is enabled, the popup message **+3.3 V Power Supply Error** is shown on the screen if a +3.3 V power supply error occurs. Press the **OK** button on the dialog box to hide the message.

Example of +3.3 V Power Supply error:

If a +5.0 V power supply error occurs, the popup message **+5.0 V Power Supply Error** is shown on the screen. The popup message displays the monitored item and an error description. When the buzzer feature is enabled, press the **Buzzer Off** button on the popup message to stop the buzzer sound. Press the **OK** button to close the popup message.

When OS Shutdown is enabled, the system automatically enters the shutdown operation without prompting the user for confirmation. To display the System Monitor screen for reviewing the present condition and the Compact PC BOX's system date and time, double click on the icon in the System Tray.

When the buzzer sounds as an Error Action, the System Monitor screen displays the **Buzzer Off** button that is hidden during normal operation. When a popup message window is displayed, the **Buzzer Off** button is displayed in the window.

NOTE: Once an error is detected, the System Monitor stores the error status (displays the icon indicating an error status). To resolve the error, press the **Reset** button on the System Monitor screen or switch off the MPCKN02-series Compact PC BOX unit, perform the actions necessary to remove the cause of the error and power up the Compact PC BOX once more.

System Monitor Error Messages

This section describes the error messages and closing messages displayed on the System Monitor and System Monitor Property screens.

When an error occurs while the popup message option is enabled for Error Action, the following messages are displayed on the popup message output screen under the factory settings.

List of the error messages:

Error Generating Item	Message
VcoreA	VOLT VcoreA Power Supply Error
VcoreB	VOLT VcoreB Power Supply Error
+3.3 V Voltage	VOLT +3.3 V Power Supply Error
+5.0 V Voltage	VOLT +5.0 V Power Supply Error

Error Generating Item	Message
+12 V Voltage	VOLT +12 V Power Supply Error
+2.5 V Voltage	VOLT +2.5 V Power Supply Error
–12 V Voltage	VOLT –12 V Power Supply Error
CPU Fan	FAN CPU Fan Error
System Temperature	TEMP System Temperature Error
CPU Temperature	TEMP CPU Temperature Error
Watchdog Timer	Watchdog Timer Error
SMART	SMART Error

Example of displayed screen:

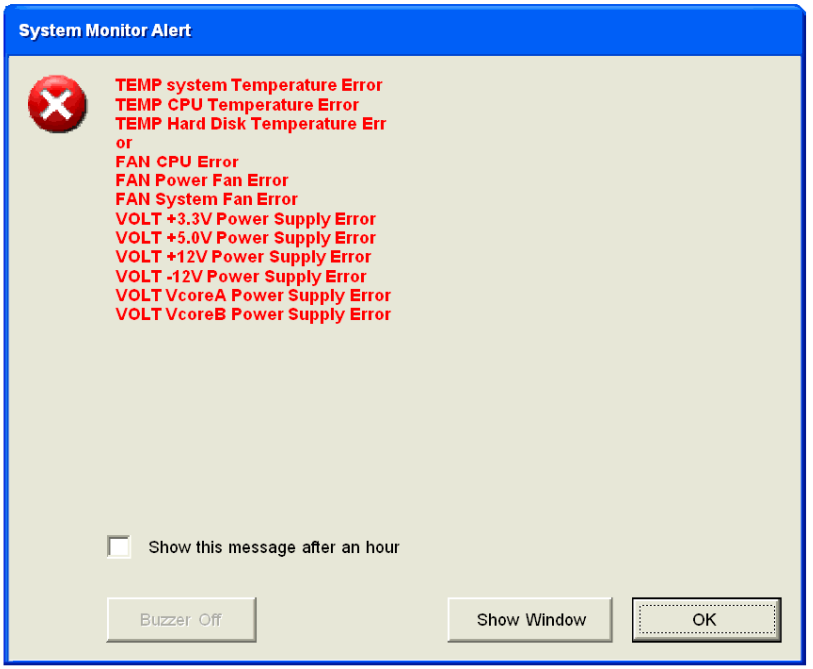

NOTE: You can modify the messages displayed on the popup message from the System Monitor Property screen.

Error Displays when Using the Event Viewer

The System Log records error type/location and error actions as error events. You can check the error event information using the Event Viewer.

The following table shows you how to access the Event Viewer:

Step	Action
1	Start your Compact PC BOX terminal.
2	Click **Start** →**Control Panel** →**Administrative Tools** →**Event Viewer**.

NOTE: This feature is supported by Windows® XP Pro.

Error Type/Location and Error Action

The error type/locations shown by the Event Viewer are shown in the table below:

Error type/Location	Error Message Description
VcoreA	Vcore A Error has occurred
VcoreB	Vcore B Error has occurred
+3.3 V Voltage	+3.3 V Error has occurred
+5.0 V Voltage	+5.0 V Error has occurred
+12 V Voltage	+12 V Error has occurred
+2.5 V Voltage	+2.5 V Error has occurred
–12 V Voltage	–12 V Error has occurred
CPU Fan	CPU Fan Error has occurred
System Temperature	System Temperature Error has occurred
CPU Temperature	CPU Temperature Error has occurred
Watchdog Timer	Watchdog Timer Error has occurred
SMART	SMART Error has occurred. Attribute (No.) (Attribute Name) Device (No.) (HD Model). The descriptions in parentheses vary depending on which error has occurred and which device it has occurred on. (0: Master, 1: Slave)

The actions taken when an error occurs and which are shown by the Event Viewer, are shown in the table below.

Type of Alert	Error Message
Buzzer	Buzzer has sounded because of an "xx" error.
Popup Message	Popup message has been displayed because of an "xx" error.
OS Shutdown	Windows® has been shutdown due to an "xx" error.

NOTE:

- The data shown in the table uses "xx" to indicate the error type/location
- The actions taken by the system after an error occurs are set via the System Monitor Property screen.
- When a +3.3 V error occurs and the buzzer sounds, two errors will be displayed by the Event Viewer: **+3.3 V Error has occurred** and **Buzzer has sounded because of a +3.3 V error**.

Maintenance

11

Subject of this Chapter

This chapter covers maintenance of the MPCKN02-series Compact PC BOX.

What's in this Chapter?

This chapter contains the following topics:

Topic	Page
Reinstallation Procedure	100
Regular Cleaning and Maintenance	102

Reinstallation Procedure

At a Glance

In certain cases, it may be necessary to reinstall the operating system. The reinstallation procedure is given below.

⚠ DANGER

HAZARD OF ELECTRIC SHOCK, EXPLOSION, OR ARC FLASH

- Remove all power from the device before removing any covers or elements of the system, and prior to installing or removing any accessories, hardware, or cables.
- Unplug the power cable from both the Compact PC BOX and the AC power supply.
- Always use a properly rated voltage sensing device to confirm power is off.
- Replace and secure all covers or elements of the system before applying power to the unit.
- Use only the specified voltage when operating your MPCKN02-series Compact PC BOX. This unit is designed to use 100...240 Vac.

Failure to follow these instructions will result in death or serious injury.

⚠ CAUTION

OVERTORQUE AND LOOSE HARDWARE

- Do not exert more than 0.6 N•m (5.3 lb-in) of torque when tightening the installation fastener, enclosure, accessory, or terminal block screws. Tightening the screws with excessive force can damage the plastic casing of the Compact PC BOX.
- When installing or removing screws, ensure that they do not fall inside the Compact PC BOX's chassis.

Failure to follow these instructions can result in injury or equipment damage.

CAUTION

STATIC SENSITIVE COMPONENTS

Compact PC BOX internal components, including accessories such as RAM modules and expansion boards, can be damaged by static electricity. Observe the electrostatic precautions below when handling such components.

Failure to follow these instructions can result in equipment damage.

Precautions to be taken:

- Keep static-producing materials (plastic, upholstery, carpeting) out of the immediate work area.
- Do not remove ESD-sensitive components from their anti-static bags until you are ready to install them.
- When handling static-sensitive components, wear a properly grounded wrist strap (or equivalent).
- Avoid unnecessary contact with exposed conductors and component leads with skin or clothing.

Before Reinstallation

Before reinstalling the operating system, make sure that the following equipment is available:

- Reinstallation CD-ROMs that were provided with the product.
- An external CD-ROM drive connected on the Magelis USB port.
- An external keyboard connected on a USB port.

Setting Up the Equipment

- Shut down Windows® in an orderly fashion and remove all power from the device. Then, follow the applicable instructions in *Removing the Compact PC BOX's Cover, page 68*
- Remove all PCI or PCMCIA extension boards.
- Disconnect all external peripherals except the external USB CD-ROM drive and the keyboard.
- In "BIOS Setup" press F9 to initialize default values and in the "Boot" menu, select the "USB CD-ROM" option representing your external CD-ROM drive as the first boot device.

NOTE: Save all important data on the hard drive or Compact Flash card (the reinstallation process erases all data on them). The reinstallation process will return the computer to its factory settings.

NOTE: The restoration program runs only under Windows® 2000 and Windows® XP. Other Windows versions and operating systems are not supported. Also, some Compact Flash readers connected using the USB port do not function with this utility.

Reinstallation: Restoring the Operating System on Compact iPC and PC Box Devices

Refer to the relevant procedure in the Installation Guide, reference 35012221.

Regular Cleaning and Maintenance

Cleaning Solutions

⚠ CAUTION

HARMFUL CLEANING SOLUTIONS

- Do not clean the unit or any component of the unit with paint thinner, organic solvents, or strong acids.
- Use only a mild soap or detergent that will not harm the polycarbonate material of the screen.

Failure to follow these instructions can result in injury or equipment damage.

Removing and Cleaning the Fan Filter

Since excessive dirt and dust in the filter of the Compact PC BOX's electric fan can potentially affect the performance of the unit, regular inspection and cleaning of the filter is strongly recommended.

⚠ DANGER

HAZARD OF ELECTRIC SHOCK, EXPLOSION OR ARC FLASH

Read and understand the safety information on previous pages (see *Reinstallation Procedure, page 100*) before attempting this procedure.

Failure to follow these instructions will result in death or serious injury.

The table below describes how to remove and to clean the fan filter:

Step	Action
1	Shut down Windows® in an orderly fashion and remove all power from the device, then remove the power cable.
2	Remove the two screws on the Fan Cover and remove the cover: 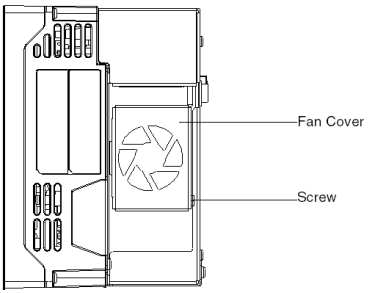 **Right side**
3	Remove the filter.
4	Clean the filter completely. If dirt or stains are present, wash the filter with a neutral detergent. **Note:** ● Do not wring the filter to dry it. ● When drying the filter, dry it without exposing it to direct sunlight. ● Allow it to air dry completely before reattaching to the Compact PC BOX. ● After fixing the filter to the filter cover, reattach the fan cover. 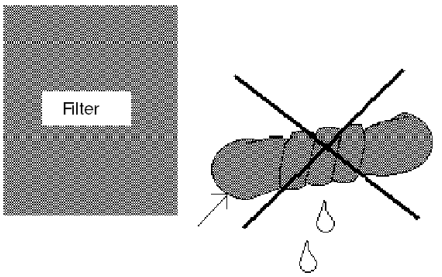
5	Install the filter.
6	Install the Fan Cover and tighten with the two screws. Use a torque of 0.5 to 0.6 N·m (4.4 to 5.3 lb-in). Ensure that the Fan Cover is securely attached to the Compact PC BOX.
7	Install the Power Cord.

Lithium Battery

⚠ DANGER

HAZARD OF ELECTRIC SHOCK, EXPLOSION OR ARC FLASH

Read and understand the safety information on previous pages (see *Reinstallation Procedure, page 100*) before attempting this procedure.

Failure to follow these instructions will result in death or serious injury.

⚠ DANGER

EXPLOSION, FIRE, OR CHEMICAL HAZARD

Follow these instructions for the Lithium batteries:

- Do not recharge, disassemble, heat above 100 °C (212 °F), or incinerate.
- Recycle or properly dispose of used batteries.
- Replace with identical type.
- Follow all battery manufacturer's instructions.

Failure to follow these instructions will result in death or serious injury.

The MPCKN02-series Compact PC BOX contains a lithium battery, which is used to save certain system data such as the date and time.

NOTE: The Lithium battery in a Compact PC BOX is located under the hard disk drive (HDD). The HDD is a delicate device. Handling of a HDD requires special consideration, and should only be undertaken by personnel experienced in such operations. If you have qualified personnel, and decide to perform a battery replacement, contact Schneider technical support for more information.

Periodic Inspection

Be sure to inspect your Compact PC BOX periodically to determine its general condition. For example:

- Are all power cords and cables connected properly? Have any become loose?
- Are all mounting brackets holding the unit securely?
- Is the ambient temperature within the specified range?

Troubleshooting

12

Troubleshooting

Troubleshooting Checklists

This section explains how to find and resolve troubleshooting items with the MPCKN02-series Compact PC BOX.

The Compact PC BOX can be connected to a wide range of devices, including a host (PLC), however, this manual will not discuss every possible device or condition. For problems not directly related to the Compact PC BOX, refer to that device's manual.

The most likely items for troubleshooting that can occur during usage of the Compact PC BOX are:

- Connected devices cannot be used.

When one occurs, be sure to first read each checklist item and follow the instructions given. If this does not solve the problem, please contact your local Compact PC BOX distributor.

When a hardware or software issue occurs that you cannot resolve, please contact the distributor where you purchased the Compact PC BOX.

Connected Devices cannot be Used

Step	Check Item or Operation	Check Result	Action Required
1	Switch OFF the Compact PC BOX's power supply.		
2	Is the power cord connected correctly?		Connect the power cord correctly.
3	Are the peripheral devices connected correctly?		Follow the instructions described in the respective manual.
4	Switch ON the Compact PC BOX's power supply.		
5	Does this device require driver setup?		Refer to the device's manual and setup the driver.
–	Has the issue been resolved?		If not, please contact the distributor where the Compact PC BOX was purchased.

Appendices

IV

Accessories

13

Accessories for the Compact PC BOX

List

Accessories are available as options. The list of accessories available for the Compact PC BOX is shown below:

Description	Reference
RAM module - 1GB	MPC YK22 RA 1024
Compact Flash - 2 GB - Empty	MPC YN00 CF 200N
Compact Flash - 4 GB - Empty	MPC YN00 CF 400N

Index

A

Accessing the BIOS, *59*
Accessories for the Compact PC BOX, *109*
APRIL 2000/3000, *82*

B

Before Modifications, *66*

C

Characteristics, *34*
Cleaning and Maintenance, *102*
Compact Flash (CF) Card Installation and Removal, *74*
Compact PC BOX Description, *26*
Connecting
    AC Power Cord, *57*
Connection to PLCs, *81*
CPU Characteristics, *32*

D

Data Writing Limitation, *75*
Dedicated Ground, *54*
Dimensions, *38*
Dimensions of the Compact PC BOX, *38*
Dimensions with Installation Fasteners installed, *40*

E

Environmental Characteristics, *35*
Exit BIOS saving the Modifications, *63*
Exit BIOS Without Saving Modifications, *63*
Expansion Board (PCI) Installation, *72*
Extended Memory, *61*

F

First power-up, *51*
Flash Disk Characteristics, *34*

I

Inserting the CF Card, *75*
Installing the Expansion Board, *72*
Introduction, *32*
Items, *24*

L

Lithium Battery, *104*

M

Main Menu, *60*

N

Nano, Micro, Premium, *81*

O

Operating Systems, *33*
Overview, *66*

P

Package Contents, *24*
Password Security, *62*
Periodic Inspection, *104*
Power Supply, *32*
Pre-Installed Packs, *33*
Preparing to install the Compact PC BOX, *42*
Preparing to Use a CF Card, *74*
Primary Master, *61*
Primary Slave, *61*

R

Reinstallation Procedure, *100*
Removing and Cleaning the Fan Filter, *102*
Removing the CF Card, *75*

S

Series 7, *81*
Shared Ground - Avoid Ground Loop, *55*
Shared Ground Allowed, *55*
Shared Ground not Allowed , *55*
Structural and Electrical Characteristics, *32*
Supervisor Password, *62*
System Date, *61*
System Memory, *61*
System Monitor
    access, *87*
    interface, *93*
    overview, *84*
System Monitor Property, *88*
System Time, *60*

T

TSX 17, *82*

U

USB Holder Attachment, *77*
USB Holder Attachment/Removal, *76*
USB Holder Removal, *78*
Useful Tools, *52*
User Password, *63*