Contents

Variable speed drives for asynchronous motors Altivar 21

Selection guide . . . . . *page 2*

■ **Presentation** . . . . . *page 4*

■ **Variable speed drives Altivar 21**

- □ Characteristics . . . . . *page 8*
- □ Reduction of current harmonics . . . . . *page 14*
- □ Operation . . . . . *page 16*
- □ References . . . . . *page 18*

■ **Options**

- □ Accessories, dialogue . . . . . *page 20*
- □ Communication buses and networks . . . . . *page 22*
- □ Additional EMC input filters . . . . . *page 26*
- □ Motor chokes . . . . . *page 28*

■ **Dimensions** . . . . . *page 30*

■ **Schemes** . . . . . *page 36*

■ **Electromagnetic compatibility** . . . . . *page 38*

■ **Motor starters** . . . . . *page 40*

■ **Mounting and installation recommendations** . . . . . *page 44*

■ **Functions** . . . . . *page 54*

Variable speed drives for asynchronous and synchronous motors

Type of machine		Simple machines		Pumps and fans (building (HVAC)) *(1)*
Power range for 50…60 Hz (kW) line supply		**0.18…4**	**0.18…15**	**0.75…75**
	Single-phase 100…120 V (kW)	0.18…0.75	–	–
	Single-phase 200…240 V (kW)	0.18…2.2	0.18…2.2	–
	Three-phase 200…230 V (kW)	–	–	–
	Three-phase 200…240 V (kW)	0.18…4	0.18…15	0.75…30
	Three-phase 380…480 V (kW)	–	–	0.75…75
	Three-phase 380…500 V (kW)	–	0.37…15	–
	Three-phase 525…600 V (kW)	–	0.75…15	–
	Three-phase 500…690 V (kW)	–	–	–
Drive	Output frequency	0.5…400 Hz	0.5…500 Hz	0.5…200 Hz
	Type of control – Asynchronous motor	Standard (voltage/frequency) Performance (sensorless flux vector control) Pump/fan (Kn^2 quadratic ratio)	Standard (voltage/frequency) Performance (sensorless flux vector control) Energy saving ratio	Sensorless flux vector control Voltage/frequency ratio (2 points) Energy saving ratio
	Synchronous motor	–		
	Transient overtorque	150…170% of the nominal motor torque	170…200% of the nominal motor torque	110% of the nominal motor torque
Functions				
Number of functions		40	50	50
Number of preset speeds		8	16	7
Number of I/O	Analog inputs	1	3	2
	Logic inputs	4	6	3
	Analog outputs	1	1	1
	Logic outputs	1	–	–
	Relay outputs	1	2	2
Communication	Embedded	Modbus	Modbus and CANopen	Modbus
	Available as an option	–	CANopen Daisy chain, DeviceNet, PROFIBUS DP, Modbus TCP, Fipio	LonWorks, METASYS N2, APOGEE FLN, BACnet
Cards (available as an option)		–		
Standards and certifications		IEC/EN 61800-5-1, IEC/EN 61800-3 (environments 1 and 2, categories C1 to C3) CE, UL, CSA, C-Tick, NOM, GOST		EN 55011: Group 1, class A and class B with option card, CE, UL, CSA, C-Tick, NOM
References		**ATV 12**	**ATV 312**	**ATV 21**
Pages		Please consult our catalogue "Variable speed drives Altivar 12"	Please consult our catalogue "Variable speed drives Altivar 312"	18 and 19

(1) Heating Ventilation Air Conditioning

Pumps and fans (industrial)	Complex machines
0.37…800	**0.37…630**
–	–
0.37…5.5	0.37…5.5
–	–
0.75…90	0.37…75
0.75…630	0.75…500
–	–
–	–
2.2…800	1.5…630
0.5…500 Hz across the entire range 0.5…1000 Hz up to 37 kW at 200…240 V ∿ and 380…480 V ∿	1…500 Hz across the entire range 1…1600 Hz up to 37 kW at 200…240 V ∿ and 380…480 V ∿
Sensorless flux vector control Voltage/frequency ratio (2 or 5 points) Energy saving ratio	Flux vector control with or without sensor Voltage/frequency ratio (2 or 5 points) ENA System
Vector control without speed feedback	Vector control with or without speed feedback
120...130% of the nominal motor torque for 60 seconds	220% of the nominal motor torque for 2 seconds 170% for 60 seconds
> 100	> 150
8	16
2…4	2…4
6…20	6…20
1…3	1…3
0…8	0…8
2…4	2…4
Modbus and CANopen	
Modbus TCP, Fipio, Modbus/Uni-Telway, Modbus Plus, EtherNet/IP, DeviceNet, PROFIBUS DP, PROFIBUS DP V1, InterBus, CC-Link, LonWorks, METASYS N2, APOGEE FLN, BACnet	Modbus TCP, Fipio, Modbus/Uni-Telway, Modbus Plus, EtherNet/IP, DeviceNet, PROFIBUS DP, PROFIBUS DP V1, InterBus, CC-Link
I/O extension cards, “Controller Inside” programmable card, multi-pump cards	Interface cards for incremental, resolver, SinCos, SinCos Hiperface®, EnDat® or SSI encoders, I/O extension cards, “Controller Inside” programmable card, overhead crane card
IEC/EN 61800-5-1, IEC/EN 61800-3 (environments 1 and 2, C1 to C3), IEC/EN 61000-4-2/4-3/4-4/4-5/4-6/4-11, CE, UL, CSA, DNV, C-Tick, NOM, GOST	
ATV 61	**ATV 71**
Please consult our catalogue “Variable speed drives Altivar 61”	Please consult our catalogue “Variable speed drives Altivar 71”

Variable speed drives
Altivar 21

100074-54-Q

Ventilation application

Presentation

The Altivar 21 drive is a frequency inverter for 0.75 kW to 75 kW three-phase asynchronous motors.

It has been designed for state-of-the-art applications for the building market (HVAC) in the service industry:
- Ventilation
- Heating and air conditioning
- Pumping

The Altivar 21 drive was designed to ensure electromagnetic compatibility and to reduce current harmonics.

Its various standard versions make it possible to reduce installation costs by offering class A or class B EMC filters with the following advantages:
- More compact size
- Simplified wiring, thus reduced cost

Thanks to its reduced capacitor technology, the Altivar 21 drive offers immediate, disturbance-free operation. This technology avoids having to resort to additional options such as a line choke or DC choke to deal with current harmonics.

It is operational from the moment the power is turned on.

600244-54-Q

Air conditioning application

Applications

The Altivar 21 drive considerably improves building management by:
- Significant energy savings of up to 70%
- Simplifying circuits by removing flow control valves and paddle valves
- Reducing noise pollution
- Offering flexibility and ease of adjustment for installations, thanks to building management system connectivity

It can easily be adapted to all building management systems thanks to its numerous functions and Modbus protocol integrated as standard.
With the communication cards offered, LonWorks, METASYS N2, APOGEE FLN and BACnet, the Altivar 21 is the ideal drive for the building market (HVAC “Heating, Ventilation, Air conditioning”).

Flexibility and user-friendliness

The Altivar 21 drive has an integrated display terminal. This terminal is used to identify and determine the active command channels (run command and speed reference).

It also enables:
- Direct access to the last five modified parameters
- Identification of the different factory-set parameters in the form of a list in a menu
- Backup of the customer configuration

The Altivar 21 drive offers a quick setup function in the form of its "Quick menu", which includes the 10 key parameters for the installation (acceleration, deceleration, motor parameters, etc.).

Characteristics: page 8
References: page 18
Dimensions: page 30
Schemes: page 36
Functions: page 54

62882-54-Q

Pumping application

Functions

The Altivar 21 drive gets your applications up and running immediately, and settings can be entered quickly and easily thanks to its “Quick menu”.

Functions designed specifically for building applications (HVAC and pumping)

The Altivar 21 drive combines all the functions that your applications require:
- Energy saving ratio, quadratic voltage/frequency ratio
- Automatic catching of a spinning load with speed detection
- Adaptation of current limiting according to speed
- Noise and resonance suppression by means of the switching frequency, which is adjustable up to 16 kHz during operation
- Preset speeds
- Integrated PID regulator with preset references and automatic/manual ("Auto/Man.") mode
- Electricity and service hours meter
- Switching of command channels (references and run command) using the LOC/REM key
- Sleep/wake-up function
- Automatic ramp adaptation
- Ramp switching
- Reference calibration and limitation
- Switching between two sets of motor rating plates

Protection functions

The Altivar 21 drive combines all the protection functions that your applications require:
- Motor and drive thermal protection, by a built-in PTC thermistor probe
- Protection against overloads and overcurrents in continuous operation
- Machine mechanical protection via jump frequency function
- Protection of the installation by means of underload and overload detection
- Protection via management of multiple faults and configurable alarms

Continuity of service

The safety of the installation is assured by means of the forced operation function with configurable fault inhibiting, direction of operation and configurable references.

Variable speed drives
Altivar 21

ATV 21HD75N4

ATV 21H075M3X

ATV 21WD18N4,
ATV 21WD18N4C

ATV21W075N4,
ATV 21W075N4C

The offer

The Altivar 21 range of variable speed drives extends across a range of motor power ratings from 0.75 kW to 75 kW with the following types of power supply:
- 200…240 V three-phase, 0.75 kW to 30 kW, UL Type 1/IP 20 (**ATV 21H●●●M3X**)
- 380…480 V three-phase, 0.75 kW to 75 kW, UL Type 1/IP 20 (**ATV 21H●●●N4**)
- 380…480 V three-phase, 0.75 kW to 75 kW, UL Type 12/IP 54 (**ATV 21W●●●N4** and **ATV 21W●●●N4C**)

Altivar 21 drives are compact UL Type 1/IP 20 or UL Type 12/IP 54 products which meet electromagnetic compatibility requirements and reduce current harmonics.

Conformity to standards

The entire range conforms to international standards IEC/EN 61800-5-1, IEC/EN 61800-2, IEC/EN 61800-3, is UL, CSA, C-Tick, NOM certified and has been developed to meet the requirements of environmental protection directives (RoHS, WEEE, etc.) as well as those of European Directives to obtain the CE mark.

Electromagnetic compatibility (EMC)

The incorporation of EMC filters in **ATV 21●●●●N4** drives and the recognition of EMC requirements simplifies installation and provides an economical means of ensuring machines meet CE marking requirements.

ATV 21W●●●N4C drives have integrated class B EMC filters, which make them compliant with the requirements of EN 55011 (class B group 1) and IEC/EN 61800-3 (category C1) standards.

ATV 21H●●●M3X drives have been designed without an EMC filter. Filters are available as an option and can be installed by the user to reduce emission levels (see pages 26 and 27).

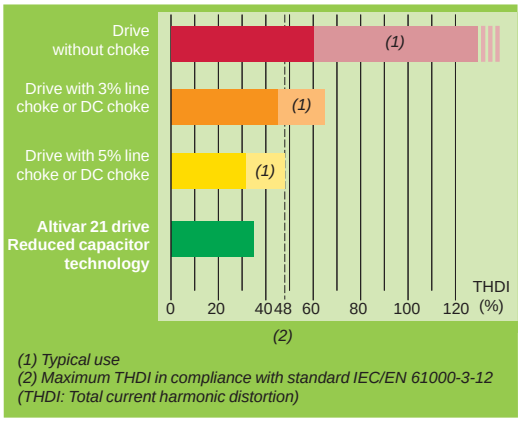

Reduced capacitor technology: reduction of current harmonics

Innovative technology, reduced capacitor technology

This technology means there is no need to add options to deal with current harmonics. This makes it possible to obtain a THDI *(1)* of less than 35%, a much lower value than the 48% level of THDI imposed by standard IEC/EN 61000-3-12.

With the Altivar 21 range, you avoid both the cost of adding a line choke or DC choke and the time spent on wiring, while optimizing the enclosure size.

This technology can also triple the service life of the DC capacitors.

In November 2008, Schneider Electric received the Frost & Sullivan Innovation Award for this innovation:

(1) THDI: Total current harmonic distortion

Installation

The compact nature of the Altivar 21 range simplifies installation and reduces costs by optimizing the size of enclosures (whether floor-standing or wall-mounted).

Altivar 21 drives can be mounted side by side (see page 44).
They can also be wall-mounted in compliance with UL Type 1 requirements using kits **VW3 A31 81●** and **VW3 A9 20●** (see page 20).

They have been designed to operate in an enclosure at an ambient temperature of:
- +40°C or +50°C depending on the model, without derating
- Up to +50°C or +60°C depending on the model, with derating (see curves on pages 45 to 49)

Documentation

The Altivar 21 range is also presented on DVD-ROM which includes all the Schneider Electric documentation on variable speed drives and soft start/soft stop units.

The DVD-ROM includes:
- Technical documentation (programming manuals, installation manuals, instruction sheets)
- Brochures
- Catalogues

Description	Reference	Weight kg
"Description of the Motion & Drives Offer" DVD-ROM	**VW3 A8 200**	0.100

Environmental characteristics

Conformity to standards			Altivar 21 drives have been developed to conform to the strictest international standards and the recommendations relating to electrical industrial control devices (IEC, EN), in particular: low voltage, IEC/EN 61800-5-1, IEC/EN 61800-3 (conducted and radiated EMC immunity and emissions)
EMC immunity			IEC/EN 61800-3, environments 1 and 2 IEC/EN 61000-4-2 level 3 IEC/EN 61000-4-3 level 3 IEC/EN 61000-4-4 level 4 IEC/EN 61000-4-5 level 3 IEC/EN 61000-4-6 level 3 IEC/EN 61000-4-11 *(1)*
Conducted and radiated EMC emissions for drives			IEC/EN 61800-3, environments 1 and 2, category C1, C2 or C3
	ATV 21H●●●M3X		With additional EMC filter *(2)*: ■ EN 55011 class A group 1, IEC/EN 61800-3 category C2 or C3 ■ EN 55011 class B group 1, IEC/EN 61800-3 category C1
	ATV 21H●●●N4		EN 55011 class A group 1, IEC/EN 61800-3 category C2 or C3 With additional EMC filter *(2)*: ■ EN 55011 class B group 1, IEC/EN 61800-3 category C1
	ATV 21W●●●N4		EN 55011 class A group 1, IEC/EN 61800-3 category C2 or C3
	ATV 21W●●●N4C		EN 55011 class B group 1, IEC/EN 61800-3 category C1
CE Marking			The drives are CE marked according to the European low voltage (2006/95/EC) and EMC (2004/108/EC) directives
Product certification			UL, CSA, C-Tick and NOM
Degree of protection			IEC/EN 61800-5-1, IEC/EN 60529
	ATV 21H●●●M3X ATV 21H●●●N4		IP 21 and IP 41 on upper part IP 20 without blanking plate on upper part of cover UL Type 1 with accessories VW3 A31 814…817 and VW3 A9 206…208 (see page 20)
	ATV 21W●●●N4 ATV 21W●●●N4C		IP 54/UL Type 12
Vibration resistance			1.5 mm peak to peak from 3…13 Hz, 1 gn from 13…200 Hz, conforming to IEC/EN 60068-2-6
Shock resistance			15 gn for 11 ms in accordance with IEC 60068-2-27
Maximum ambient pollution	ATV 21H075M3X…HD18M3X ATV 21H075N4…HD18N4 ATV 21W075N4…WD18N4 ATV 21W075N4C...WD18N4C		Degree 2 according to IEC/EN 61800-5-1
	ATV 21HD22M3X, HD30M3X ATV 21HD22N4…HD75N4 ATV 21WD22N4…WD75N4 ATV 21WD22N4C...WD75N4C		Degree 3 according to IEC/EN 61800-5-1
Environmental conditions			IEC 60721-3-3 classes 3C1 and 3S2
Relative humidity			5…95% without condensation or dripping water conforming to IEC 60068-2-3
Ambient air temperature around the device	Operation	**°C**	For ATV 21H●●●M3X and ATV 21H●●●N4 drives: - 10…+ 50 without derating; up to +60°C with derating (see derating curves on pages 45 to 49) For ATV 21W●●●N4 and ATV 21W●●●N4C drives: - 10…+ 40 without derating; up to + 50 °C with derating (see derating curves on pages 50 to 51)
	Storage	**°C**	- 25…+ 70
Maximum operating altitude		**m**	1000 without derating 1000…3000 derating the current by 1% per additional 100 m. Limited to 2000 m for the corner-grounded distribution network.
Operating position Maximum permanent angle in relation to the normal vertical mounting position			

(1) Drive response depends on the drive configuration (see pages 66, 67, 70 and 71).
(2) See table on page 27 to check permitted cable lengths.

Drive characteristics

Output frequency range		**Hz**	0.5…200
Configurable switching frequency	ATV 21H075M3X…HD15M3X ATV 21H075N4…HD15N4	**kHz**	Nominal switching frequency: 12 kHz without derating in continuous operation. Adjustable during operation from 6…16 kHz. Above 12 kHz, see the derating curves on pages 45 to 47.
	ATV 21HD18M3X…HD30M3X ATV 21HD18N4…HD75N4	**kHz**	Nominal switching frequency: 8 kHz without derating in continuous operation. Adjustable during operation from 6…16 kHz. Above 8 kHz, see the derating curves on pages 46 to 49.
	ATV 21W075N4…WD15N4 ATV 21W075N4C…WD15N4C	**kHz**	Nominal switching frequency: 12 kHz without derating in continuous operation. Adjustable during operation from 6…16 kHz. Above 12 kHz, see the derating curves on page 50.
	ATV 21WD18N4…WD75N4 ATV 21WD18N4C…WD75N4C	**kHz**	Nominal switching frequency: 8 kHz without derating in continuous operation. Adjustable during operation from 6…16 kHz. Above 8 kHz, see the derating curves on pages 50 and 51.
Speed range			1…10
Speed accuracy	For a torque variation of 0.2 Tn to Tn		± 10% of nominal slip, without speed feedback
Torque accuracy			± 15 %
Transient overtorque			120% of the nominal motor torque (typical value at ± 10%) for 60 s
Maximum transient current			110% of the nominal drive current for 60 s (typical value)
Motor control profile	Asynchronous motor		Energy saving ratio Quadratic voltage/frequency ratio Constant voltage/frequency ratio Constant voltage/frequency ratio with automatic IR compensation Sensorless Flux Vector Control (FVC) (current vector)
	Synchronous motor		Current flux vector control without speed feedback
Frequency loop			PI regulator with adjustable structure for a speed response adapted to the machine (accuracy, speed)
Slip compensation			Automatic whatever the load. Can be inhibited or adjusted. Not available with voltage/frequency ratios

Electrical power characteristics

Power supply	Voltage	**V**	200 - 15%...240 + 10% three-phase for ATV 21H●●●M3X 380 - 15%...480 + 10% three-phase for ATV 21●●●●N4 and ATV 21W●●●N4C
	Frequency	**Hz**	50 - 5%...60 + 5%
Signalling			1 red LED: LED lit indicates the presence of voltage on the drive DC bus
Output voltage			Maximum three-phase voltage equal to line supply voltage
Drive noise level			Conforming to directive 86-188/EEC
	ATV 21H075M3X…HU75M3X ATV 21H075N4…HD11N4	**dBA**	51
	ATV 21HD11M3X…HD18M3X ATV 21HD15N4, HD18N4	**dBA**	54
	ATV 21HD22M3X ATV 21HD22N4, HD30N4	**dBA**	59.9
	ATV 21HD30M3X	**dBA**	63.7
	ATV 21HD37N4, HD45N4	**dBA**	64
	ATV 21HD55N4, HD75N4	**dBA**	63.7
	ATV 21W075N4…WU22N4 ATV 21W075N4C…WU22N4C	**dBA**	48
	ATV 21WU30N4…WU75N4 ATV 21WU30N4C…WU75N4C	**dBA**	55
	ATV 21WD11N4, WD15N4 ATV 21WD11N4C, WD15N4C	**dBA**	57.4
	ATV 21WD18N4 ATV 21WD18N4C	**dBA**	60.2
	ATV 21WD22N4, WD30N4 ATV 21WD22N4C, WD30N4C	**dBA**	59.9
	ATV 21WD37N4, WD45N4 ATV 21WD37N4C, WD45N4C	**dBA**	64
	ATV 21WD55N4, WD75N4 ATV 21WD55N4C, WD75N4C	**dBA**	63.7
Electrical isolation			Between power and control (inputs, outputs, power supplies)

Connection cable characteristics

Type of cable for	Mounting in an enclosure		Single-strand IEC cable, ambient temperature 45°C, copper 90°C XLPE/EPR or copper 70°C PVC
	Mounting with UL Type 1 kit		3-strand UL 508 cable except for choke (2-strand UL 508 cable), ambient temperature 40°C, copper 75°C PVC

Connection characteristics (drive terminals for the line supply and the motor output)

Drive terminals			**L1/R, L2/S, L3/T**	**U/T1, V/T2, W/T3**
Maximum wire size and tightening torque	ATV 21H075M3X…HU40M3X		6 mm², AWG 10 1.3 Nm, 11.5 lb.in	
	ATV 21HU55M3X, HU75M3X		16 mm², AWG 6 2.5 Nm, 22 lb.in	
	ATV 21HD11M3X…HD18M3X		25 mm², AWG 3 4.5 Nm, 40 lb.in	
	ATV 21HD22M3X		50 mm², AWG 1/0 24 Nm, 212 lb.in	
	ATV 21HD30M3X		150 mm², 300 MCM 41 Nm, 360 lb.in	
	ATV 21H075N4…HU55N4		6 mm², AWG 10 1.3 Nm, 11.5 lb.in	
	ATV 21HU75N4, HD11N4		16 mm², AWG 6 2.5 Nm, 22 lb.in	
	ATV 21HD15N4, HD18N4		25 mm², AWG 3 4.5 Nm, 40 lb.in	
	ATV 21HD22N4…HD45N4		50 mm², AWG 1/0 24 Nm, 212 lb.in	
	ATV 21HD55N4, HD75N4		150 mm², 300 MCM 41 Nm, 360 lb.in	
	ATV 21W075N4…WU55N4 ATV 21W075N4C…WU55N4C		6 mm², AWG 10 1.3 Nm, 11.5 lb.in	
	ATV 21WU75N4 ATV 21WU75N4C		16 mm², AWG 6 2.5 Nm, 22 lb.in	
	ATV 21WD11N4, WD15N4		16 mm², AWG 4 3 Nm, 26.5 lb.in	
	ATV 21WD11N4C, WD15N4C		10 mm², AWG 6 1.7 Nm, 15 lb.in	16 mm², AWG 4 3 Nm, 26.5 lb.in
	ATV 21WD18N4		25 mm², AWG 3 5.4 Nm, 48 lb.in	
	ATV 21WD18N4C		16 mm², AWG 4 2.2 Nm, 19.5 lb.in	25 mm², AWG 3 5.4 Nm, 48 lb.in
	ATV 21WD22N4, WD30N4		50 mm², AWG 1/0 24 Nm, 212 lb.in	
	ATV 21WD22N4C, WD30N4C		25 mm², AWG 3 4.3 Nm, 38 Nm	50 mm², AWG 1/0 24 Nm, 212 lb.in
	ATV 21WD37N4, WD45N4		50 mm², AWG 1/0 24 Nm, 212 lb.in	
	ATV 21WD37N4C, WD45N4C		50 mm², AWG 1/0 7 Nm, 62 lb.in	50 mm², AWG 1/0 24 Nm, 212 lb.in
	ATV 21WD55N4, WD75N4		150 mm², 300 MCM 41 Nm, 360 lb.in	
	ATV 21WD55N4C, WD75N4C		130 mm², 250 MCM 16 Nm, 142 lb.in	150 mm², 300 MCM 41 Nm, 360 lb.in

Electrical control characteristics

Available internal supplies		Protected against short-circuits and overloads: ■ 1 x 10 V ⎓ supply ± 5% for the reference potentiometer (1 to 10 kΩ), maximum current 10 mA ■ 1 x 24 V ⎓ supply (min. 21 V, max. 27 V), maximum current 50 mA
Analog inputs	VIA	Switch-configurable current or voltage analog input: ■ Voltage analog input 0...10 V ⎓, impedance 30 kΩ (maximum safe voltage 24 V) ■ Current analog input X-Y mA by programming X and Y from 0 to 20 mA, with impedance 242 Ω Maximum sampling time: 2 ms ± 0.5 ms Resolution: 11 bits Accuracy: ± 0.6% for a temperature variation of 60°C Linearity: ± 0.15% of the maximum value This analog input is also configurable as a logic input (see page 37).
	VIB	Voltage analog input, configurable as an analog input or as a PTC probe input. Voltage analog input: ■ ⎓ 0...10 V, impedance 30 kΩ (maximum safe voltage 24 V) ■ Maximum sampling time: 2 ms ± 0.5 ms ■ Resolution: 11 bits ■ Accuracy: ± 0.6% for a temperature variation of 60°C ■ Linearity: ± 0.15% of the maximum value PTC probe input: ■ 6 probes max. mounted in series ■ Nominal value < 1.5 kΩ ■ Trip resistance 3 kΩ, reset value 1.8 kΩ ■ Short-circuit protection < 50 Ω
Analog output	FM	1 switch-configurable voltage or current analog output: ■ Voltage analog output 0...10 V ⎓, minimum load impedance 470 Ω ■ Current analog output X-Y mA by programming X and Y from 0 to 20 mA, maximum load impedance 500 Ω Maximum sampling time: 2 ms ± 0.5 ms Resolution: 10 bits Accuracy: ± 1% for a temperature variation of 60°C Linearity: ± 0.2% of the maximum scale value
Configurable relay outputs	FLA, FLB, FLC	1 x relay logic output, 1 x "N/C" contact and 1 x "N/O" contact with common point Minimum switching capacity: 3 mA for 24 V ⎓ Maximum switching capacity: ■ On resistive load (cos φ = 1) : 5 A for 250 V ∿ or 30 V ⎓ ■ On inductive load (cos φ = 0.4 and L/R = 7 ms): 2 A for 250 V ∿ or 30 V ⎓ Maximum response time: 7 ms ± 0.5 ms Electrical service life: 100,000 operations
	RY, RC	1 x relay logic output, 1 x "N/O" contact Minimum switching capacity : 3 mA for 24 V ⎓ Maximum switching capacity : ■ On resistive load (cos φ = 1) : 5 A for 250 V ∿ or 30 V ⎓ ■ On inductive load (cos φ = 0.4 and L/R = 7 ms) : 2 A for 250 V ∿ or 30 V ⎓ Maximum response time: 7 ms ± 0.5 ms Electrical service life: 100,000 operations
Logic inputs	F, R, RES	3 programmable logic inputs 24 V ⎓, compatible with level 1 PLC, IEC/EN 61131-2 standard Impedance: 3.5 kΩ Maximum voltage: 30 V Maximum sampling time: 2 ms ± 0.5 ms Multiple assignment makes it possible to configure several functions on one input
	Positive logic (Source)	State 0 if ⩽ 5 V or logic input not wired, state 1 if ⩾ 11 V
	Negative logic (Sink)	State 0 if ⩾ 16 V or logic input not wired, state 1 if ⩽ 10 V
Maximum I/O wire size and tightening torque		2.5 mm² (AWG 14) 0.6 Nm

Electrical control characteristics (continued)

Acceleration and deceleration ramps			Ramp profiles: ■ Linear, can be adjusted separately from 0.01 to 3200 s ■ Automatic adaptation of acceleration and deceleration ramp times based on the load
Emergency braking			By DC injection by a command on a programmable logic input. Period adjustable from 0 to 20s or continuous, current adjustable from 0 to In, frequency threshold adjustable from 0 to the maximum frequency.
Main drive protection and safety features			Thermal protection: ■ Against overheating ■ Of the power stage Protection against: ■ Short-circuits between motor phases ■ Input phase breaks ■ Overcurrents between output phases and earth ■ Overvoltages on the DC bus ■ A break on the control circuit ■ Exceeding the limit speed Safety: ■ Line supply overvoltage and undervoltage ■ Input phase loss
Motor protection (see page 69)			Thermal protection integrated in drive via continuous calculation of I^2t taking speed into account: ■ Memorization of the motor thermal state ■ Function can be modified via operator dialogue terminals, depending on the type of motor (force-cooled or self-cooled). Protection against motor phase breaks Protection with PTC probes
Dielectric strength	ATV 21H●●●M3X		Between earth and power terminals: 2830 V ⎓ Between control and power terminals: 4230 V ⎓
	ATV 21●●●●N4 ATV 21W●●●N4C		Between earth and power terminals: 3535 V ⎓ Between control and power terminals: 5092 V ⎓
Earth insulation resistance			> 1 MΩ (electrical isolation) 500 V ⎓ for 1 minute
Frequency resolution	Display units	**Hz**	0.1
	Analog inputs	**Hz**	0.024/50 Hz (11 bits)

Communication port characteristics

Protocol		Modbus
Structure	Connector	1 RJ45 connector
	Physical interface	2-wire RS 485
	Transmission mode	RTU
	Transmission speed	Configurable via the integrated display terminal : 9600 bps or 19,200 bps
	Format	Configurable via the integrated display terminal: - 8 bits, odd parity, 1 stop - 8 bits, even parity, 1 stop - 8 bits, no parity, 1 stop
	Polarization	No polarization impedances These must be provided by the wiring system (for example, in the master)
	Address	1 to 247, configurable via the display terminal
Services	Messaging	Read Holding Registers (03) 2 words maximum Write Single Register (06) Write Multiple Registers (16) 2 words maximum Read Device Identification (43)
	Communication monitoring	Can be inhibited. Time out can be set between 0.1 s and 100 s

Variable speed drives
Altivar 21
Reduction of current harmonics

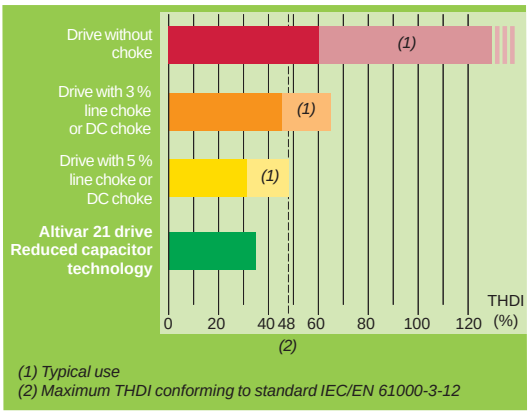

THDI based on the technologies used

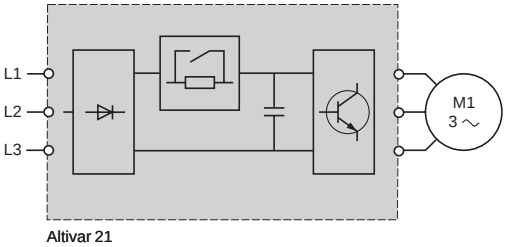

Reduced capacitor technology

Presentation

The traditional solutions for reducing current harmonics are as follows:
- Line chokes
- DC chokes

These solutions typically reduce the THDI *(1)* to a level less than 48% *(2)*. If a choke is not added, the THDI is generally between 60 and 130% (see diagram opposite).

Depending on their type, these external or internal chokes are most often offered as an option and have the following disadvantages:
- Increased cost
- Increased installation time
- Increased overall size
- Increased drive losses with a DC choke

In order to overcome these disadvantages, the Altivar 21 drive integrates new technology: **reduced capacitor technology**.

This integrated technology makes it possible to obtain a THDI *(1)* less than 35% without having to add a choke, offering the following advantages:
- Optimized technology through the reduction of current harmonics by decreasing the filter capacitors
- Greater reduction of current harmonics compared with traditional solutions, line chokes and DC chokes
- Quick setup
- Reduced costs

Example of current harmonic levels for ATV 21H●●●M3X drives *(3)*

Motor power		For ATV 21 drives	Line supply		Current harmonic levels																	THD *(4)*
			Line current	Line Isc	H1	H5	H7	H11	H13	H17	H19	H23	H25	H29	H31	H35	H37	H41	H43	H47	H49	
kW	*HP*		A	kA	A	%	%	%	%	%	%	%	%	%	%	%	%	%	%	%	%	%
Three-phase supply voltage: 230 V 50 Hz																						
0.75	*1*	H075M3X	2.83	5	2.7	17.8	17.9	8.9	9.6	5.8	6.6	4.3	5.1	3.4	4.2	2.8	3.6	2.3	3.2	2	2.9	31.3
1.5	*2*	HU15M3X	5.29	5	5.03	17.7	18.2	8.7	9.8	5.7	6.9	4.1	5.4	3.3	4.5	2.7	4	2.4	3.7	2.3	3.7	31.6
2.2	*3*	HU22M3X	7.56	5	7.2	17.1	18	8.5	9.6	5.5	6.7	4	5.2	3.1	4.3	2.5	3.7	2.1	3.4	2	3.3	30.7
3	–	HU30M3X	10.31	5	9.68	17.6	18.6	8.5	10	5.4	7.3	4	5.9	3.4	5.3	3.9	5.8	9.3	12.2	7.8	1	32.4
4	*5*	HU40M3X	13.45	5	12.73	16.9	18.3	8.2	9.9	5.2	6.9	3.7	5.4	3	4.7	3.2	4.7	7.4	10	6.1	0.8	31.1
5.5	*7.5*	HU55M3X	18.09	22	17.27	17.1	17.8	8.7	9.5	5.7	6.5	4.1	5	3.2	4.1	2.6	3.5	2.2	3.1	1.9	2.8	30.7
7.5	*10*	HU75M3X	24.36	22	23.22	17.1	18	8.6	9.6	5.6	6.7	4.1	5.2	3.2	4.3	2.6	3.7	2.3	3.3	2.1	3.2	30.8
11	*15*	HD11M3X	35.7	22	33.4	18	19	8.6	10	5.6	7.9	4.3	6.9	4.3	7.2	7.1	11.3	11.3	4.3	3.8	0.6	35.5
15	*20*	HD15M3X	47.6	22	44.92	16.9	18.6	8.1	10	5.1	7.5	3.7	6.3	3.3	6.2	5.3	9.9	9.9	3	2.9	0.8	33.3
18.5	*25*	HD18M3X	57.98	22	54.96	16.5	18.4	7.9	10	4.9	7.1	3.4	5.8	2.7	5.5	4	8.9	9	3	2.3	1.4	32
22	*30*	HD22M3X	69.01	22	65.08	16.3	18.8	7.6	10	4.6	7.8	3.2	7.1	3.8	11.2	12.2	4.9	2.7	1.8	1.5	1.3	35
30	*40*	HD30M3X	93.03	22	88.51	16	18.3	7.5	9.9	4.4	6.9	2.9	5.8	2.9	8.3	8.9	4.8	1.9	2.3	1.1	1.6	32.1

(1) Total current harmonic distortion.
(2) Maximum total conforming to standard IEC/EN 61000-3-12.
(3) Example of current harmonic levels up to harmonic order 49 for a 230 V 50 Hz supply with reduced capacitor technology.
(4) Total harmonic distortion conforming to standard IEC/EN 61000-3-12.

Variable speed drives

Altivar 21

Reduction of current harmonics

Example of current harmonic levels for ATV 21H●●●N4 drives *(1)*

Motor power		For ATV 21 drives	Line supply		Current harmonic levels																	THD
			Line current	Line Isc	H1	H5	H7	H11	H13	H17	H19	H23	H25	H29	H31	H35	H37	H41	H43	H47	H49	*(2)*
kW	*HP*		A	kA	A	%	%	%	%	%	%	%	%	%	%	%	%	%	%	%	%	%
Three-phase supply voltage: 400 V 50 Hz																						
0.75	*1*	H075N4	1.64	5	1.55	19.2	18.3	9.4	9.9	6.1	6.8	4.5	5.3	3.6	4.4	3	3.8	2.6	3.4	2.3	3.1	32.8
1.5	*2*	HU15N4	3.03	5	2.89	17.5	17.8	8.8	9.5	5.8	6.5	4.3	5	3.4	4.1	2.8	3.5	2.3	3	2	2.7	30.9
2.2	*3*	HU22N4	4.33	5	4.14	17.2	17.7	8.7	9.4	5.7	6.4	4.2	4.9	3.3	4	2.7	3.3	2.2	2.9	1.9	2.6	30.5
3	–	HU30N4	5.83	5	5.56	17.4	18.1	8.6	9.7	5.6	6.8	4.1	5.3	3.2	4.4	2.6	3.8	2.3	3.5	2.1	3.4	31.2
4	*5*	HU40N4	7.66	5	7.3	17	17.9	8.5	9.6	5.5	6.6	4	5.1	3.1	4.2	2.5	3.6	2.1	3.3	1.9	3.1	30.6
5.5	*7.5*	HU55N4	10.4	22	9.93	17.2	17.6	8.8	9.3	5.8	6.3	4.3	4.8	3.4	3.9	2.8	3.3	2.3	2.8	2	2.5	30.5
7.5	*10*	HU75N4	13.98	22	13.34	17.3	17.9	8.7	9.5	5.7	6.5	4.2	5	3.3	4.1	2.7	3.5	2.3	3.1	2	2.8	30.9
11	*15*	HD11N4	20.13	22	19.23	17	17.7	8.7	9.4	5.7	6.4	4.2	4.9	3.2	4	2.6	3.3	2.2	2.9	1.9	2.6	30.4
15	*20*	HD15N4	27.14	22	25.83	17.1	18.1	8.5	9.7	5.5	6.8	4	5.3	3.1	4.4	2.6	3.9	2.3	3.6	2.4	3.6	30.9
18.5	*25*	HD18N4	33.17	22	31.61	16.8	18	8.4	9.6	5.5	6.7	3.9	5.1	3	4.2	2.5	3.7	2.2	3.4	2.2	3.4	30.5
22	*30*	HD22N4	39.38	22	37.45	16.8	18.1	8.3	9.8	5.3	6.8	3.8	5.3	2.9	4.5	2.5	4.1	2.6	4.2	4.2	5.7	30.7
30	*40*	HD30N4	53.18	22	50.7	16.6	17.9	8.2	9.6	5.2	6.5	3.7	5	2.8	4	2.2	3.5	2.1	3.4	3.3	5.3	30
37	*50*	HD37N4	65.57	22	62.24	16.5	18.1	8.1	9.7	5.1	6.6	3.6	5.1	2.8	4.2	3	4.2	8.5	9.5	4.2	0.9	30.3
45	*60*	HD45N4	79.97	22	76.14	16.3	18.1	8.1	9.7	5.1	6.6	3.6	5.1	2.8	4.3	2.9	4.3	7.5	6.9	3.5	0.5	30.2
55	*75*	HD55N4	99.3	22	94.36	16	18.9	7.8	10	5.2	8.1	5	7.7	8.7	4.8	4	0.2	1.9	0.9	1.2	0.9	32.7
75	*100*	HD75N4	137.3	22	131.07	15.4	18.9	7.5	10	4.9	7.6	4.4	6.7	7.3	3	3.1	0.6	1.5	0.9	0.9	0.8	31.1

Example of current harmonic levels for ATV 21W●●●N4 and W●●●N4C drives *(1)*

Motor power		For ATV 21 drives	Line supply		Current harmonic levels																	THD
			Line current	Line Isc	H1	H5	H7	H11	H13	H17	H19	H23	H25	H29	H31	H35	H37	H41	H43	H47	H49	*(2)*
kW	*HP*		A	kA	A	%	%	%	%	%	%	%	%	%	%	%	%	%	%	%	%	%
Three-phase supply voltage: 400 V 50 Hz																						
0.75	*1*	W075N4 W075N4C	1.64	5	1.55	19.2	18.3	9.4	9.9	6.1	6.8	4.5	5.3	3.6	4.4	3.0	3.8	2.6	3.4	2.3	3.1	32.8
1.5	*2*	WU15N4 WU15N4C	3.03	5	2.89	17.5	17.8	8.8	9.5	5.8	6.5	4.3	5.0	3.4	4.1	2.8	3.5	2.3	3.0	2.0	2.7	30.9
2.2	*3*	WU22N4 WU22N4C	4.33	5	4.14	17.2	17.7	8.7	9.4	5.7	6.4	4.2	4.9	3.3	5.0	2.7	3.3	2.2	2.9	1.9	2.6	30.5
3	–	WU30N4 WU30N4C	5.83	5	5.56	17.4	18.1	8.6	9.7	5.6	6.8	4.1	5.3	3.2	4.4	2.6	3.8	2.3	3.5	2.1	3.4	31.2
4	*5*	WU40N4 WU40N4C	7.66	5	7.30	17.0	17.9	8.5	9.6	5.5	6.6	5.0	5.1	3.1	4.2	2.5	3.6	2.1	3.3	1.9	3.1	30.6
5.5	*7.5*	WU55N4 WU55N4C	10.40	22	9.93	17.2	17.6	8.8	9.3	5.8	6.3	4.3	4.8	3.4	3.9	2.8	3.3	2.3	2.8	2.0	2.5	30.5
7.5	*10*	WU75N4 WU75N4C	13.98	22	13.34	17.3	17.9	8.7	9.5	5.7	6.5	4.2	5.0	3.3	4.1	2.7	3.5	2.3	3.1	2.0	2.8	30.9
11	*15*	WD11N4 WD11N4C	20.17	22	19.23	17.2	18.0	8.6	9.6	5.6	6.7	4.1	5.2	3.2	4.3	2.6	3.7	2.3	3.3	2.1	3.1	30.9
15	*20*	WD15N4 WD15N4C	27.07	22	25.85	16.9	17.8	8.5	9.5	5.6	6.5	5.0	5.0	3.1	4.1	2.5	3.5	2.1	3.1	1.9	2.8	30.4
18.5	*25*	WD18N4 WD18N4C	33.22	22	31.62	16.9	18.0	8.4	9.7	5.4	6.7	3.9	5.2	3.0	4.4	2.5	3.8	2.3	3.6	2.6	3.8	30.7
22	*30*	WD22N4 WD22N4C	39.38	22	37.45	16.8	18.1	8.3	9.8	5.3	6.8	3.8	5.3	2.9	4.5	2.5	4.1	2.6	4.2	4.2	5.7	30.7
30	*40*	WD30N4 WD30N4C	53.18	22	50.70	16.6	17.9	8.2	9.6	5.2	6.5	3.7	5.0	2.8	5.0	2.2	3.5	2.1	3.4	3.3	5.3	30.0
37	*50*	WD37N4 WD37N4C	65.57	22	62.24	16.5	18.1	8.1	9.7	5.1	6.6	3.6	5.1	2.8	4.2	3.0	4.2	8.5	9.5	4.2	0.9	30.3
45	*60*	WD45N4 WD45N4C	79.97	22	76.14	16.3	18.1	8.1	9.7	5.1	6.6	3.6	5.1	2.8	4.3	2.9	4.3	7.5	6.9	3.5	0.5	30.2
55	*75*	WD55N4 WD55N4C	99.30	22	94.36	16.0	18.9	7.8	10.0	5.2	8.1	5.0	7.7	8.7	4.8	5.0	0.2	1.9	0.9	1.2	0.9	32.7
75	*100*	WD75N4 WD75N4C	137.30	22	131.07	15.4	18.9	7.5	10.0	4.9	7.6	4.4	6.7	7.3	3.0	3.1	0.6	1.5	0.9	0.9	0.8	31.1

(1) Example of current harmonic levels up to harmonic order 49 for a 400 V 50 Hz supply with reduced capacitor technology.
(2) Total harmonic distortion conforming to standard IEC/EN 61000-3-12.

Torque characteristics (typical curves)

The curves below define the available continuous torque and transient overtorque for both force-cooled and self-cooled motors. The only difference is in the ability of the motor to provide a high continuous torque at less than half the nominal speed.

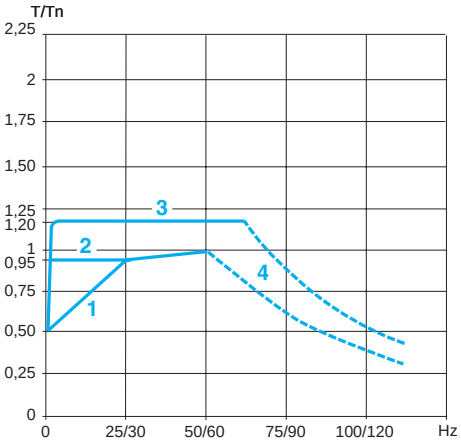

Open loop applications

Open loop applications

1 Self-cooled motor: continuous useful torque *(1)*
2 Force-cooled motor: continuous useful torque
3 Overtorque for 60 seconds maximum
4 Torque in overspeed at constant power *(2)*

Motor thermal protection

Altivar 21 drives feature thermal protection designed specifically for self-cooled or forced-cooled variable speed motors.

This motor thermal protection is designed for a maximum ambient temperature of 40°C around the motor. If the temperature around the motor exceeds 40°C, thermal protection should be provided directly by thermistor probes (PTC) integrated in the motor. The probes are managed directly by the drive.

(1) For power ratings ≤ 250 W, motor derating is 20% instead of 50% at very low frequencies.
(2) The motor nominal frequency and the maximum output frequency can be adjusted from 10 to 200 Hz.
Check the mechanical overspeed characteristics of the selected motor with the manufacturer.

Special uses

Using Altivar 21 drives with synchronous motors

Altivar 21 drives are also suitable for powering synchronous motors (sinusoidal electromotive force) in open loop mode and are used to achieve performance levels comparable to those associated with an asynchronous motor in sensorless flux vector control.
This drive/motor combination makes it possible to obtain remarkable speed accuracy and maximum torque even at zero speed. The design and construction of synchronous motors are such that they offer enhanced power density and high-speed performance in a compact unit. Drive control for synchronous motors does not cause stalling.

Connecting motors in parallel

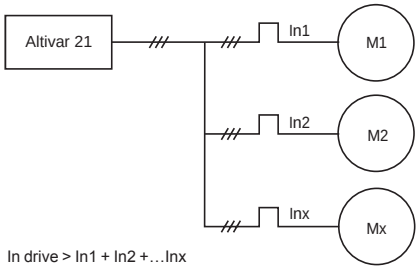

Connecting motors in parallel

One of the following motor control ratios must be used in order to connect motors in parallel:
- Quadratic voltage/frequency ratio
- Constant voltage/frequency ratio
- Constant voltage/frequency ratio with automatic IR compensation

The nominal current of the drive must be greater than or equal to the sum of the currents of the motors to be controlled.
In this case, provide external thermal protection for each motor using probe or thermal overload relays. For cable runs over a certain length, taking account of all the tap links, it is advisable either to install an output filter between the drive and the motors.

If several motors are used in parallel, there are two possible scenarios:
- The motors have equal power ratings, in which case the torque characteristics will remain optimized after the drive has been configured
- The motors have different power ratings, in which case the torque characteristics will not be optimized for all the motors

Switching the motor at the drive output

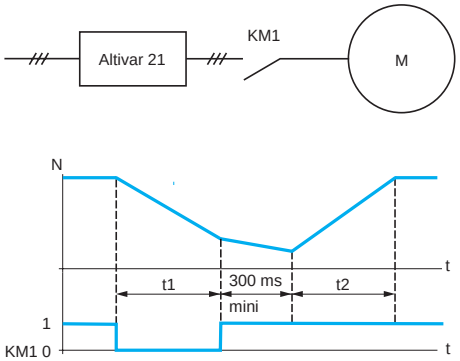

KM1: Output contactor
t1: Deceleration without ramp (freewheel)
t2: Acceleration with ramp
N: Speed

Example of loss of output contactor

The drive can be switched when locked or unlocked. If the drive is switched on-the-fly (drive unlocked), the motor is controlled and accelerates until it reaches the reference speed smoothly following the acceleration ramp. This use requires configuration of the automatic catching a spinning load (“catch on the fly”) and the motor phase loss on output cut functions.

Typical applications:
- Loss of safety circuit at drive output
- Bypass function
- Switching of motors connected in parallel

Test on a low power motor or without a motor

In a testing or maintenance environment the drive can be checked without having to switch to a motor with the same rating as the drive (particularly useful in the case of high power drives). This use requires deactivation of motor phase loss function.

Variable speed drives

Altivar 21

UL Type 1/IP 20 drives

PF106478-16-Q

ATV 21H075M3X

PF106481-25-Q

ATV 21HU75N4

PF106482-33-Q

ATV 21HD75N4

UL Type 1/IP 20 drives without EMC filter

Motor		Line supply				Altivar 21			
Power indicated on rating plate *(1)*		Line current *(2)*		Apparent power	Max. prospective line Isc	Maximum continuous current *(1)*	Max. transient current for 60 s	Reference	Weight
		200 V	240 V	240 V		230 V			
kW	*HP*	A	A	kVA	kA	A	A		kg
Three-phase supply voltage: 200…240 V 50/60 Hz									
0.75	*1*	3.3	2.7	1.1	5	4.6	5.1	**ATV 21H075M3X**	1.800
1.5	*2*	6.1	5.1	2.1	5	7.5	8.3	**ATV 21HU15M3X**	1.800
2.2	*3*	8.7	7.3	3	5	10.6	11.7	**ATV 21HU22M3X**	1.800
3	–	–	10	4.2	5	13.7	15.1	**ATV 21HU30M3X**	3.050
4	*5*	14.6	13	5.4	5	18.7	19.3	**ATV 21HU40M3X**	3.050
5.5	*7.5*	20.8	17.3	7.2	22	24.2	26.6	**ATV 21HU55M3X**	6.100
7.5	*10*	27.9	23.3	9.7	22	32	35.2	**ATV 21HU75M3X**	6.100
11	*15*	42.1	34.4	14.3	22	46.2	50.8	**ATV 21HD11M3X**	11.550
15	*20*	56.1	45.5	18.9	22	61	67.1	**ATV 21HD15M3X**	11.550
18.5	*25*	67.3	55.8	23.2	22	74.8	82.3	**ATV 21HD18M3X**	11.550
22	*30*	80.4	66.4	27.6	22	88	96.8	**ATV 21HD22M3X**	27.400
30	*40*	113.3	89.5	37.2	22	117	128.7	**ATV 21HD30M3X**	38.650

UL Type 1/IP 20 drives with integrated class A EMC filter

Motor		Line supply				Altivar 21			
Power indicated on rating plate *(1)*		Line current *(2)*		Apparent power	Max. prospective line Isc	Maximum continuous current *(1)*	Max. transient current for 60 s	Reference	Weight
		380 V	480 V	380 V		380 V/460 V			
kW	*HP*	A	A	kVA	kA	A	A		kg
Three-phase supply voltage: 380…480 V 50/60 Hz									
0.75	*1*	1.7	1.4	1.1	5	2.2	2.4	**ATV 21H075N4**	2.000
1.5	*2*	3.2	2.5	2.1	5	3.7	4	**ATV 21HU15N4**	2.000
2.2	*3*	4.6	3.6	3	5	5.1	5.6	**ATV 21HU22N4**	2.000
3	–	6.2	4.9	4.1	5	7.2	7.9	**ATV 21HU30N4**	3.350
4	*5*	8.1	6.4	5.3	5	8.2	10	**ATV 21HU40N4**	3.350
5.5	*7.5*	10.9	8.6	7.2	22	12	13.2	**ATV 21HU55N4**	3.350
7.5	*10*	14.7	11.7	9.7	22	16	17.6	**ATV 21HU75N4**	6.450
11	*15*	21.1	16.8	13.9	22	22.5	24.8	**ATV 21HD11N4**	6.450
15	*20*	28.5	22.8	18.7	22	30.5	33.6	**ATV 21HD15N4**	11.650
18.5	*25*	34.8	27.8	22.9	22	37	40.7	**ATV 21HD18N4**	11.650
22	*30*	41.6	33.1	27.3	22	43.5	47.9	**ATV 21HD22N4**	26.400
30	*40*	56.7	44.7	37.3	22	58.5	64.4	**ATV 21HD30N4**	26.400
37	*50*	68.9	54.4	45.3	22	79	86.9	**ATV 21HD37N4**	38.100
45	*60*	83.8	65.9	55.2	22	94	103.4	**ATV 21HD45N4**	38.100
55	*75*	102.7	89	67.6	22	116	127.6	**ATV 21HD55N4**	55.400
75	*100*	141.8	111.3	93.3	22	160	176	**ATV 21HD75N4**	55.400

(1) These values are given for a nominal switching frequency of 12 kHz up to ATV 21HD15M3X and up to ATV 21HD15N4 or 8 kHz for ATV 21HD18M3X…HD30M3X and ATV 21HD18N4…HD75N4 drives, for use in continuous operation.
The switching frequency can be set between 6 and 16 kHz for all ratings.
Above 8 kHz or 12 kHz, depending on the rating, the drive will reduce the switching frequency automatically in the event of an excessive temperature rise. For continuous operation above the nominal switching frequency, derate the nominal drive current (see derating curves on pages 45 to 49).
(2) Typical value for the indicated motor power and for the maximum prospective line Isc.

Variable speed drives

Altivar 21

UL Type 12/IP 54 drives

PF106476-29-Q

ATV 21W075N4

UL Type 12/IP 54 drives with integrated class A EMC filter

Motor		Line supply				Altivar 21			
Power indicated on rating plate *(1)*		Line current *(2)*		Apparent power	Max. prospective line Isc	Maximum continuous current *(1)*	Max. transient current for 60 s	Reference	Weight
		380 V	480 V	380 V		380 V/460 V			
kW	*HP*	A	A	kVA	kA	A	A		kg
Three-phase supply voltage: 380…480 V 50/60 Hz									
0.75	*1*	1.7	1.4	1.1	5	2.2	2.4	**ATV 21W075N4**	7.000
1.5	*2*	3.2	2.5	2.1	5	3.7	4	**ATV 21WU15N4**	7.000
2.2	*3*	4.6	3.6	3	5	5.1	5.6	**ATV 21WU22N4**	7.000
3	–	6.2	4.9	4.1	5	7.2	7.9	**ATV 21WU30N4**	9.650
4	*5*	8.1	6.4	5.3	5	9.1	10	**ATV 21WU40N4**	9.650
5.5	*7.5*	10.9	8.6	7.2	22	12	13.2	**ATV 21WU55N4**	9.650
7.5	*10*	14.7	11.7	9.7	22	16	17.6	**ATV 21WU75N4**	10.950
11	*15*	21.2	16.9	14	22	22.5	24.8	**ATV 21WD11N4**	30.300
15	*20*	28.4	22.6	18.7	22	30.5	33.6	**ATV 21WD15N4**	30.300
18.5	*25*	34.9	27.8	23	22	37	40.7	**ATV 21WD18N4**	37.400
22	*30*	41.6	33.1	27.3	22	43.5	47.9	**ATV 21WD22N4**	49.500
30	*40*	56.7	44.7	37.3	22	58.5	64.4	**ATV 21WD30N4**	49.500
37	*50*	68.9	54.4	45.3	22	79	86.9	**ATV 21WD37N4**	57.400
45	*60*	83.8	65.9	55.2	22	94	103.4	**ATV 21WD45N4**	57.400
55	*75*	102.7	89	67.6	22	116	127.6	**ATV 21WD55N4**	61.900
75	*100*	141.8	111.3	93.3	22	160	176	**ATV 21WD75N4**	61.900

PF106483-33-Q

ATV 21WD18N4C

UL Type 12/IP 54 drives with integrated class B EMC filter

Motor		Line supply				Altivar 21			
Power indicated on rating plate *(1)*		Line current *(2)*		Apparent power	Max. prospective line Isc	Maximum continuous current *(1)*	Max. transient current for 60 s	Reference	Weight
		380 V	480 V	380 V		380 V/460 V			
kW	*HP*	A	A	kVA	kA	A	A		kg
Three-phase supply voltage: 380…480 V 50/60 Hz									
0.75	*1*	1.7	1.4	1.1	5	2.2	2.4	**ATV 21W075N4C**	7.500
1.5	*2*	3.2	2.6	2.1	5	3.7	4	**ATV 21WU15N4C**	7.500
2.2	*3*	4.6	3.7	3	5	5.1	5.6	**ATV 21WU22N4C**	7.500
3	–	6.2	5	4.1	5	7.2	7.9	**ATV 21WU30N4C**	10.550
4	*5*	8.2	6.5	5.4	5	9.1	10	**ATV 21WU40N4C**	10.550
5.5	*7.5*	11	8.7	7.2	22	12	13.2	**ATV 21WU55N4C**	10.550
7.5	*10*	14.7	11.7	9.7	22	16	17.6	**ATV 21WU75N4C**	11.850
11	*15*	21.1	16.7	13.9	22	22.5	24.8	**ATV 21WD11N4C**	36.500
15	*20*	28.4	22.8	18.7	22	30.5	33.6	**ATV 21WD15N4C**	36.500
18.5	*25*	34.5	27.6	22.7	22	37	40.7	**ATV 21WD18N4C**	45.000
22	*30*	41.1	33.1	27.1	22	43.5	47.9	**ATV 21WD22N4C**	58.500
30	*40*	58.2	44.4	38.3	22	58.5	64.4	**ATV 21WD30N4C**	58.500
37	*50*	68.9	54.4	45.3	22	79	86.9	**ATV 21WD37N4C**	77.400
45	*60*	83.8	65.9	55.2	22	94	103.4	**ATV 21WD45N4C**	77.400
55	*75*	102.7	89	67.6	22	116	127.6	**ATV 21WD55N4C**	88.400
75	*100*	141.8	111.3	93.3	22	160	176	**ATV 21WD75N4C**	88.400

(1) These values are given for a nominal switching frequency of 12 kHz up to ATV 21WD15N4 and up to ATV 21WD15N4C or 8 kHz for ATV 21WD18N4…WD75N4 and ATV 21WD18N4C…WD75N4C drives, for use in continuous operation.
The switching frequency can be set between 6 and 16 kHz for all ratings.
Above 8 or 12 kHz, depending on the rating, the drive will reduce the switching frequency automatically in the event of an excessive temperature rise. For continuous operation above the nominal switching frequency, derate the nominal drive current (see derating curves on pages 50 and 51).
(2) Typical value for the indicated motor power and for the maximum prospective line Isc.

Variable speed drives
Altivar 21
Options: accessories, dialogue

DF536067

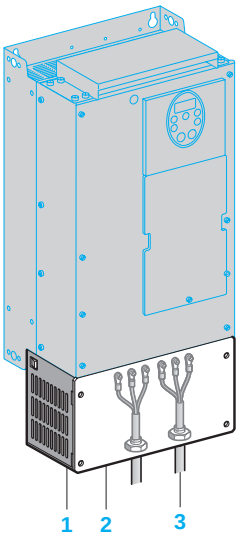

UL Type 1 conformity kit

UL Type 1 conformity kit (for mounting outside the enclosure)

When the drive is mounted directly on a wall outside the enclosure, this kit can be used to ensure UL Type 1 conformity when connecting the cables with a tube.
The shielding is connected inside the kit.
The kit consists of:
- All the mechanical parts **1** including a pre-cut plate **2** for connecting the tubes **3**
- Fixing accessories
- A manual

References

For drives	Reference	Weight kg
ATV 21H075M3X…HU22M3X ATV 21H075N4…HU22N4	**VW3 A31 814**	0.500
ATV 21HU30M3X, HU40M3X ATV 21HU30N4…HU55N4	**VW3 A31 815**	0.500
ATV 21HU55M3X, HU75M3X ATV 21HU75N4, HD11N4	**VW3 A31 816**	0.900
ATV 21HD11M3X…HD18M3X ATV 21HD15N4, HD18N4	**VW3 A31 817**	1.200
ATV 21HD22M3X ATV 21HD22N4, HD30N4	**VW3 A9 206**	4.000
ATV 21HD37N4, HD45N4	**VW3 A9 207**	5.000
ATV 21HD30M3X ATV 21HD55N4, HD75N4	**VW3 A9 208**	7.000

PF600250-24-Q

Vario switch disconnector kit

⊔ rail mounting kit

This kit allows easy installation of ATV 21H075M3X…HU22M3X and ATV 21H075N4…HU22N4 drives by mounting them directly on a 35 mm wide ⊔ rail.

Reference

For drives	Reference	Weight kg
ATV 21H075M3X…HU22M3X ATV 21H075N4…HU22N4	**VW3 A31 852**	0.350

Vario switch disconnector kit

This kit is designed for installing a Vario switch disconnector in the drive, with no need for an additional unit. It meets the requirement for increased safety during maintenance.

Reference

For drives	Reference	Weight kg
ATV 21W075N4…WU55N4	**VW3 A21 801**	0.225

DF536065

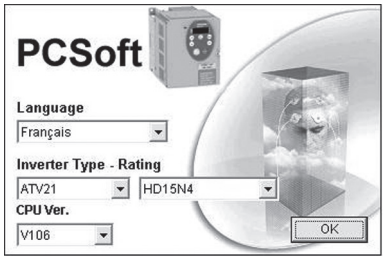

PCSoft software workshop

This PC software workshop is a user-friendly tool for setting up Altivar 21 drives.
It includes different functions such as:
- Configuration preparation
- Setup
- Maintenance

It can be downloaded free of charge from our website www.schneider-electric.com.
It operates in the following PC environments and configurations:
- Microsoft Windows® 98, Microsoft Windows® 2000, Microsoft Windows® XP
- Pentium® 233 MHz or higher, hard disk with 10 MB available, 32 MB RAM
- 256 colour, 640 x 480 pixels or higher definition monitor

Connection

The PCSoft software workshop must be connected directly to the Modbus port on the drive using the PC serial port connection kit.

Note: *It is not possible to use the PCSoft software workshop and a communication option card simultaneously. To be able to use the PCSoft software workshop when the drive is equipped with a communication card, the network or communication bus must be deactivated.*

Reference

Description	Composition	Reference	Weight kg
PC serial port connection kit for point-to-point Modbus connection	■ One 3 m cable with two RJ45 connectors ■ One RS 232/RS 485 converter with one 9-way female SUB-D connector and one RJ45 connector	**VW3 A8 106**	0.350

DF536066

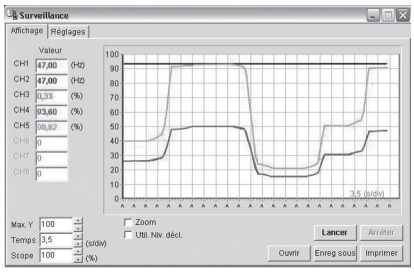

"Monitoring" function in PCSoft software workshop

Dimensions:
page 33

Variable speed drives
Altivar 21
Option: dialogue

DF535006

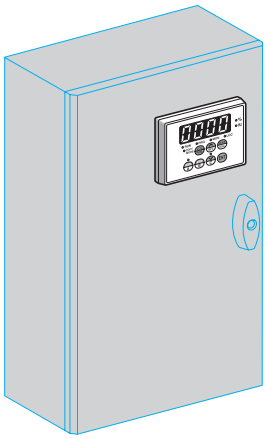

Remote terminal on enclosure door

Remote display terminal

The Altivar 21 drive can be connected to a remote display terminal.
The display terminal can be mounted on the door of an enclosure with IP 50 protection on the front panel. The maximum operating temperature is 40°C.

Two types of operation are available:
■ REMOTE KEYPAD MODE: This accesses the same functions as the integrated Human-Machine interface and can be used:
□ To control, adjust and configure the drive remotely
□ For remote display
■ COPY MODE: This allows configurations to be stored and downloaded (three configuration files can be stored)

Depending on the operating mode selected, the following keys have different functions:
■ ∧/SFT
■ MODE/ESC
■ RUN/A
■ STOP/B
■ ∨/C

***Note:** It is not possible to use the remote display terminal and a communication option card simultaneously. To be able to use the remote display terminal when the drive is equipped with a communication card, the network or communication bus must be deactivated.*

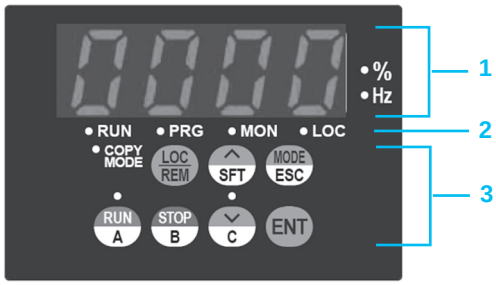

Front panel of the remote display terminal

Description

1 Display:
□ Four 7-segment displays visible at 5 m
□ Display of numeric values and codes
□ The display flashes when a value is stored
□ Unit rating of displayed value
□ The display flashes to indicate a fault on the drive
2 Display of drive status:
□ RUN: Run command is active or speed reference present
□ PRG: Drive in programming mode
□ MON: Drive in monitoring mode
□ LOC: Drive in local mode
□ COPY MODE: COPY MODE selected
3 Use of keys:
□ LOC/REM: Switching of drive control to local or remote.
In "local" control, the speed reference can be modified using the ∧ and ∨ keys; the LED located between these keys lights up.
□ ∧ /SFT, depending on the operating mode selected:
- Vertical navigation in the menu or editing of values
- Access to functions for managing parameters (copy, comparison, protection) or to display terminal memories
□ MODE/ESC, depending on the operating mode selected:
- To adjust and program drive parameters, access to monitoring mode
- To abort a value or parameter to return to the previous state
□ RUN/A, depending on the operating mode selected:
- Local motor run command; LED indicates that the RUN key is active
- Copy terminal memory "A"
□ STOP/B, depending on the operating mode selected:
- Local motor stop command, drive fault reset
- Copy terminal memory "B"
□ ∨/C, depending on the operating mode selected:
- Vertical navigation in the menu or editing of values
- Copy terminal memory "C"
□ ENT: Saves the current value or the selected function

Reference

Designation	Reference	Weight kg
Remote display terminal Supplied with: ■ 1 preassembled cordset with 2 RJ45 connectors, 3 metres long ■ Seal and screws for IP 50 mounting on enclosure door	**VW3 A21 101**	0.250

Dimensions:
page 33

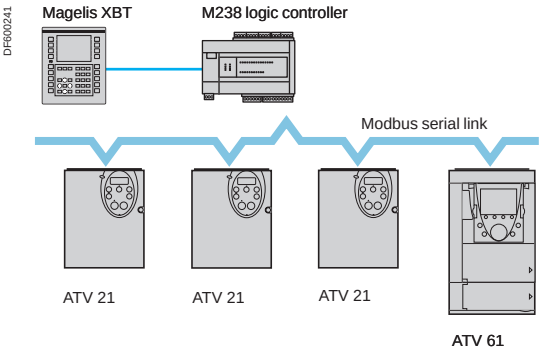

Example of configuration on Modbus serial link

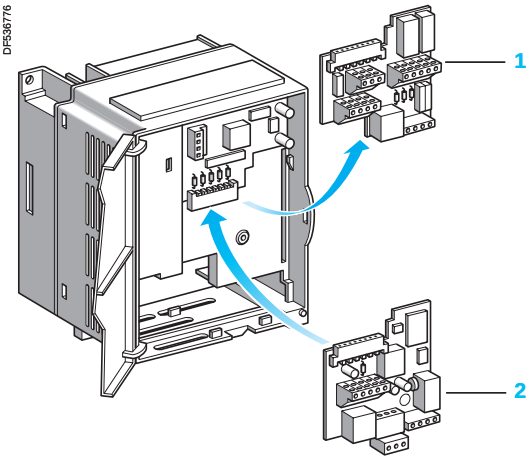

Presentation

The Altivar 21 drive is designed to suit the configurations found in communicating installations created for buildings.

It includes the Modbus communication protocol as standard.

The RJ45 Modbus port is located on the drive's control terminals. It is assigned to control and signalling by a PLC or by another type of controller.
It is also used to connect:
- The remote terminal
- A Magelis industrial HMI terminal

By substituting the I/O terminals **1** with one of the 4 communication cards **2** available as an option, the Altivar 21 drive can also be connected to other networks and communication buses in operation in the building (HVAC) *(2)*.
Each communication card contains I/O terminals.

Communication cards for building applications (HVAC):
- LonWorks
- METASYS N2
- APOGEE FLN
- BACnet

Note: *Connection to a network or communication bus via one of the four communication cards is incompatible with use of the PCSoft software workshop or the remote display terminal. To be able to use the PCSoft software workshop or the remote display terminal, the network or communication bus must be deactivated. See pages 20 and 21.*

(1) Modbus communication protocol characteristics (see page 13)
(2) Heating, Ventilation and Air Conditioning

Variable speed drives
Altivar 21
Communication buses and networks

Functions

All the drive functions can be accessed via the network:
- Control
- Monitoring
- Adjustment
- Configuration

The speed control and reference may come from different control sources:
- I/O terminals
- Communication network
- Remote display terminal

The advanced functions of the Altivar 21 enable the switching of these drive control sources to be managed in accordance with application requirements.

Communication is monitored according to criteria specific to each protocol.
The response of the drive in the event of a communication fault can be configured.
- Freewheel stop, stop on ramp or braked stop
- Maintain last command received
- Ignore the fault

Presentation:
page 22

Characteristics:
page 13

References:
page 25

Characteristics of the LonWorks card VW3 A21 312

Structure	Connector	1 removable 3-way screw terminal block
	Topology	TP/FT-10 (free topology)
	Transmission speed	78 Kbps
Services	Functional profiles	LonMark 6010: Variable Speed Motor Drive LonMark 0000: Node Object
Diagnostics	Via LEDs	1 LED on the card: Service
	Using the graphic display terminal	Control word received Reference received
Description file		An xif file is supplied on the documentation CD-ROM or can be downloaded from our website "www.schneider-electric.com".

Characteristics of the METASYS N2 card VW3 A21 313

Structure	Connector	1 removable 4-way screw terminal block
	Transmission speed	9.6 Kbps
	Address	1 to 255, configurable via the integrated graphic display terminal
Services	Messaging	Read/Write a collection of N2 points Access to the complete parameter set
	METASYS N2 supported objects	Binary inputs, binary outputs, analog inputs and analog outputs, (BI, BO, AI, AO)
Diagnostics	Via LEDs	2 LEDs on the card: "COM" (network traffic) and "ERR" (fault)
	Using the graphic display terminal	Valid and incorrect frame counter

Characteristics of the APOGEE FLN card VW3 A21 314

Structure	Connector	1 removable 4-way screw terminal block
	Transmission speed	4.8 kbps to 76.8 kbps
	Address	1 to 99, configurable via the integrated 7-segment graphic display terminal
Services	Messaging	Read/Write a collection of points Access to the complete parameter set
	APOGEE FLN supported objects	Logical analog inputs (LAI), Logical analog outputs (LAO), Logical digital inputs (LDI), Logical digital outputs (LDO)
Diagnostics	Via LEDs	2 LEDs on the card: "COM" (network traffic) and "ERR" (fault)
	Using the graphic display terminal	Valid and incorrect frame counter

Characteristics of the BACnet card VW3 A21 315

Structure	Connector	1 removable 4-way screw terminal block
	Transmission speed	9.6 kbps to 76.8 kbps
	Address	1 to 127, configurable via the integrated 7-segment graphic display terminal
Services	Communication profile	BACnet B-ASC standardized profile
	Messaging	Read/Write the drive object properties (simple or multiple access) Access to the complete parameter set
	BACnet supported objects	Binary inputs, binary outputs, analog inputs, analog outputs, binary values and analog values (BI, BO, AI, AO)
Diagnostics	Via LEDs	2 LEDs on the card: "COM" (network traffic) and "ERR" (fault)
	Using the graphic display terminal	Valid and incorrect frame counter

Presentation: page 22
Functions: page 23
References: page 25

Variable speed drives
Altivar 21
Communication buses and networks

PF105553

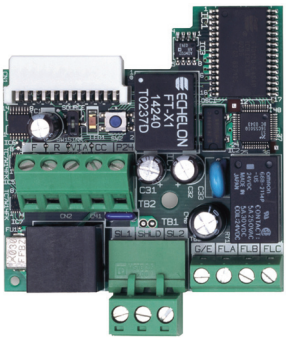

VW3 A21 312

DF60024

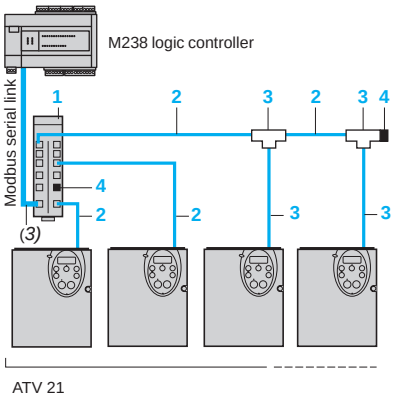

Example of Modbus diagram, connections via splitter box with RJ45 connectors

Communication cards *(1) (2)*

Designation	Use	Reference	Weight kg
LonWorks	Card equipped with a removable 3-way screw terminal block	**VW3 A21 312**	0.200
METASYS N2	Card equipped with a removable 4-way screw terminal block	**VW3 A21 313**	0.200
APOGEE FLN	Card equipped with a removable 4-way screw terminal block	**VW3 A21 314**	0.200
BACnet	Card equipped with a removable 4-way screw terminal block	**VW3 A21 315**	0.200

Connection accessories

Description	Ref.	Length m	Unit reference	Weight kg
Modbus serial link				
Modbus splitter box 10 RJ45 connectors and 1 screw terminal block	1	–	**LU9 GC3**	0.500
Cordsets for Modbus serial link with 2 RJ45 connectors	2	0.3	**VW3 A8 306 R03**	0.025
		1	**VW3 A8 306 R10**	0.060
		3	**VW3 A8 306 R30**	0.130
Modbus T-junction boxes (with integrated cable)	3	0.3	**VW3 A8 306 TF03**	0.190
		1	**VW3 A8 306 TF10**	0.210
Line terminator For RJ45 connector *(4)*	4	–	**VW3 A8 306 RC**	0.010

(1) The Altivar 21 drive can only take one communication card.
(2) The user manuals are supplied on CD-ROM or can be downloaded from our website "www.schneider-electric.com". The description file for the LonWorks communication card is also supplied on CD-ROM in xif format or can be downloaded from our website "www.schneider-electric.com".
(3) Cable dependent on the type of controller or PLC.
(4) Sold in lots of 2.

Presentation: page 22
Functions: page 23
Characteristics: page 24

Variable speed drives

Altivar 21: EMC filters

Optional integrated filters and additional filters

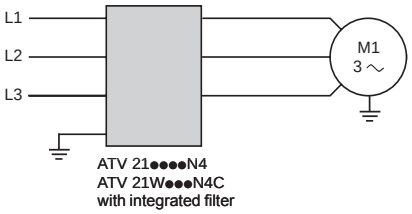

Integrated EMC filters

Altivar 21 drives, except for the ATV 21H●●●M3X, have built-in radio interference input filters to meet the requirements of the EMC standard for variable speed electrical power drive "products" IEC/EN 61800-3, edition 2, categories C1, C2 or C3 in environment 1 or 2 and to comply with the European directive on EMC (electromagnetic compatibility).

Drives	Maximum length of shielded cable *(1)* according to		Leakage current *(2)*
	EN 55011 class A Gr1 *(3)*	EN 55011 class B Gr1 *(3)*	
	IEC/EN 61800-3 *(3)*	IEC/EN 61800-3 *(3)*	
	m	m	mA
UL Type 1/IP 20 drives			
ATV 21H075N4…HU22N4	20	–	4.5
ATV 21HU30N4…HU55N4	5	–	5.8
ATV 21HU75N4, HD11N4	5	–	2.9
ATV 21HD15N4, HD18N4	5	–	4.8
ATV 21HD22N4, HD30N4	5	–	25.3
ATV 21HD37N4, HD45N4	20	–	21.5
ATV 21HD55N4, HD75N4	100	–	9.1
UL Type 12/IP 54 drives			
ATV 21W075N4…WU22N4	5	–	4.5
ATV 21WU30N4…WU55N4	5	–	5.8
ATV 21WU75N4	5	–	2.9
ATV 21WD11N4, WD15N4	5	–	13.3
ATV 21WD18N4	5	–	9.4
ATV 21WD22N4, WD30N4	5	–	25.3
ATV 21WD37N4, WD45N4	20	–	21.5
ATV 21WD55N4, WD75N4	100	–	9.1
ATV 21W075N4C…WU22N4C	–	20	18,4
ATV 21WU30N4C…WU55N4C	–	20	42.8
ATV 21WU75N4C	–	20	37.2
ATV 21WD11N4C, WD15N4C	–	20	81
ATV 21WD18N4C	–	20	77.2
ATV 21WD22N4C, WD30N4C	–	20	84.5
ATV 21WD37N4C, WD45N4C	–	20	53.6
ATV 21WD55N4C, WD75N4C	–	20	56.9

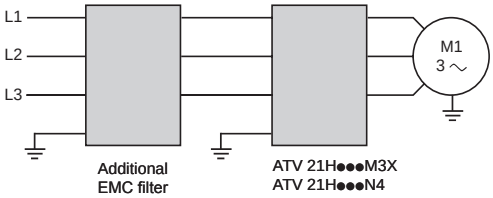

Additional EMC input filters

Applications

Additional EMC input filters can be used to meet more stringent requirements and are designed to cut down conducted emissions on the line supply below the limits of standards EN 55011 group 1, class A or B and IEC/EN 61800-3 category C1, C2 or C3 (see page 8).
The additional EMC filters can be mounted beside or under the device. They act as a support for the drives and are attached to them via tapped holes.

Use according to the type of line supply

Use of these additional filters is only possible on TN (neutral connection) and TT (neutral to earth) type networks.

Standard IEC/EN 61800-3, appendix D2.1, states that on IT networks (isolated or impedance earthed neutral), filters can cause permanent insulation monitors to operate in a random manner.
In addition, the effectiveness of additional filters on this type of network depends on the type of impedance between neutral and earth, and therefore cannot be predicted.
In the case of a machine which needs to be installed on an IT network, the solution would be to insert an isolation transformer and place the machine locally on a TN or TT network.

(1) Maximum lengths for shielded cables connecting motors to drives for a switching frequency of 6 to 16 kHz. If motors are connected in parallel, it is the total length that should be taken into account.
(2) Maximum earth leakage current at 480 V 60 Hz on a TT network.
(3) See page 8.

Variable speed drives

Altivar 21: EMC filters

Option: additional input filters

General characteristics

EMC filter type			VW3 A31 404, 406…409	VW3 A4 406…408
Conformity to standards			EN 133200	
Degree of protection			IP 20 and IP 41 on upper part	
Maximum relative humidity			93% without condensation or dripping water conforming to IEC 68-2-3	
Ambient air temperature around the unit	Operation	°C	-10…+60	-10…+50
	Storage	°C	-25…+70	-40…+65
Maximum operating altitude		m	1000 without derating. 1000…3000 derating the current by 1% per additional 100 m. Limited to 2000 m for the "Corner Grounded" distribution network.	
Vibration resistance			1.5 mm peak to peak from 3…13 Hz, 1 gn peak from 13…150 Hz, in accordance with IEC 60068-2-6	
Shock resistance			15 gn for 11 ms conforming to IEC/EN 60068-2-27	
Maximum nominal voltage	50/60 Hz three-phase	V	240 +10% 480 +10%	

Connection characteristics

Maximum wire size and tightening torque	VW3 A31 404, 406		10 mm² (AWG 6) 1.8 Nm
	VW3 A31 407…409		25 mm² (AWG 2) 4.5 Nm
	VW3 A4 406, 407		50 mm² (AWG 0) 6 Nm
	VW3 A4 408		150 mm² (300 kcmil) 25 Nm

References

105587-32-Q

VW3 A31 406

For drives	Maximum length of shielded cable *(1)* according to EN 55011 class A Gr1 *(5)* IEC/EN 61800-3 *(5)*	Maximum length of shielded cable *(1)* according to EN 55011 class B Gr1 *(5)* IEC/EN 61800-3 *(5)*	In *(2)*	Il *(3)*	Loss *(4)*	Reference	Weight
	m	m	A	mA	W		kg
Three-phase supply voltage: 200…240 V 50/60 Hz							
ATV 21H075M3X	20	20	15	6.7	0.47	**VW3 A31 404**	1.000
ATV 21HU15M3X	20	20	15	6.7	1.6	**VW3 A31 404**	1.000
ATV 21HU22M3X	20	20	15	6.7	3.3	**VW3 A31 404**	1.000
ATV 21HU30M3X	20	20	25	17.8	3.6	**VW3 A31 406**	1.650
ATV 21HU40M3X	20	20	25	17.8	6.2	**VW3 A31 406**	1.650
ATV 21HU55M3X	20	–	47	20.6	3.7	**VW3 A31 407**	3.150
ATV 21HU75M3X	20	–	47	20.6	6.8	**VW3 A31 407**	3.150
ATV 21HD11M3X	20	–	83	14.5	9.1	**VW3 A31 408**	5.300
ATV 21HD15M3X	20	–	83	14.5	16	**VW3 A31 408**	5.300
ATV 21HD18M3X	20	–	83	14.5	23.1	**VW3 A31 408**	5.300
ATV 21HD22M3X	100	–	90	40.6	27.1	**VW3 A4 406**	16.000
ATV 21HD30M3X	20	–	180	86.3	23.1	**VW3 A4 408**	40.000
Three-phase supply voltage: 380…480 V 50/60 Hz							
ATV 21H075N4	20	20	15	13.8	0.13	**VW3 A31 404**	1.000
ATV 21HU15N4	20	20	15	13.8	0.45	**VW3 A31 404**	1.000
ATV 21HU22N4	20	20	25	13.8	0.9	**VW3 A31 404**	1.000
ATV 21HU30N4	20	20	25	37	1	**VW3 A31 406**	1.650
ATV 21HU40N4	20	20	25	37	1.6	**VW3 A31 406**	1.650
ATV 21HU55N4	20	20	25	37	3	**VW3 A31 406**	1.650
ATV 21HU75N4	20	20	47	42.8	1.9	**VW3 A31 407**	3.150
ATV 21HD11N4	20	20	47	42.8	3.9	**VW3 A31 407**	3.150
ATV 21HD15N4	20	20	49	42.8	9.2	**VW3 A31 409**	4.750
ATV 21HD18N4	20	20	49	42.8	13.8	**VW3 A31 409**	4.750
ATV 21HD22N4	100	–	90	84.5	7.3	**VW3 A4 406**	16.000
ATV 21HD30N4	100	–	90	84.5	13.5	**VW3 A4 406**	16.000
ATV 21HD37N4	100	100	92	106	16	**VW3 A4 407**	17.000
ATV 21HD45N4	100	100	92	106	23	**VW3 A4 407**	17.000
ATV 21HD55N4	100	100	180	193	18	**VW3 A4 408**	40.000
ATV 21HD75N4	100	100	180	193	34	**VW3 A4 408**	40.000

(1) The filter selection tables give the maximum lengths for shielded cables connecting motors to drives for a switching frequency of 6 to 16 kHz. These limits are given as examples only as they vary depending on the stray capacitance of the motors and the cables used. If motors are connected in parallel, it is the total length that should be taken into account.
(2) Filter nominal current.
(3) Maximum earth leakage current at 230 V and at 480 V 60 Hz on a TT network.
(4) Via thermal dissipation.
(5) See page 8.

Presentation: page 26
Dimensions: page 33
Schemes: page 37

Variable speed drives
Altivar 21: output filters
Option: motor chokes

Motor chokes

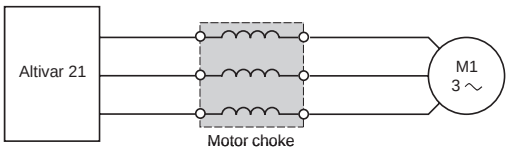

The motor choke enables operation with motor cables of the following maximum lengths:

For drives	Maximum motor cable length *(1)*	
	Shielded cable	Unshielded cable
	m	m
ATV 21H075M3X…HD15M3X ATV 21H075N4…HD15N4 ATV 21W075N4…WD15N4 ATV 21W075N4C…WD15N4C	100	150
ATV 21HD18M3X…HD30M3X ATV 21HD18N4…HD75N4 ATV 21WD18N4…WD75N4 ATV 21WD18N4C…WD75N4C	150	300

It is also used to:
- Limit overvoltages on the motor terminals
- Filter interference caused by opening a contactor placed between the filter and the motor
- Reduce the motor earth leakage current

General characteristics *(2)*

Type of choke			VW3 A5 103	VW3 A5 104
Maximum drive switching frequency		**kHz**	6	
Maximum drive output frequency		**Hz**	200	
Degree of protection			IP 00	IP 00 IP 20 with kit VW3 A9 612
Thermal protection			By temperature-controlled switch	–
Temperature-controlled switch *(3)*	Tripping temperature	**°C**	125	–
	Maximum voltage	**V**	250 ∿	–
	Maximum current	**A**	0.5	–
Ambient air temperature around the device	Operation	**°C**	-10…+50	
	Storage	**°C**	-25…+70	

Connection characteristics

Maximum wire size and tightening torque	VW3 A5 103		Connected on a bar, Ø 9 mm –	
	VW3 A5 104		Connected on a tag connector, M10 –	

(1) These values are given for a nominal switching frequency of 6 kHz.
(2) Choke performance is ensured by not exceeding the above cable lengths. For an application with several motors connected in parallel, the cable length must include all cabling. If a cable longer than that recommended is used, the motor chokes may overheat.
(3) The switch should be connected in the sequence (use for signalling or in line contactor control).

Variable speed drives

Altivar 21: output filters

Option: motor chokes

PF600243

VW3 A5 103

Motor chokes

For drives	Maximum length of motor cable *(1)* Shielded	Unshielded	Losses	Nominal current	Sold in lots of	Unit reference	Weight
	m	m	W	A			kg
Three-phase supply voltage: 200…240 V 50/60 Hz							
ATV 21H075M3X…HD11M3X	100	150	350	90	–	**VW3 A5 103**	10.000
ATV 21HD15M3X	100	150	430	215	3	**VW3 A5 104**	15.500
ATV 21HD18M3X…HD30M3X	150	300	430	215	3	**VW3 A5 104**	15.500
Three-phase supply voltage: 380...480 V 50/60 Hz							
ATV 21H075N4…HD11N4 ATV 21W075N4…HD11N4 ATV 21W075N4C…HD11N4C	100	150	350	90	–	**VW3 A5 103**	10.000
ATV 21HD15N4 ATV 21WD15N4 ATV 21WD15N4C	100	150	430	215	3	**VW3 A5 104**	15.500
ATV 21HD18N4, HD75N4 ATV 21WD18N4, WD75N4 ATV 21WD18N4C, WD75N4C	150	300	430	215	3	**VW3 A5 104**	15.500

IP 20 protection kit

Description	For motor choke	Reference	Weight kg
Mechanical kit including an IP 20 cover and cable clips	VW3 A5 104	**VW3 A9 612**	–

(1) Maximum length given for a switching frequency of 6 kHz depending on the drive rating (see characteristics on page 28).

ATV 21H075M3X…HU40M3X, ATV 21H075N4…HU55N4

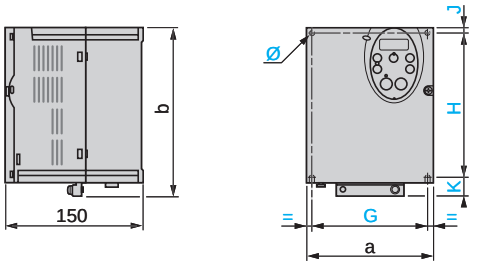

EMC mounting plate (supplied with the drive)

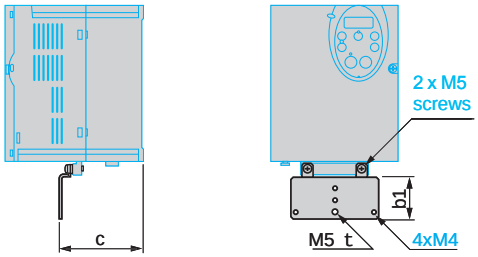

ATV 21H	a	b	b1	c	G	H	J	K	Ø
075M3X…U22M3X 075N4…U22N4	107	143	49	67.3	93	121.5	5	16.5	2xØ5
U30M3X, U40M3X U30N4…U55N4	142	184	48	88.8	126	157	6.5	20.5	4xØ5

ATV 21HU55M3X, HU75M3X, ATV 21HU75N4, HD11N4

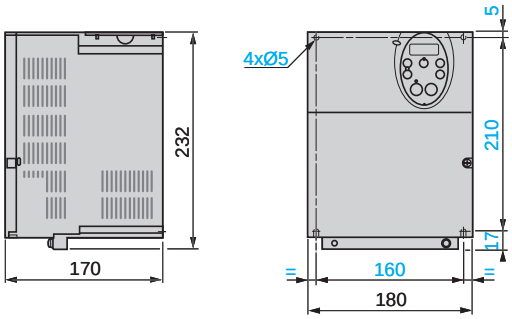

EMC mounting plate (supplied with the drive)

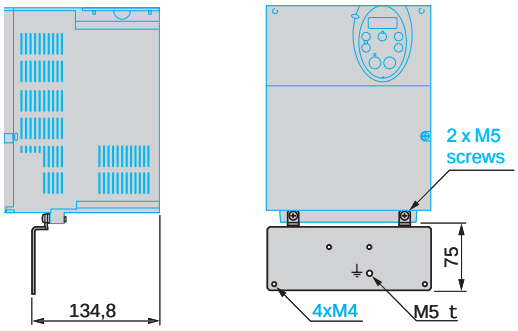

ATV 21HD11M3X…HD18M3X, ATV 21HD15N4, HD18N4

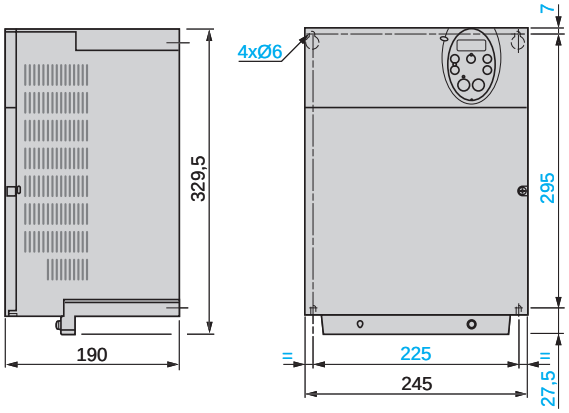

EMC mounting plate (supplied with the drive)

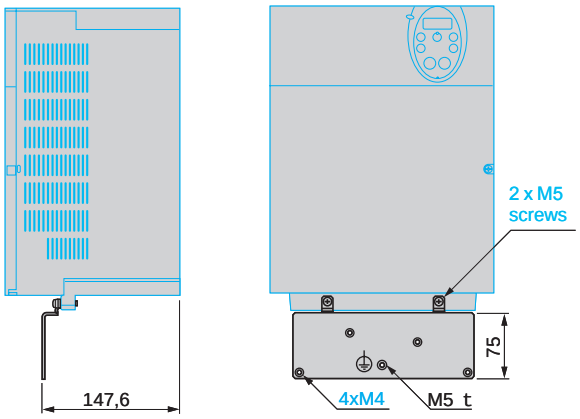

ATV 21HD22M3X, ATV 21HD22N4...HD45N4

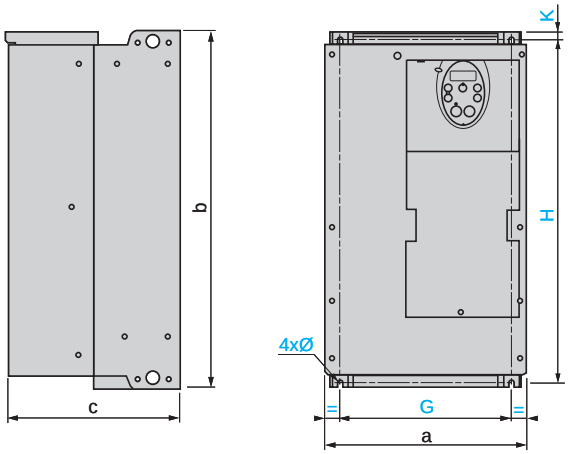

EMC mounting plate (supplied with the drive)

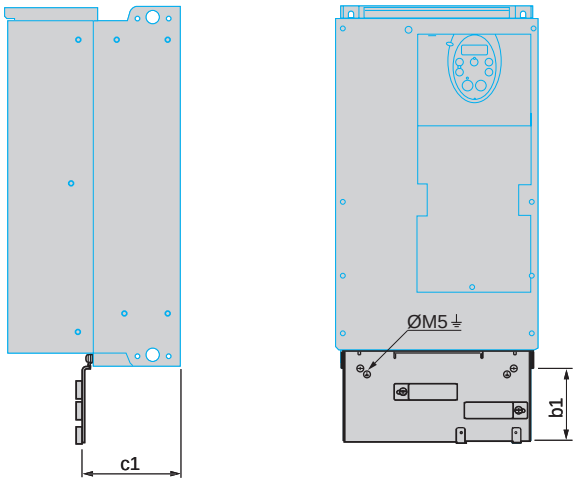

ATV 21H	a	b	b1	c	c1	G	H	K	Ø
D22M3X D22N4, D30N4	240	420	122	214	120	206	403	10	6
D37N4, D45N4	240	550	113	244	127	206	529	10	6

ATV 21HD30M3X, ATV 21HD55N4, HD75N4

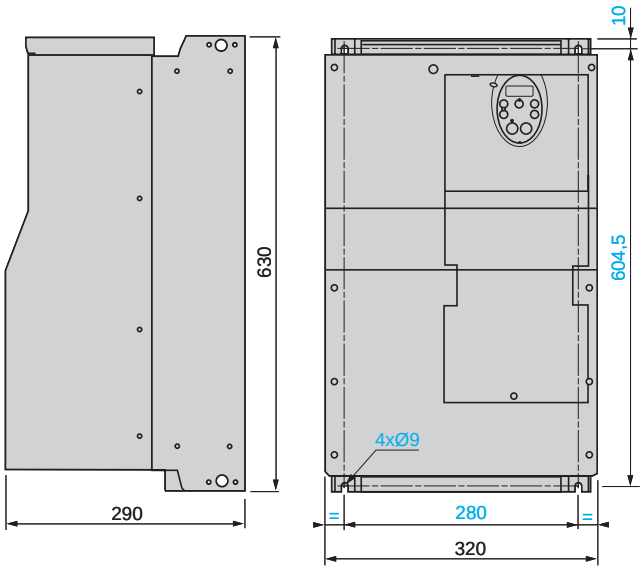

EMC mounting plate (supplied with the drive)

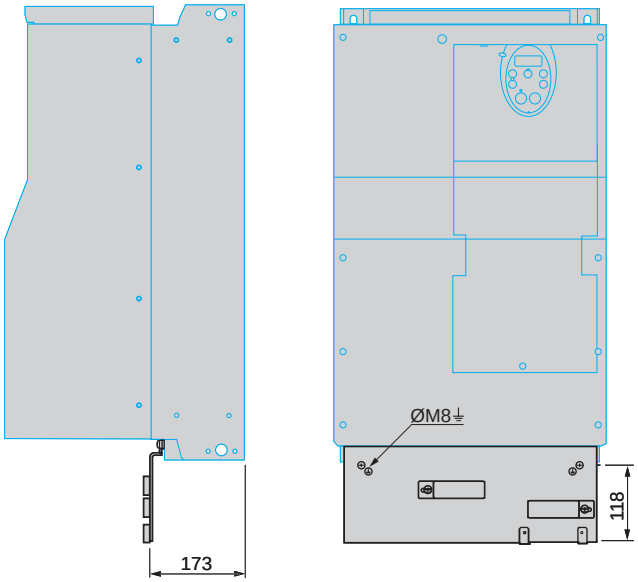

ATV 21W075N4…WU75N4, ATV 21W075N4C…WU75N4C

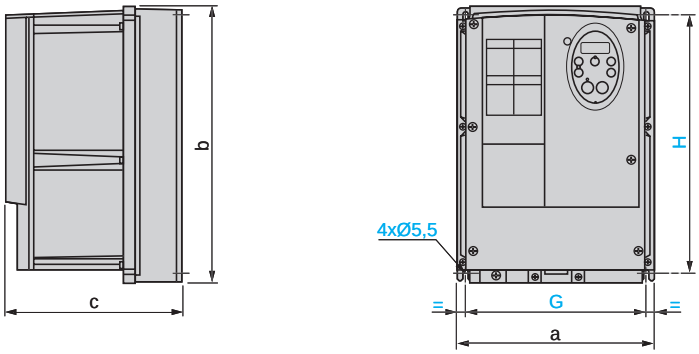

ATV 21W	a	b	c	G	H
075N4…U22N4 075N4C…U22N4C	215	297	192	197	277
U30N4…U75N4 U30N4C…U75N4C	230	340	208	212	318

ATV 21WD11N4…WD75N4, ATV 21WD11N4C…WD75N4C

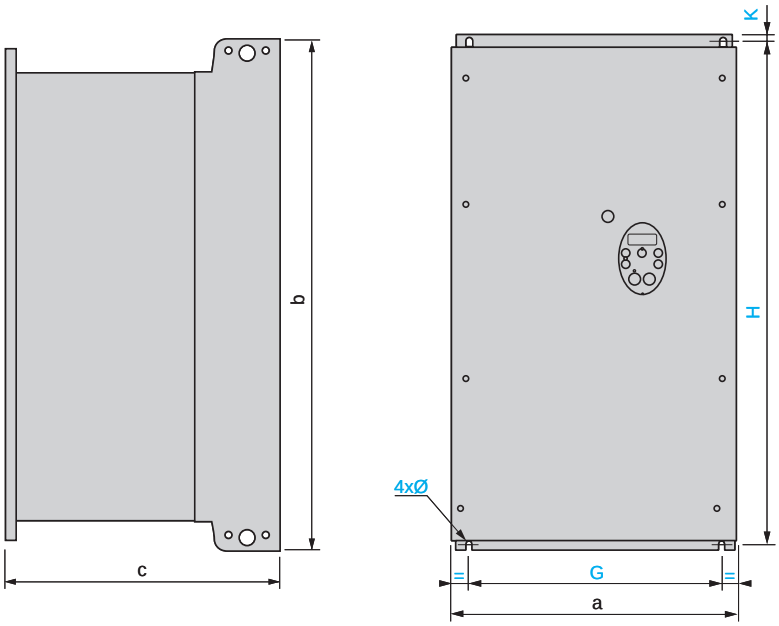

ATV 21W	a	b	c	G	H	K	Ø
D11N4, D15N4 D11N4C, D15N4C	290	560	315	250	544	8	6
D18N4 D18N4C	310	665	315	270	650	10	6
D22N4, D30N4 D22N4C, D30N4C	284	720	315	245	700	10	7
D37N4, D45N4 D37N4C, D45N4C	284	880	343	245	860	10	7
D55N4, D75N4 D55N4C, D75N4C	362	1000	364	300	975	10	9

UL Type 1 conformity kits

VW3 A31 814...817

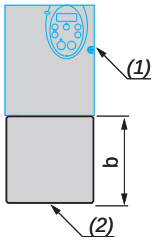

VW3	b
A31 814, 815	68
A31 816	96
A31 817	99

(1) Drive
(2) Kit

VW3 A9 206...208

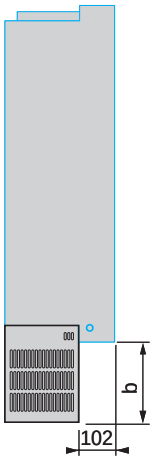

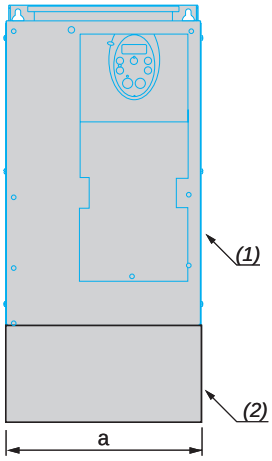

VW3	a	b
A9 206	240	59.9
A9 207	240	51.5
A9 208	320	136

(1) Drive
(2) Kit

Kit for mounting on ⊔ rail

VW3 A31 852

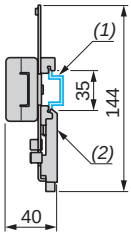

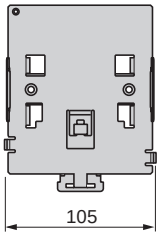

(1) ⊔ rail
(2) Kit

Remote display terminal

VW3 A21 101

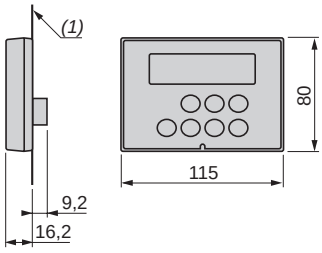

(1) Enclosure door

Cut-outs and drill holes

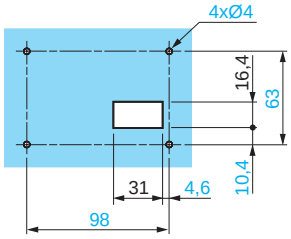

Variable speed drives

Altivar 21

Additional EMC input filters

VW3 A31 404, 406...409

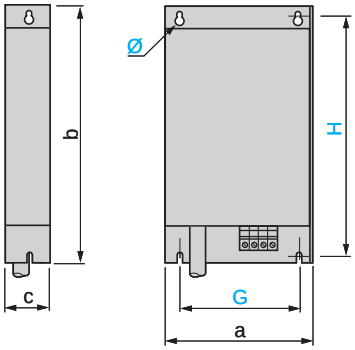

VW3 A4 406...408

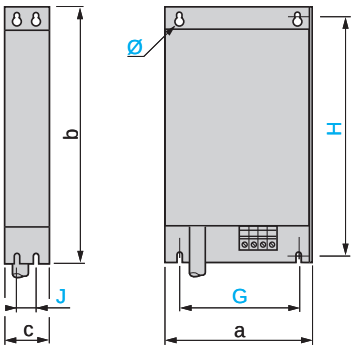

VW3	a	b	c	G	H	J	Ø
A31 404	107	195	42	85	180	–	4.5
A31 406	140	235	50	120	215	–	4.5
A31 407	180	305	60	140	285	–	5.5
A31 408	245	395	80	205	375	–	5.5
A31 409	245	395	60	205	375	–	5.5
A4 406	240	522	79	200	502.5	40	9
A4 407	240	650	79	200	631	40	9
A4 408	320	750	119	280	725	80	9

Mounting the filter under the drive

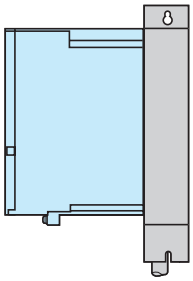

Front view

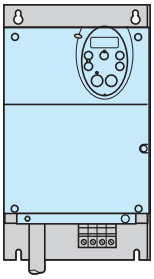

Mounting the filter next to the drive

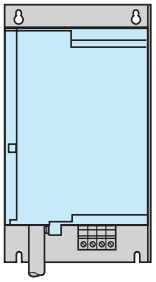

Front view

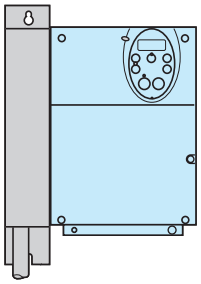

Front view

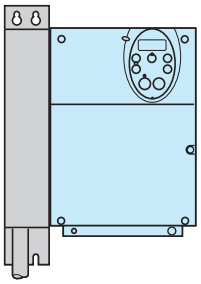

Motor chokes *(1)*

VW3 A5 103

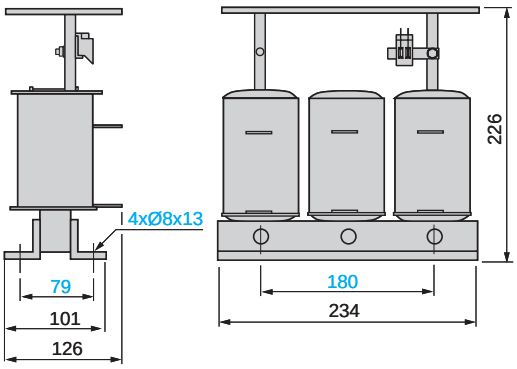

Mounting recommendations *(3)*

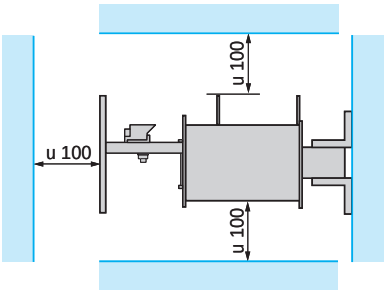

VW3 A5 104 *(2)*

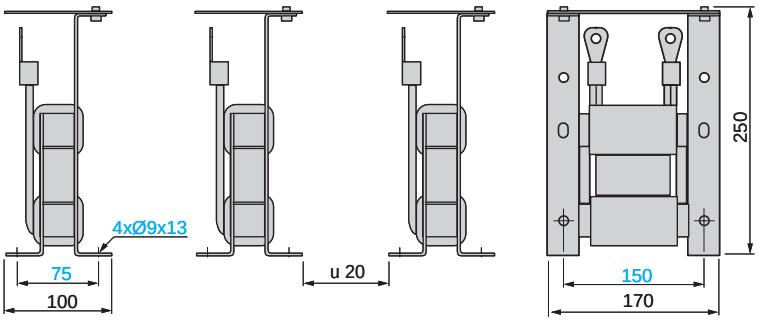

Mounting recommendations *(3)*

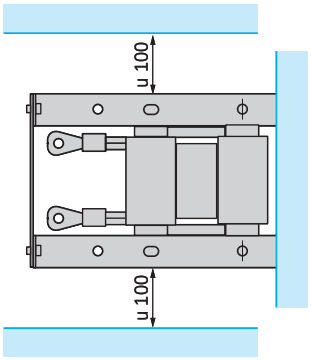

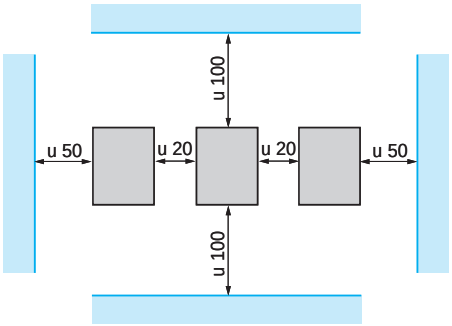

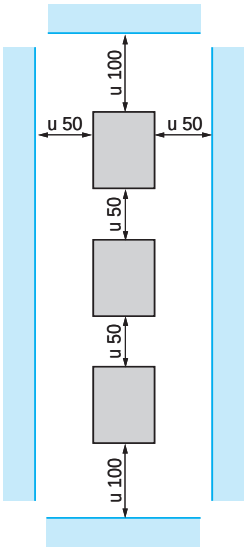

(1) It is absolutely essential that the motor chokes are mounted on a metal support (grille, frame, etc.).
(2) Choke VW3 A5 104 comprises 3 components.
(3) Because of the magnetic field and/or the heat dissipation, it is essential to follow the mounting recommendations provided.

Recommended diagram for ATV 21H●●●M3X, ATV 21●●●●N4, ATV 21W●●●N4C

Three-phase power supply

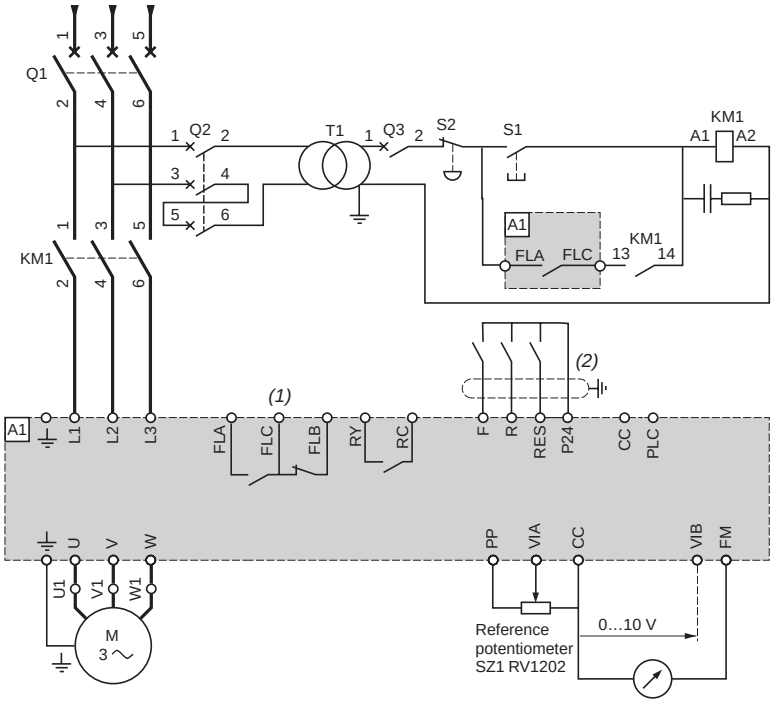

Switches (factory settings)

Voltage/current selection for analog I/O (FM and VIA)

Selection of logic type

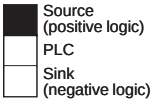

Note: *All terminals are located at the bottom of the drive. Install interference suppressors on all inductive circuits near the drive or connected on the same circuit, such as relays, contactors, solenoid valves, fluorescent lighting, etc.*

Compatible components (for a complete list of references, please refer to the "Motor starter solutions - Control and protection components" catalogue)

Ref.	Description
A1	ATV 21 drive (see pages 18 and 19)
KM1	Contactor (see pages 40 to 43)
Q1	Circuit-breaker (see pages 40 to 43)
Q2	GV2 L rated at twice the nominal primary current of T1
Q3	GB2 CB05
S1, S2	XB4 B or XB5 A pushbuttons
T1	100 VA transformer 220 V secondary

(1) Fault relay contacts. Used for remote signalling of the drive status.
(2) Connection of the common for the logic inputs depends on the position of the switch (Source, PLC, Sink); see page 37.

Examples of recommended diagrams

Logic inputs according to the position of the logic type switch

"Source" position

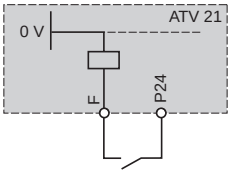

"Sink" position

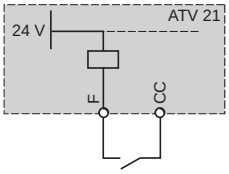

PLC position with PLC transistor outputs

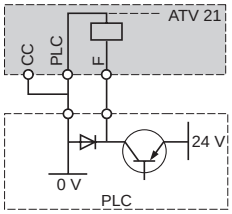

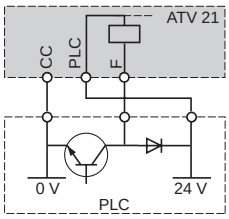

2-wire control

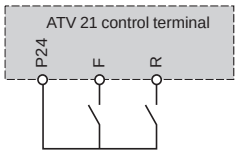

F: Forward
R: Preset speed

3-wire control

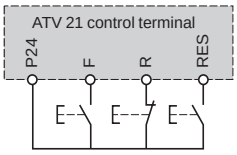

F: Forward
R: Preset speed
RES: Fault reset

PTC probe

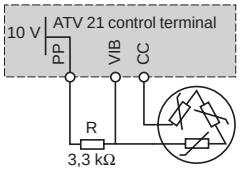

Voltage analog inputs

External + 10 V

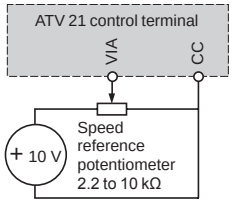

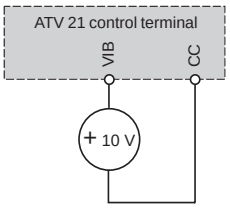

Analog input configured for current

0-20 mA, 4-20 mA, X-Y mA

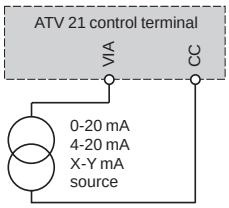

VIA analog input configured as logic input

Positive logic ("Source" position)

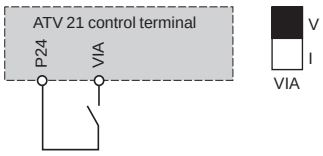

Negative logic ("Sink"position)

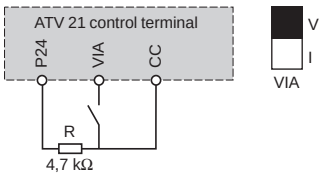

Additional EMC input filters VW3 A31 404, 406…409, VW3 A4 406…408

Three-phase power supply

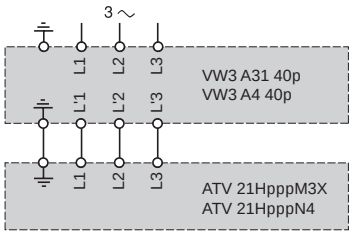

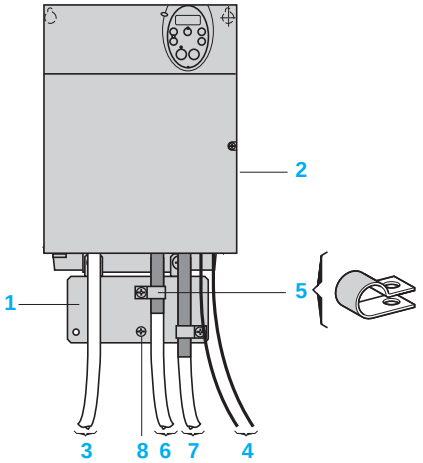

ATV 21H075M3X…HD18M3X,
ATV 21H075N4…HD18N4

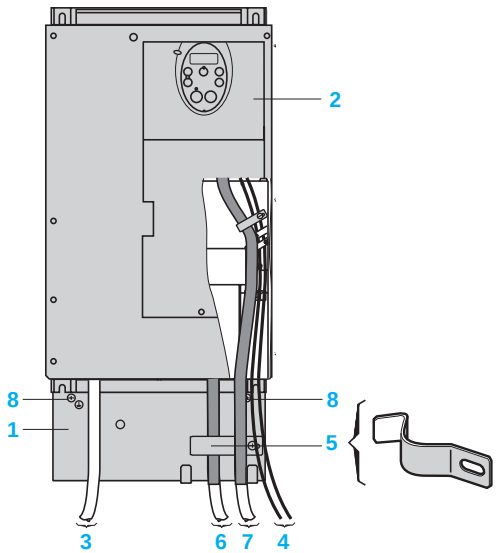

ATV 21HD22M3X, HD30M3X,
ATV 21HD22N4…HD75N4

Connections ensuring conformity with EMC standards

Principle

■ Earths between the drive, motor and cable shielding must have "high frequency" equipotentiality.

■ Use shielded cables with shielding connected to earth throughout 360° at both ends for the motor cable and the control-signal cables. Conduit or metal ducting can be used for part of the shielding length provided that there is no break in the continuity of the earth connection.

■ Ensure maximum separation between the power supply cable (line supply) and the motor cable.

Installation diagram for ATV 21H●●●M3X and ATV 21H●●●N4 drives

1 Steel plate to be mounted on the drive (earthed casing).
2 UL Type 1/IP 20 Altivar 21 drive.
3 Unshielded power supply wires or cable.
4 Unshielded wires for the output of the safety relay contacts.
5 Attach and earth the shielding of cables 6 and 7 as close as possible to the drive:
- Strip the shielding.
- Attach the cable to the plate 1 by attaching the clamp to the stripped part of the shielding.
The shielding must be clamped tightly enough to the metal surface to ensure good contact.
6 Shielded cable for connecting the motor
7 Shielded cable for connecting the control-signal section
For applications requiring several conductors, use cables with a small cross-section (0.5 mm^2).
For cables 6 and 7, the shielding must be connected to earth at both ends. The shielding must be continuous and intermediate terminals must be placed in EMC shielded metal boxes.
8 Earthing screw: Use this screw for the motor cable on drives with lower power ratings, as the screw on the heatsink is inaccessible.

Note: *The HF equipotential earth connection between the drive, motor and cable shielding does not remove the need to connect the PE conductors (green-yellow) to the appropriate terminals on each unit.*
If using an additional EMC input filter, it is usually mounted under the drive and connected directly to the line supply via an unshielded cable. Link 3 on the drive is then via the filter output cable.

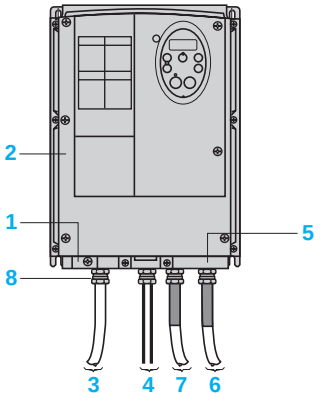

ATV 21W075N4…WU75N4,
ATV 21W075N4C…WU75N4C

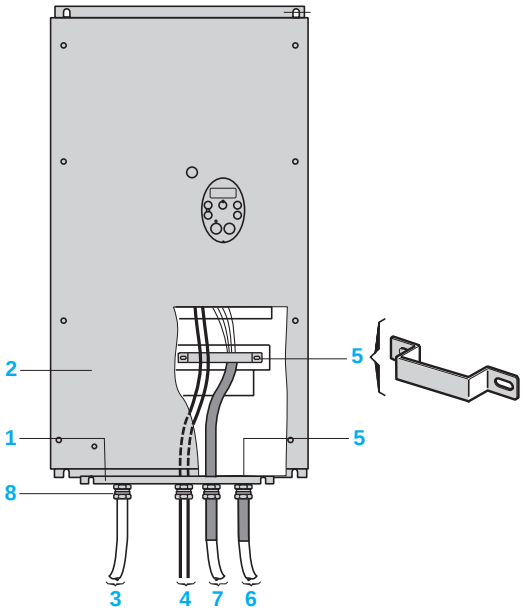

ATV 21WD11N4…WD30N4,
ATV 21WD11N4C…WD75N4C

Connections ensuring conformity with EMC standards (continued)

Installation diagram for ATV 21W●●●N4, ATV 21W●●●N4C drives

1 Steel plate to be mounted on the drive (earthed casing).
2 UL Type 12/IP 54 Altivar 21 drive.
3 Unshielded power supply wires or cable.
4 Unshielded wires for the output of the safety relay contacts.
5 Attach and earth the shielding of cables 6 and 7 as close as possible to the drive:
- Strip the shielding.
- Attach the shielded cable to the cable gland 8 ensuring it is fully in contact (throughout 360°). - Fold back the shielding and clamp it between the ring and the body of the cable gland.
Depending on the rating, the shielding of cable 7 can be earthed using a cable gland 8 or a cable clip 5.
The shielding must be clamped tightly enough to the metal surface to ensure good contact.
6 Shielded cable for connecting the motor
7 Shielded cable for connecting the control-signal section
For applications requiring several conductors, use cables with a small cross-section (0.5 mm²).
For cables 6 and 7, the shielding must be connected to ground at both ends.
The shielding must be continuous and intermediate terminals must be placed in EMC shielded metal boxes.
8 Metal cable gland (not supplied) for cables 6 and 7.
Standard cable gland (not supplied) for cables 3 and 4.

Note: *The HF equipotential earth connection between the drive, motor and cable shielding does not remove the need to connect the PE conductors (green-yellow) to the appropriate terminals on each unit.*

Operation on an IT system

IT system: Isolated or impedance earthed neutral
Use a permanent insulation monitor compatible with non-linear loads, such as an XM200 (please contact our Customer Care Centre).

ATV 21●●●●N4 and ATV 21W●●●N4C drives have built-in EMC filters. These filters can be easily disconnected if using an IT system and, if necessary, reconnected just as easily.

Variable speed drives

Altivar 21

Motor starters: 200…240 V supply voltage

DF535086

103279-08-M

PF106478-16-Q

GV2 L08
+
LC1 D09●●
+
ATV 21H075M3X

Applications

Circuit-breaker/contactor/drive combinations can be used to ensure continuous service of the installation with optimum safety.
The type of circuit-breaker/contactor coordination selected can reduce maintenance costs in the event of a motor short-circuit by minimizing the time required to make the necessary repairs and the cost of replacement equipment. The suggested combinations provide type 1 or type 2 coordination depending on the drive rating.
Type 2 coordination: A motor short-circuit will not damage the device or affect its settings. The motor starter should be able to operate once the electrical fault has been removed. The electrical isolation provided by the circuit-breaker will not be affected by the short-circuit. Welding of the contactor contacts is permissible if they can be separated easily.
Type 1 coordination: The electrical isolation provided by the circuit-breaker will not be affected by the incident and no other elements apart from the contactor are damaged as a result of the motor short-circuit.
The drive controls the motor, provides protection against short-circuits between the drive and the motor and protects the motor cable against overloads. The overload protection is provided by the drive's motor thermal protection. If this protection is dispensed with, external thermal protection must be provided.
Before restarting the installation, the cause of the trip must be removed.

Motor starters for UL Type 1/IP 20 drives

Motor Power (1)		Drive Reference	Circuit-breaker Reference (2)	Rating	Im	Line contactor Reference (3) (4)
kW	HP			A	A	
Three-phase supply voltage: 200…240 V 50/60 Hz. Type 2 coordination						
0.75	1	ATV 21H075M3X	GV2 L08	4	–	LC1 D09●●
1.5	2	ATV 21HU15M3X	GV2 L10	6.3	–	LC1 D09●●
2.2	3	ATV 21HU22M3X	GV2 L14	10	–	LC1 D09●●
3	–	ATV 21HU30M3X	GV2 L16	14	–	LC1 D09●●
4	5	ATV 21HU40M3X	GV2 L20	18	–	LC1 D09●●
5.5	7.5	ATV 21HU55M3X	GV2 L22	25	–	LC1 D09●●
7.5	10	ATV 21HU75M3X	GV2 L32	32	–	LC1 D18●●
11	15	ATV 21HD11M3X	GV3 L50	50	–	LC1 D32●●
15	20	ATV 21HD15M3X	GV3 L65	65	–	LC1 D40●●
18.5	25	ATV 21HD18M3X	NSX100●MA100	100	600	LC1 D80●●
22	30	ATV 21HD22M3X	NSX100●MA100	100	600	LC1 D80●●
30	40	ATV 21HD30M3X	NSX160●MA150	150	1350	LC1 D115●●
Three-phase supply voltage: 200…240 V 50/60 Hz. Type 1 coordination						
0.75	1	ATV 21H075M3X	GV2 LE08	4	–	LC1 K06●●
1.5	2	ATV 21HU15M3X	GV2 LE10	6.3	–	LC1 K06●●
2.2	3	ATV 21HU22M3X	GV2 LE14	10	–	LC1 K06●●
3	–	ATV 21HU30M3X	GV2 LE16	14	–	LC1 K06●●
4	5	ATV 21HU40M3X	GV2 LE20	18	–	LC1 K06●●
5.5	7.5	ATV 21HU55M3X	GV2 LE22	25	–	LC1 D09●●
7.5	10	ATV 21HU75M3X	GV2 LE32	32	–	LC1 D18●●
11	15	ATV 21HD11M3X	GV3 L50	50	–	LC1 D32●●
15	20	ATV 21HD15M3X	GV3 L65	65	–	LC1 D40●●
18.5	25	ATV 21HD18M3X	NSX100●MA100	100	600	LC1 D50●●
22	30	ATV 21HD22M3X	NSX100●MA100	100	600	LC1 D80●●
30	40	ATV 21HD30M3X	NSX160●MA150	150	1350	LC1 D115●●

(1) Standard power ratings for 230 V 50/60 Hz 4-pole motors.
The values expressed in HP conform to the NEC (National Electrical Code).
(2) For references to be completed, replace the dot with the letter corresponding to the circuit-breaker breaking performance (B, F, N, H, S or L). Breaking capacity of circuit-breakers according to standard IEC 60947-2:

Circuit-breaker	Icu (kA) for 240 V						
		B	F	N	H	S	L
GV2 L08…GV2 L20 GV2 LE08…GV2 LE20	100	–	–	–	–	–	–
GV2 L22, GV2 L32, GV2 LE22, GV2 LE32	50	–	–	–	–	–	–
GV3 L50, GV3 L65	100	–	–	–	–	–	–
NSX100●MA, NSX160●MA	–	40	85	85	100	120	150

(3) Composition of contactors:
LC1 K06, LC1 D09 to LC1 D115: 3 poles + 1 N/O auxiliary contact and 1 N/C auxiliary contact.
Replace ●● with the control circuit voltage reference given in the table below:

	Volts ∼	24	48	110	220	230	240
LC1 K06	50/60 Hz	B7	E7	F7	M7	P7	U7
LC1 D09…D115	50 Hz	B5	E5	F5	M5	P5	U5
	60 Hz	B6	E6	F6	M6	–	U6
	50/60 Hz	B7	E7	F7	M7	P7	U7

For other voltages available between 24 V and 660 V, or a DC control circuit, please contact our Customer Care Centre.

Variable speed drives
Altivar 21
Motor starters: 380…415 V supply voltage

DF536623

103283-07-M

106485-327-Q

GV3 L50
+
LC1 D32●●
+
ATV 21HD22N4

Motor starters for UL Type 1/IP 20 drives (continued)

Motor Power (1) kW	HP	Drive Reference	Circuit-breaker Reference (2)	Rating A	Im A	Line contactor Reference (3) (4)
Three-phase supply voltage: 380…415 V 50/60 Hz. Type 2 coordination						
0.75	1	ATV 21H075N4	GV2 L07	2.5	–	LC1 D09●●
1.5	2	ATV 21HU15N4	GV2 L08	4	–	LC1 D09●●
2.2	3	ATV 21HU22N4	GV2 L10	6.3	–	LC1 D09●●
3	–	ATV 21HU30N4	GV2 L10	6.3	–	LC1 D09●●
4	5	ATV 21HU40N4	GV2 L14	10	–	LC1 D09●●
5.5	7.5	ATV 21HU55N4	GV2 L16	14	–	LC1 D09●●
7.5	10	ATV 21HU75N4	GV2 L20	18	–	LC1 D09●●
11	15	ATV 21HD11N4	GV2 L22	25	–	LC1 D09●●
15	20	ATV 21HD15N4	GV2 L32	32	–	LC1 D18●●
18.5	25	ATV 21HD18N4	GV3 L40	40	–	LC1 D32●●
22	30	ATV 21HD22N4	GV3 L50	50	–	LC1 D32●●
30	40	ATV 21HD30N4	GV3 L65	65	–	LC1 D40●●
37	50	ATV 21HD37N4	NS80HMA80	80	480	LC1 D80●●
45	60	ATV 21HD45N4	NSX100●MA100	100	600	LC1 D115●●
55	75	ATV 21HD55N4	NSX160●MA150	150	1350	LC1 D115●●
75	100	ATV 21HD75N4	NSX250●MA220	220	1980	LC1 F185●●
Three-phase supply voltage: 380…415 V 50/60 Hz. Type 1 coordination						
0.75	1	ATV 21H075N4	GV2 LE07	2.5	–	LC1 K06●●
1.5	2	ATV 21HU15N4	GV2 LE08	4	–	LC1 K06●●
2.2	3	ATV 21HU22N4	GV2 LE10	6.3	–	LC1 K06●●
3	–	ATV 21HU30N4	GV2 LE10	6.3	–	LC1 K06●●
4	5	ATV 21HU40N4	GV2 LE14	10	–	LC1 K06●●
5.5	7.5	ATV 21HU55N4	GV2 LE16	14	–	LC1 K06●●
7.5	10	ATV 21HU75N4	GV2 LE20	18	–	LC1 K06●●
11	15	ATV 21HD11N4	GV2 LE22	25	–	LC1 D09●●
15	20	ATV 21HD15N4	GV2 LE32	32	–	LC1 D18●●
18.5	25	ATV 21HD18N4	GV3 L40	40	–	LC1 D32●●
22	30	ATV 21HD22N4	GV3 L50	50	–	LC1 D32●●
30	40	ATV 21HD30N4	GV3 L65	65	–	LC1 D40●●
37	50	ATV 21HD37N4	NS80HMA80	80	480	LC1 D80●●
45	60	ATV 21HD45N4	NSX100●MA100	100	600	LC1 D115●●
55	75	ATV 21HD55N4	NSX160●MA150	150	1350	LC1 D115●●
75	100	ATV 21HD75N4	NSX250●MA220	220	1980	LC1 D115●●

(1) Standard power ratings for 400 V 50/60 Hz 4-pole motors.
The values expressed in HP conform to the NEC (National Electrical Code).
(2) For references to be completed, replace the dot with the letter corresponding to the circuit-breaker breaking performance (B, F, N, H, S or L).
Breaking capacity of circuit-breakers according to standard IEC 60947-2:

Circuit-breaker	Icu (kA) for 400 V	B	F	N	H	S	L
GV2 L07…L14	100	–	–	–	–	–	–
GV2 L16…L32, GV3 L40…L65	50	–	–	–	–	–	–
GV2 LE07…LE22	15	–	–	–	–	–	–
GV2 LE32	10	–	–	–	–	–	–
NS80HMA	70	–	–	–	–	–	–
NSX●●●●MA	–	25	36	50	70	100	150

(3) Composition of contactors:
LC1 K06, LC1 D09 to LC1 D115: 3 poles + 1 N/O auxiliary contact and 1 N/C auxiliary contact.
LC1 F185: 3 poles. To add auxiliary contacts or other accessories, please refer to the "Motor-starter solutions - Control and protection components" catalogue.
Replace ●● with the control circuit voltage reference given in the table below:

	Volts ∿	24	48	110	220	230	240
LC1 K06	50/60 Hz	B7	E7	F7	M7	P7	U7
LC1 D09…D115	50 Hz	B5	E5	F5	M5	P5	U5
	60 Hz	B6	E6	F6	M6	–	U6
	50/60 Hz	B7	E7	F7	M7	P7	U7
LC1 F185	50 Hz (LX1 coil)	B5	E5	F5	M5	P5	U5
	60 Hz (LX1 coil)	–	E6	F6	M6	–	U6
	40…400 Hz (LX9 coil)	–	E7	F7	M7	P7	U7

For other voltages available between 24 V and 660 V, or a DC control circuit, please contact our Customer Care Centre.

Variable speed drives

Altivar 21

Motor starters: 380…415 V supply voltage

DF535086

103279-08-M

PF106476-29_Q

GV2 L07
+
LC1 D09●●
+
ATV 21W075N4

Motor starters for UL Type 12 /IP 54 drives

Motor Power *(1)* kW	HP	Drive Reference	Circuit-breaker Reference *(2)*	Rating A	Im A	Line contactor Reference *(3) (4)*
Three-phase supply voltage: 380…415 V 50/60 Hz. Type 2 coordination						
0.75	*1*	**ATV 21W075N4** **ATV 21W075N4C**	**GV2 L07**	2.5	–	**LC1 D09●●**
1.5	*2*	**ATV 21WU15N4** **ATV 21WU15N4C**	**GV2 L08**	4	–	**LC1 D09●●**
2.2	*3*	**ATV 21WU22N4** **ATV 21WU22N4C**	**GV2 L10**	6.3	–	**LC1 D09●●**
3	–	**ATV 21WU30N4** **ATV 21WU30N4C**	**GV2 L10**	6.3	–	**LC1 D09●●**
4	*5*	**ATV 21WU40N4** **ATV 21WU40N4C**	**GV2 L14**	10	–	**LC1 D09●●**
5.5	*7.5*	**ATV 21WU55N4** **ATV 21WU55N4C**	**GV2 L16**	14	–	**LC1 D09●●**
7.5	*10*	**ATV 21WU75N4** **ATV 21WU75N4C**	**GV2 L20**	18	–	**LC1 D09●●**
11	*15*	**ATV 21WD11N4** **ATV 21WD11N4C**	**GV2 L22**	25	–	**LC1 D09●●**
15	*20*	**ATV 21WD15N4** **ATV 21WD15N4C**	**GV2 L32**	32	–	**LC1 D18●●**
18.5	*25*	**ATV 21WD18N4** **ATV 21WD18N4C**	**GV3 L40**	40	–	**LC1 D25●●**
22	*30*	**ATV 21WD22N4** **ATV 21WD22N4C**	**GV3 L50**	50	–	**LC1 D32●●**
30	*40*	**ATV 21WD30N4** **ATV 21WD30N4C**	**GV3 L65**	65	–	**LC1 D40●●**
37	*50*	**ATV 21WD37N4** **ATV 21WD37N4C**	**NS80HMA80**	80	480	**LC1 D80●●**
45	*60*	**ATV 21WD45N4** **ATV 21WD45N4C**	**NSX100●MA100**	100	600	**LC1 D80●●**
55	*75*	**ATV 21WD55N4** **ATV 21WD55N4C**	**NSX160●MA150**	150	1350	**LC1 D115●●**
75	*100*	**ATV 21WD75N4** **ATV 21WD75N4C**	**NSX250●MA150**	150	1350	**LC1 D115●●**

(1) Standard power ratings for 400 V 50/60 Hz 4-pole motors.
The values expressed in HP conform to the NEC (National Electrical Code).
(2) For references to be completed, replace the dot with the letter corresponding to the circuit-breaker breaking performance (B, F, N, H, S or L).
Breaking capacity of circuit-breakers according to standard IEC 60947-2:

Circuit-breaker	Icu (kA) for 400 V	B	F	N	H	S	L
GV2 L07…L14	100	–	–	–	–	–	–
GV2 L16…L32, GV3 L40…L65	50	–	–	–	–	–	–
NS80HMA	70	–	–	–	–	–	–
NSX●●●●MA	–	25	36	50	70	100	150

(3) Composition of contactors:
LC1 D09 to LC1 D115: 3 poles + 1 N/O auxiliary contact and 1 N/C auxiliary contact.
(4) Replace ●● with the control circuit voltage reference given in the table below:

	Volts ∿	24	48	110	220	230	240
LC1 D09…D115	50 Hz	**B5**	**E5**	**F5**	**M5**	**P5**	**U5**
	60 Hz	**B6**	**E6**	**F6**	**M6**	**–**	**U6**
	50/60 Hz	**B7**	**E7**	**F7**	**M7**	**P7**	**U7**

For other voltages available between 24 V and 660 V, or a DC control circuit, please contact our Customer Care Centre.

Variable speed drives
Altivar 21
Motor starters: 380…415 V supply voltage

DF536623

103283-07-M

PF106483-33-Q

GV3 L40
+
LC1 D25●●
+
ATV 21WD18N4

Motor starters for UL Type 12/IP 54 drives (continued)

Motor Power *(1)* kW	HP	Drive Reference	Circuit-breaker Reference *(2)*	Rating A	Im A	Line contactor Reference *(3) (4)*
Three-phase supply voltage: 380…415 V 50/60 Hz. Type 1 coordination						
0.75	*1*	**ATV 21W075N4** **ATV 21W075N4C**	**GV2 LE07**	2.5	–	**LC1 K06●●**
1.5	*2*	**ATV 21WU15N4** **ATV 21WU15N4C**	**GV2 LE08**	4	–	**LC1 K06●●**
2.2	*3*	**ATV 21WU22N4** **ATV 21WU22N4C**	**GV2 LE10**	6.3	–	**LC1 K06●●**
3	–	**ATV 21WU30N4** **ATV 21WU30N4C**	**GV2 LE10**	6.3	–	**LC1 K06●●**
4	*5*	**ATV 21WU40N4** **ATV 21WU40N4C**	**GV2 LE14**	10	–	**LC1 K06●●**
5.5	*7.5*	**ATV 21WU55N4** **ATV 21WU55N4C**	**GV2 LE16**	14	–	**LC1 K06●●**
7.5	*10*	**ATV 21WU75N4** **ATV 21WU75N4C**	**GV2 LE20**	18	–	**LC1 K06●●**
11	*15*	**ATV 21WD11N4** **ATV 21WD11N4C**	**GV2 LE22**	25	–	**LC1 D09●●**
15	*20*	**ATV 21WD15N4** **ATV 21WD15N4C**	**GV2 LE32**	32	–	**LC1 D18●●**
18.5	*25*	**ATV 21WD18N4** **ATV 21WD18N4C**	**GV3 L40**	40	–	**LC1 D25●●**
22	*30*	**ATV 21WD22N4** **ATV 21WD22N4C**	**GV3 L50**	50	–	**LC1 D32●●**
30	*40*	**ATV 21WD30N4** **ATV 21WD30N4C**	**GV3 L65**	65	–	**LC1 D40●●**
37	*50*	**ATV 21WD37N4** **ATV 21WD37N4C**	**NS80HMA80**	80	480	**LC1 D50●●**
45	*60*	**ATV 21WD45N4** **ATV 21WD45N4C**	**NSX100●MA100**	100	600	**LC1 D80●●**
55	*75*	**ATV 21WD55N4** **ATV 21WD55N4C**	**NSX160●MA150**	150	1350	**LC1 D80●●**
75	*100*	**ATV 21WD75N4** **ATV 21WD75N4C**	**NSX250●MA150**	150	1350	**LC1 D115●●**

(1) Standard power ratings for 400 V 50/60 Hz 4-pole motors.
The values expressed in HP conform to the NEC (National Electrical Code).
(2) For references to be completed, replace the dot with the letter corresponding to the circuit-breaker breaking performance (B, F, N, H, S or L).
Breaking capacity of circuit-breakers according to standard IEC 60947-2:

Circuit-breaker	Icu (kA) for 400 V	B	F	N	H	S	L
GV2 LE07…LE14	100	–	–	–	–	–	–
GV2 LE16…LE22	15	–	–	–	–	–	–
GV2 LE32	10	–	–	–	–	–	–
GV3 L●●	50	–	–	–	–	–	–
NS80HMA	70	–	–	–	–	–	–
NSX●●●●MA	–	25	36	50	70	100	150

(3) Composition of contactors:
LC1 K06, LC1 D09 to LC1 D115: 3 poles + 1 N/O auxiliary contact and 1 N/C auxiliary contact.
(4) Replace ●● with the control circuit voltage reference given in the table below:

	Volts ∿	24	48	110	220	230	240
LC1 K06	50/60 Hz	**B7**	**E7**	**F7**	**M7**	**P7**	**U7**
LC1 D09…D115	50 Hz	**B5**	**E5**	**F5**	**M5**	**P5**	**U5**
	60 Hz	**B6**	**E6**	**F6**	**M6**	**–**	**U6**
	50/60 Hz	**B7**	**E7**	**F7**	**M7**	**P7**	**U7**

For other voltages available between 24 V and 660 V, or a DC control circuit, please contact our Customer Care Centre.

Mounting recommendations

Depending on the conditions in which the drive is to be used, its installation will require certain precautions and the use of appropriate accessories.
Install the unit vertically:
- Do not place it close to heating elements.
- Leave sufficient free space to ensure that the air required for cooling purposes can circulate from the bottom to the top of the unit.

ATV 21H●●●M3X, ATV 21H●●●N4

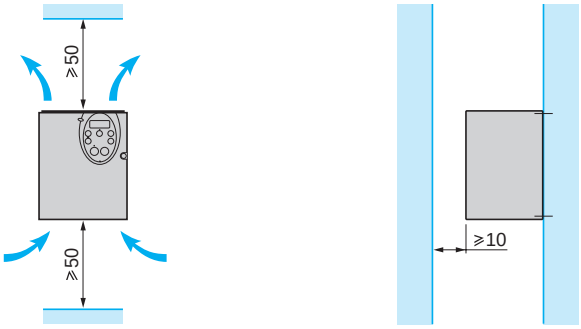

534963

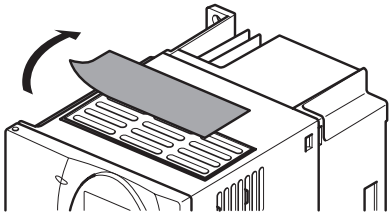

Remove the protective blanking cover for:
ATV 21H075M3X...HD18M3X,
ATV 21H075N4...HD18N4

534964

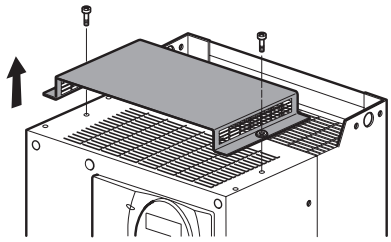

Remove the protective blanking cover for:
ATV 21HD22M3X, HD30M3X,
ATV 21HD22N4...HD75N4

Mounting types

■ **Mounting A**

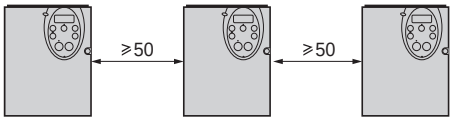

■ **Mounting B**

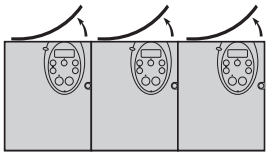

■ **Mounting C**

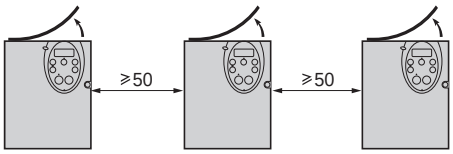

By removing the protective blanking cover from the top of the drive, the degree of protection for the drive becomes IP 20. The protective blanking cover may vary according to the drive model, see opposite.

Mounting recommendations (continued)

Derating curves

The derating curves for the drive nominal current (In) depend on the temperature, the switching frequency and the mounting type.

For intermediate temperatures (45°C for example), interpolate between 2 curves.

ATV 21H075M3X

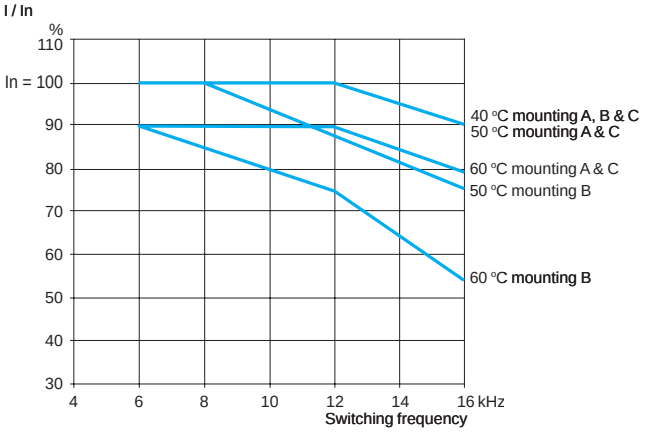

ATV 21HU15M3X

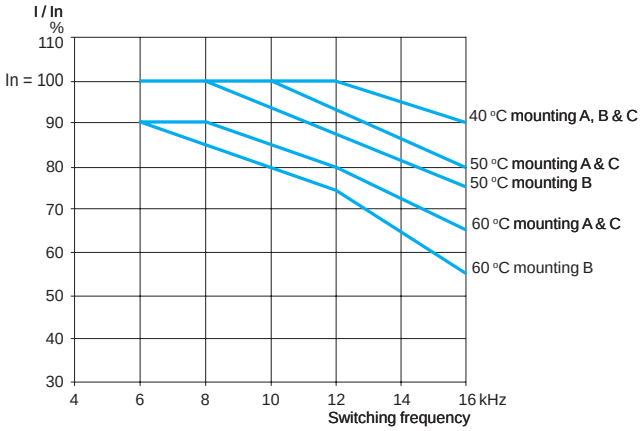

ATV 21HU22M3X

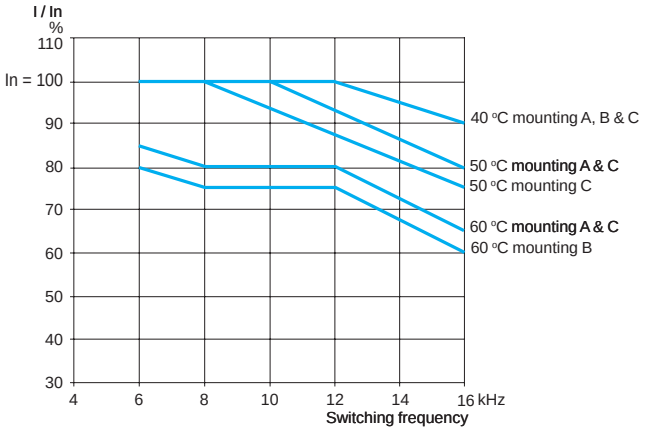

ATV 21HU30M3X, HU40M3X

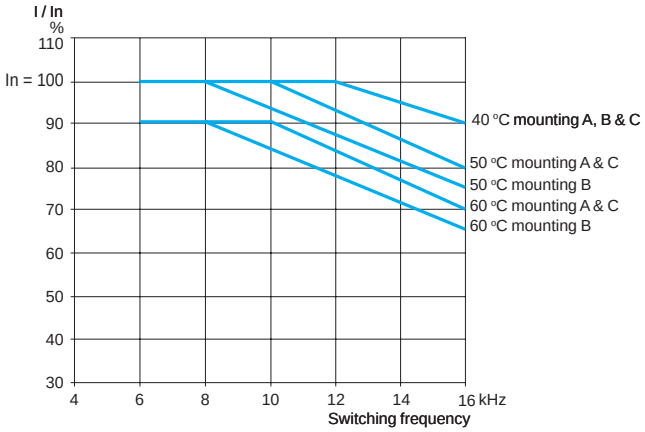

Mounting recommendations (continued)

Derating curves

ATV 21HU55M3X

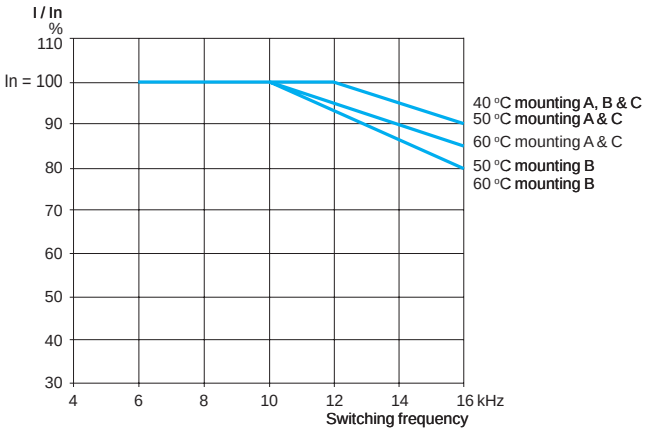

ATV 21HU75M3X

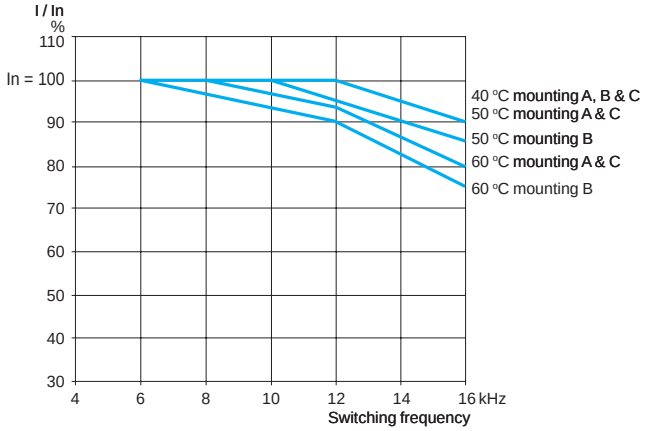

ATV 21HD11M3X

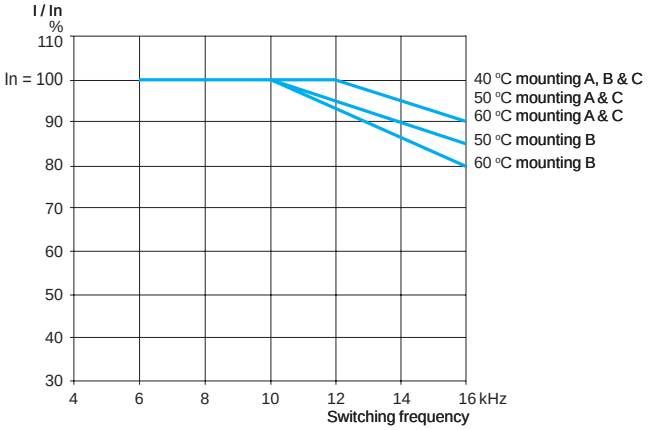

ATV 21HD15M3X

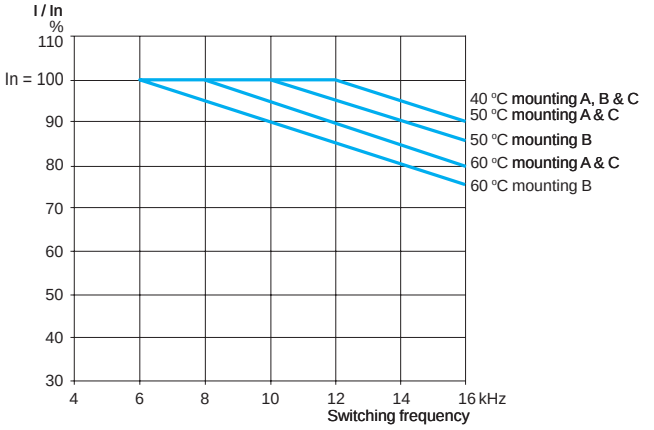

ATV 21HD18M3X

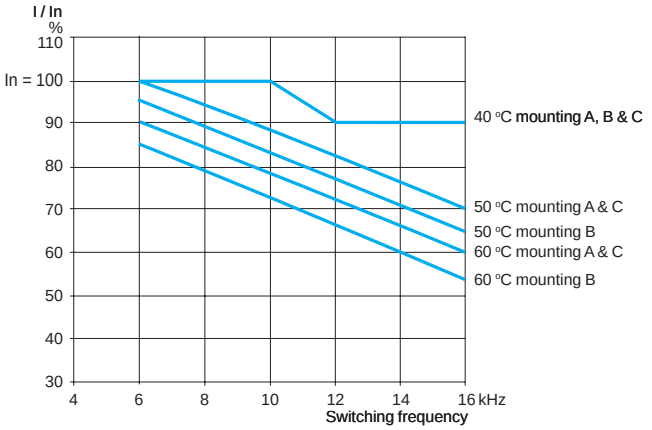

ATV 21HD22M3X

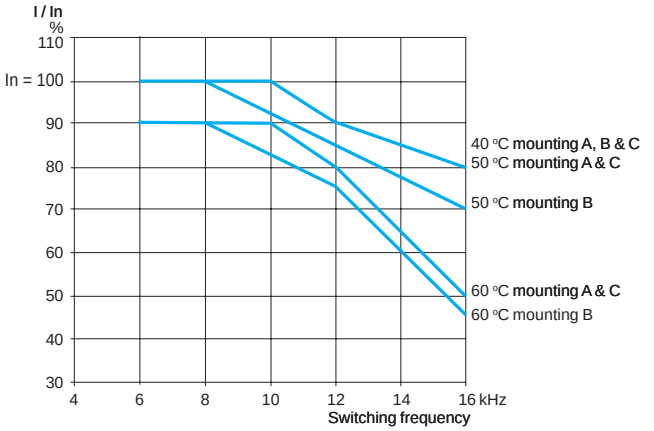

Mounting recommendations (continued)

Derating curves

ATV 21HD30M3X

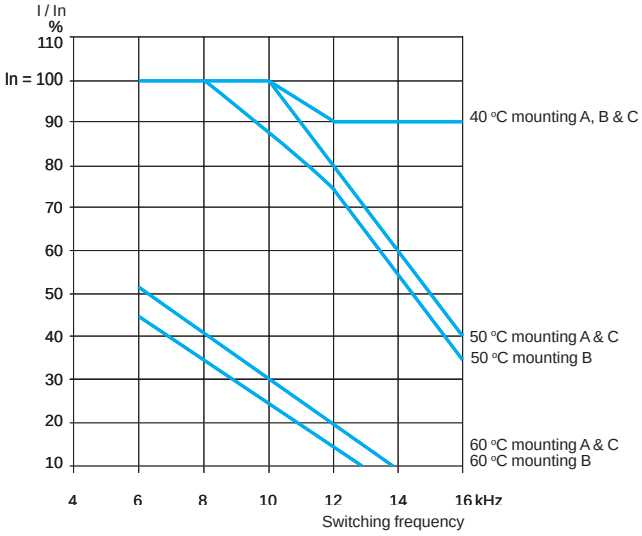

ATV 21H075N4

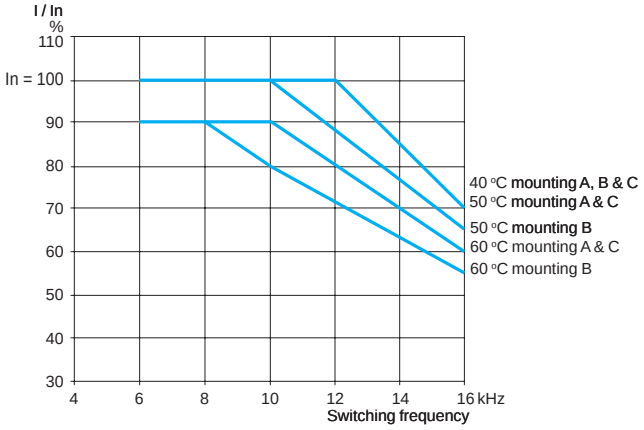

ATV 21HU15N4

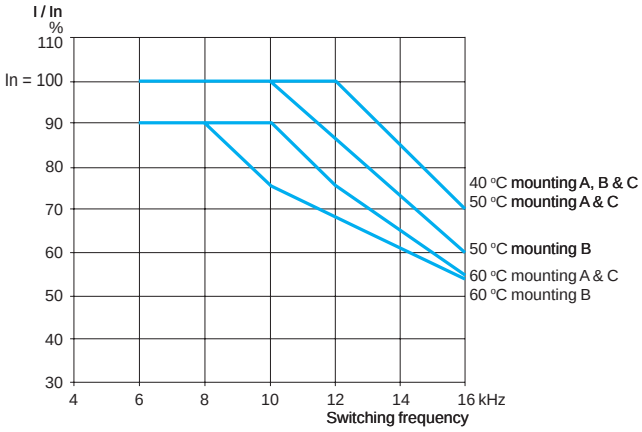

ATV 21HU22N4

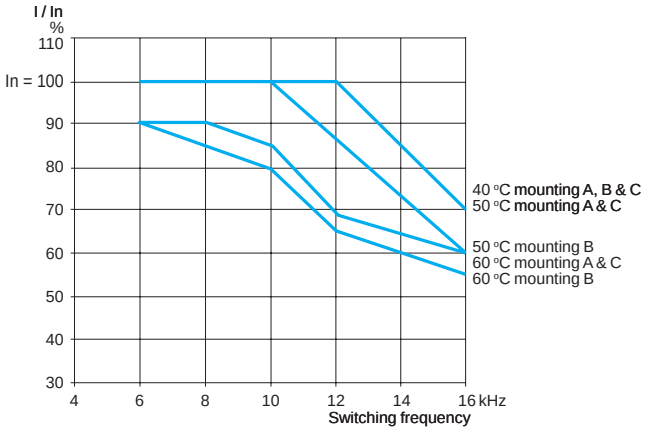

ATV 21HU30N4, HU40N4

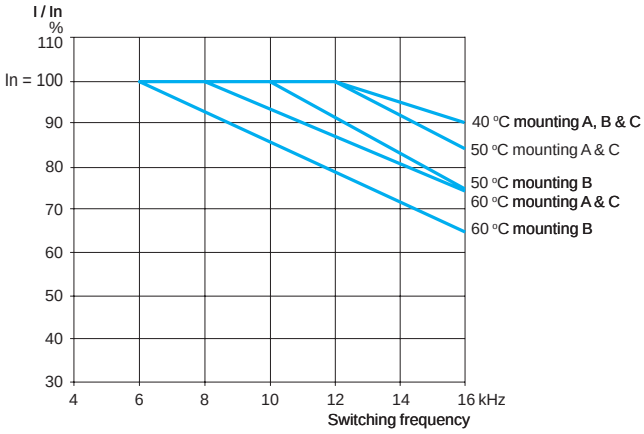

ATV 21HU55N4

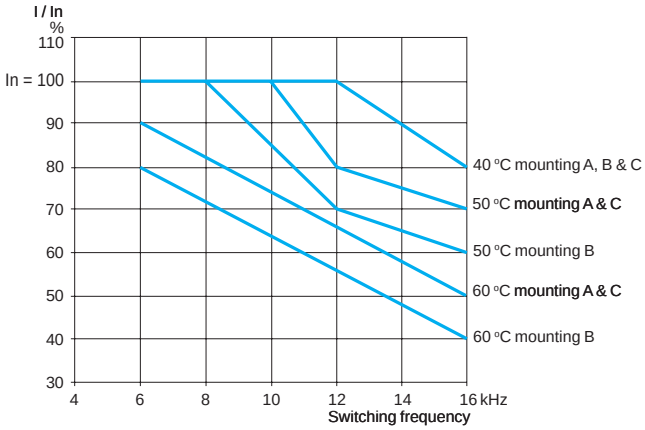

Mounting recommendations (continued)

Derating curves

ATV 21HU75N4

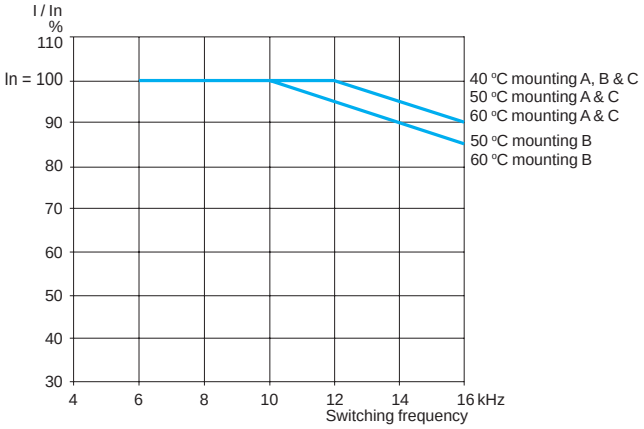

ATV 21HD11N4

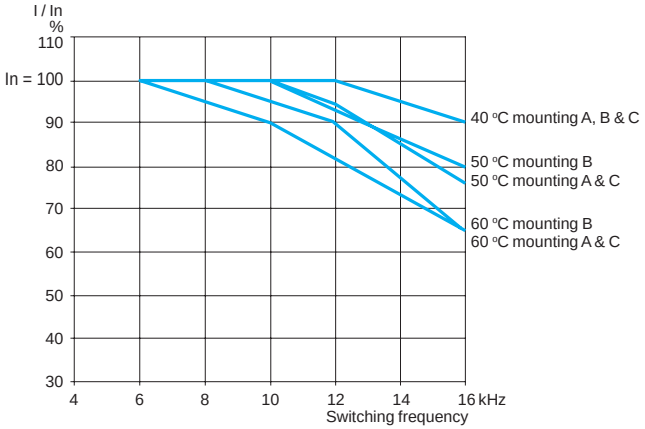

ATV 21HD15N4

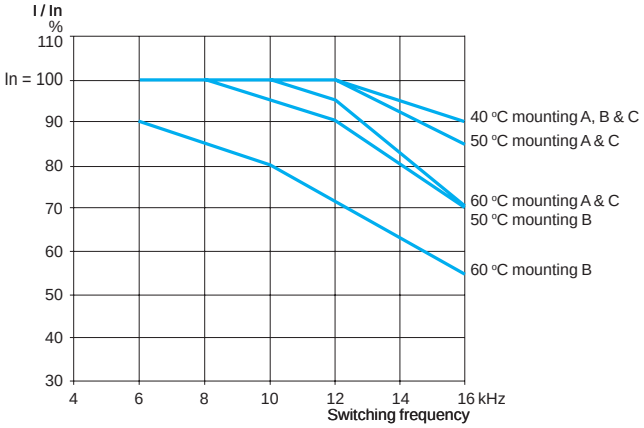

ATV 21HD18N4

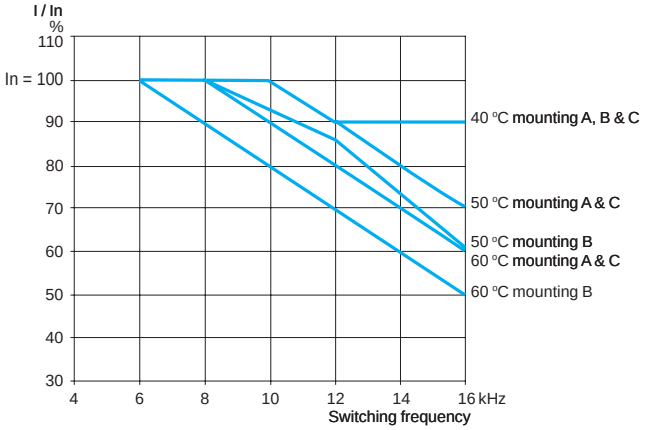

ATV 21HD22N4

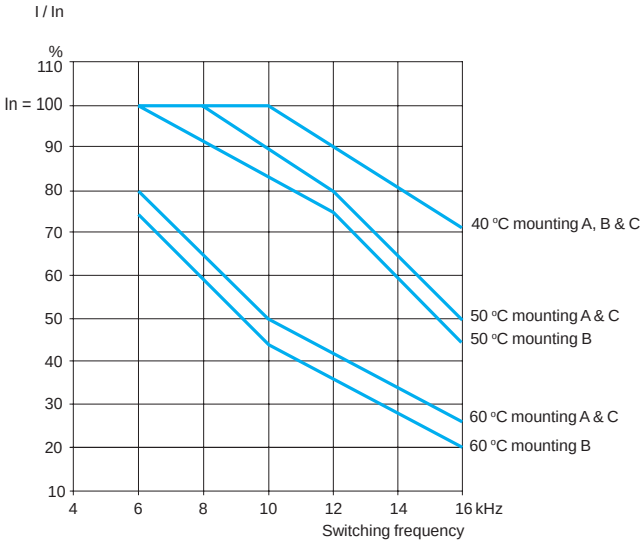

ATV 21HD30N4

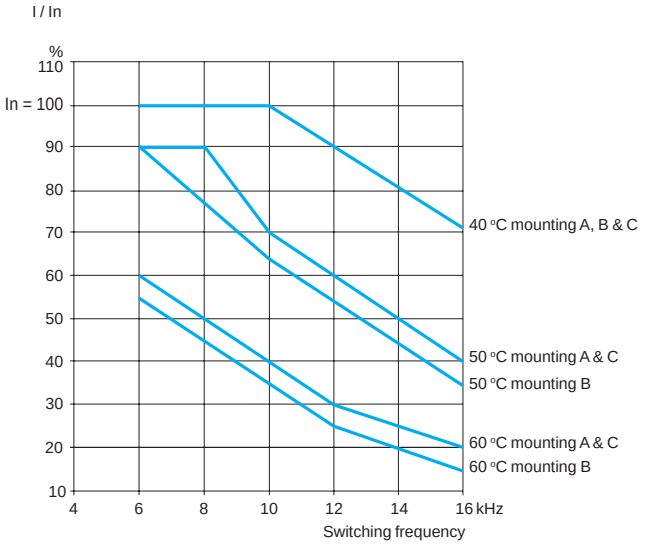

Mounting recommendations (continued)

Derating curves

ATV 21HD37N4

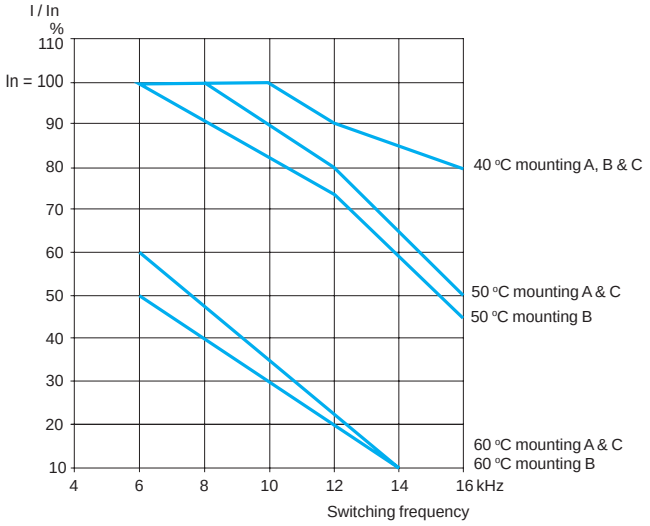

ATV 21HD45N4

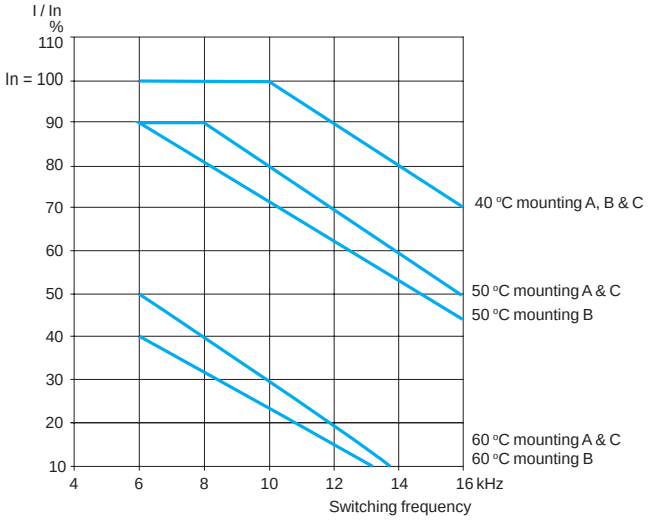

ATV 21HD55N4

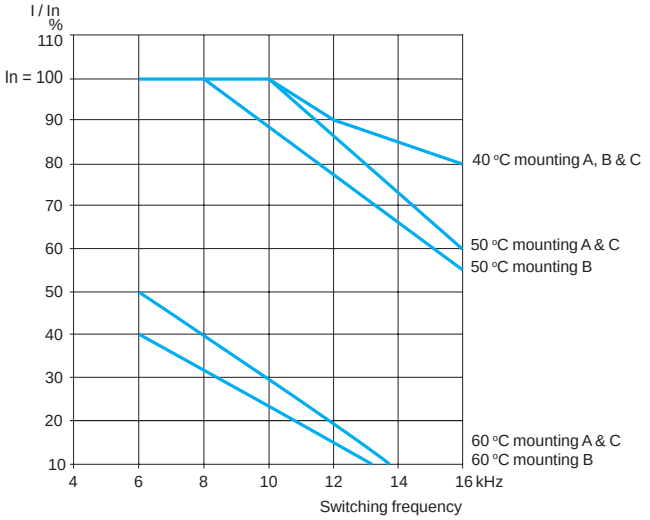

ATV 21HD75N4

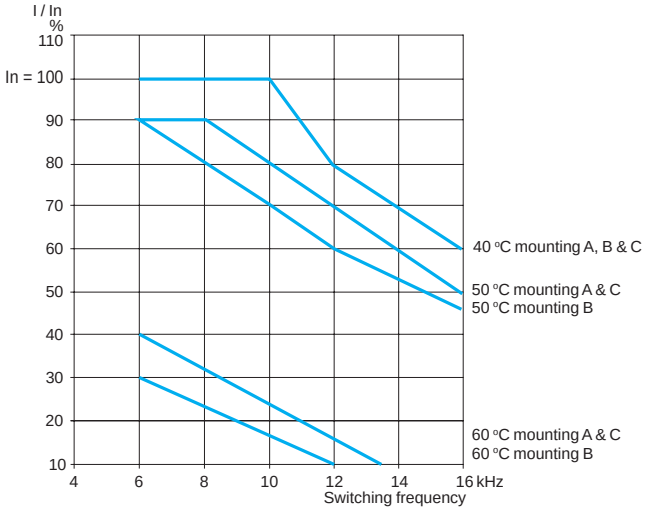

Mounting recommendations (continued)

Depending on the conditions in which the drive is to be used, its installation will require certain precautions and the use of appropriate accessories.
Install the unit vertically:
- Do not place it close to heating elements.
- Leave sufficient free space to ensure that the air required for cooling purposes can circulate from the bottom to the top of the unit.

ATV 21W●●●N4, ATV 21W●●●N4C

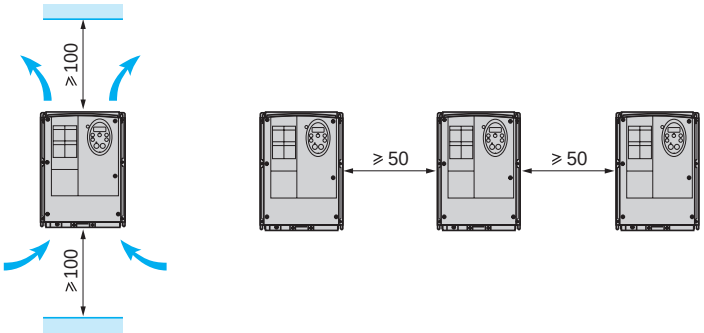

Derating curves

ATV 21W075N4…WU75N4, ATV 21W075N4C…WU75N4C

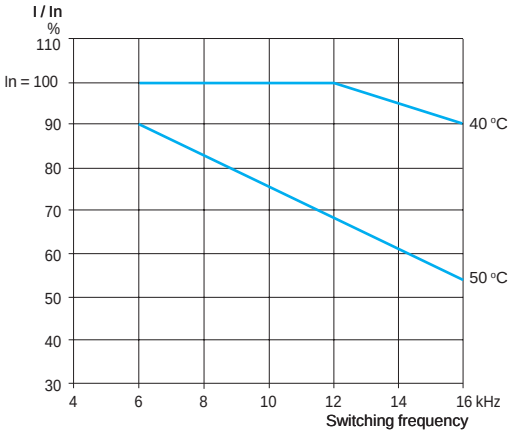

ATV 21WD11N4, ATV 21WD11N4C

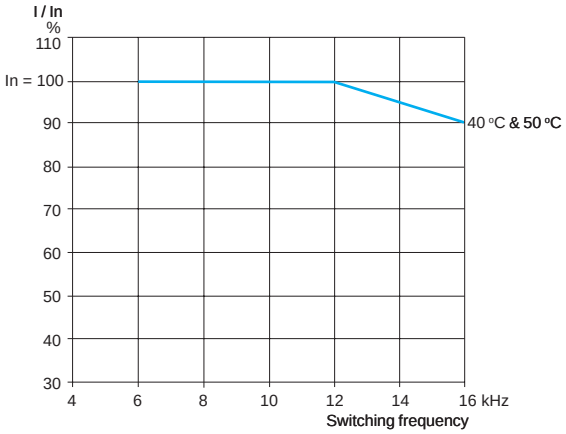

ATV 21WD15N4, ATV 21WD15N4C

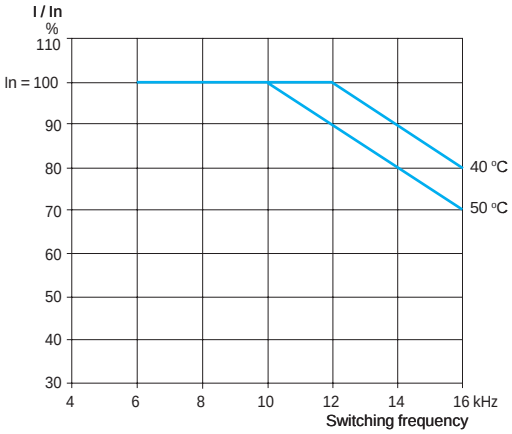

ATV 21WD18N4, ATV 21WD18N4C

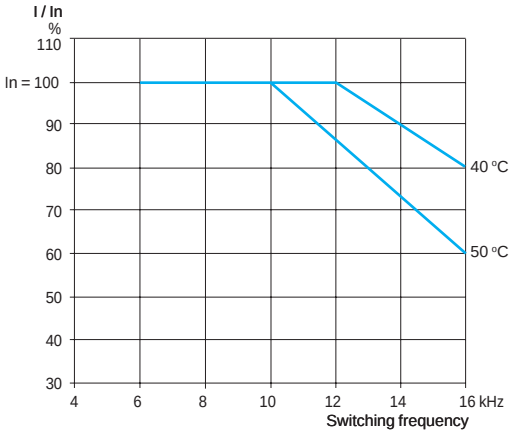

Mounting recommendations (continued)

Derating curves

ATV 21WD22N4, ATV 21WD22N4C

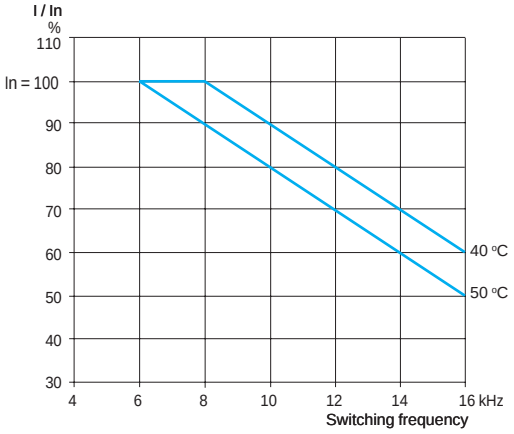

ATV 21WD30N4, ATV 21WD30N4C

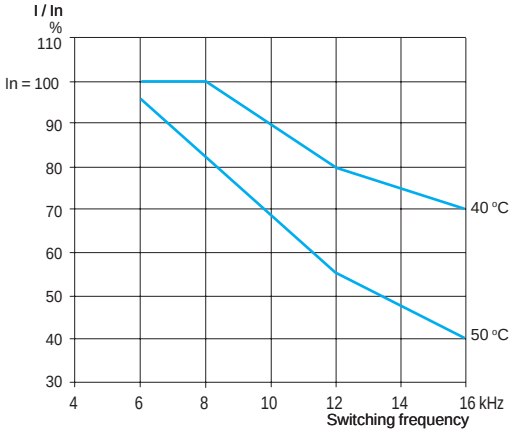

ATV 21WD37N4, ATV 21WD37N4C

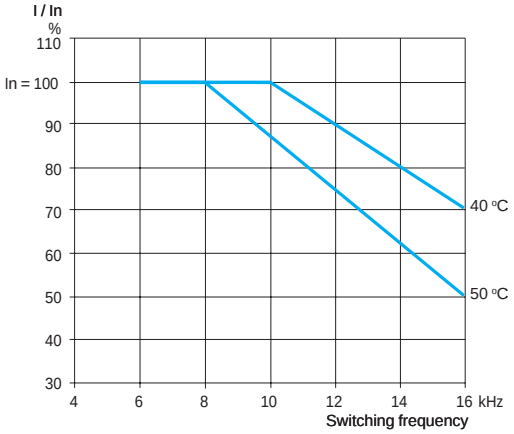

ATV 21WD45N4, ATV 21WD45N4C

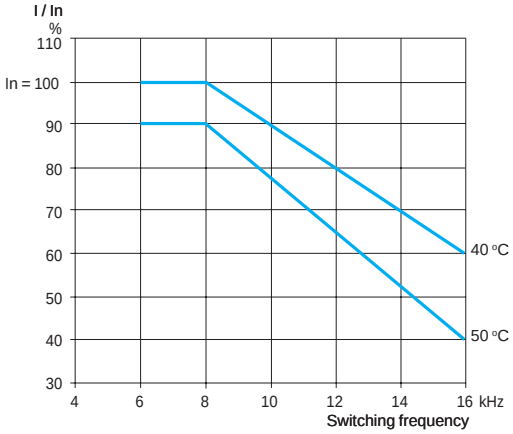

ATV 21WD55N4, ATV 21WD55N4C

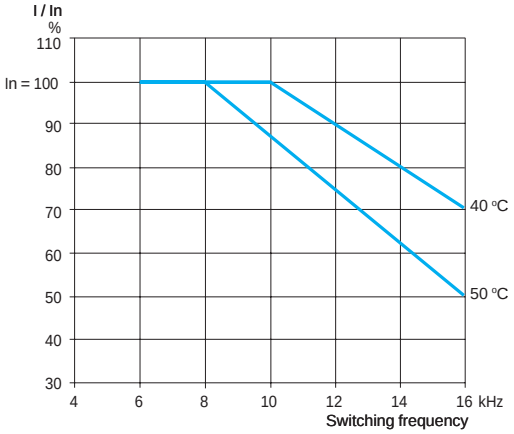

ATV 21WD75N4, ATV 21WD75N4C

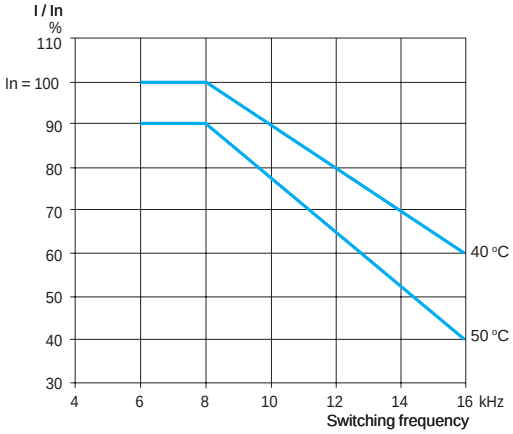

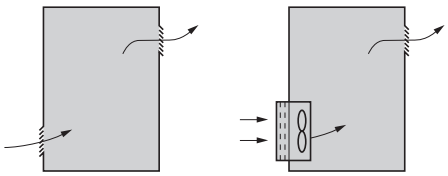

Specific recommendations for mounting in an enclosure *(1)*

Observe the mounting recommendations described on pages 44 to 49.
To ensure proper air circulation in the drive:
- Fit ventilation grilles.
- Ensure that there is sufficient ventilation. If there is not, install a forced ventilation unit with a filter. The openings and/or fans must provide a flow rate at least equal to that of the drive fans (see page 53).
- Use special filters with IP 54 protection.
- Remove the blanking cover from the top of the drive, see page 44.

Power dissipated inside the enclosure *(1)*

For drives	Dissipated power *(2)* W
Three-phase supply voltage: 200…240 V 50/60 Hz	
ATV 21H075M3X	63
ATV 21HU15M3X	101
ATV 21HU22M3X	120
ATV 21HU30M3X	146
ATV 21HU40M3X	193
ATV 21HU55M3X	249
ATV 21HU75M3X	346
ATV 21HD11M3X	459
ATV 21HD15M3X	629
ATV 21HD18M3X	698
ATV 21HD22M3X	763
ATV 21HD30M3X	1085
Three-phase supply voltage: 380…480 V 50/60 Hz	
ATV 21H075N4	55
ATV 21HU15N4	78
ATV 21HU22N4	103
ATV 21HU30N4	137
ATV 21HU40N4	176
ATV 21HU55N4	215
ATV 21HU75N4	291
ATV 21HD11N4	430
ATV 21HD15N4	625
ATV 21HD18N4	603
ATV 21HD22N4	626
ATV 21HD30N4	847
ATV 21HD37N4	976
ATV 21HD45N4	1253
ATV 21HD55N4	1455
ATV 21HD75N4	1945

(1) For ATV 21H●●●M3X and ATV 21H●●●N4 drives only.
(2) This value is given for operation at nominal load and for a switching frequency of 8 or 12 kHz depending on the rating.

Fan flow rate depending on the drive rating	
For drives	**Flow rate m³/hour**
ATV 21H075M3X	22
ATV 21HU15M3X	35
ATV 21HU22M3X	41
ATV 21HU30M3X	50
ATV 21HU40M3X	66
ATV 21HU55M3X	85
ATV 21HU75M3X	118
ATV 21HD11M3X	157
ATV 21HD15M3X	215
ATV 21HD18M3X	239
ATV 21HD22M3X	261
ATV 21HD30M3X	371
ATV 21H075N4	19
ATV 21HU15N4	27
ATV 21HU22N4	35
ATV 21HU30N4	47
ATV 21HU40N4	60
ATV 21HU55N4	74
ATV 21HU75N4	100
ATV 21HD11N4	147
ATV 21HD15N4	206
ATV 21HD18N4	214
ATV 21HD22N4	214
ATV 21HD30N4	290
ATV 21HD37N4	334
ATV 21HD45N4	429
ATV 21HD55N4	498
ATV 21HD75N4	666

Sealed metal enclosure (IP 54 degree of protection)

The drive must be mounted in a dust and damp proof enclosure in certain environmental conditions, such as dust, corrosive gases, high humidity with risk of condensation and dripping water, splashing liquid, etc.
This enables the drive to be used in an enclosure where the maximum internal temperature reaches 50°C.

Calculating the enclosure dimensions *(1)*

Maximum thermal resistance Rth (°C/W)

$$Rth = \frac{\theta - \theta e}{P}$$

θ = maximum temperature inside enclosure in °C
θe = maximum external temperature in °C
P = total power dissipated in the enclosure in W

Power dissipated by drive: see page 52.
Add the power dissipated by the other equipment components.

Useful heat dissipation surface of enclosure S (m²)

(sides + top + front panel if wall-mounted)

$$S = \frac{K}{Rth}$$

K = enclosure thermal resistance per m²

For a metal enclosure:
- K = 0.12 with internal fan
- K = 0.15 without fan

Note: *Do not use insulated enclosures, as they have a poor level of conductivity.*

(1) For ATV 21H●●●M3X and ATV 21H●●●N4 drives only.

Summary of functions

Integrated display terminal
Presentation page 56

Remote display terminal
Presentation page 56

Simplified start-up
Fan and centrifugal pump page 57
Quick Menu page 57

Operating modes
Default display mode page 58
Parameter setting mode page 58
Status monitoring mode page 58

Programming
Presentation page 59

Maintenance and diagnostics
Response to faults or alarms page 60
Fault log page 60
Identification of the software version page 60
Test functions page 60
Display of the I/O states page 60
Displaying equipment maintenance alarms page 60

Controlling the drive via its I/O
Presentation page 61

Functions designed specifically for pump and fan applications
Motor control profiles
- Energy saving ratio page 61
- Quadratic ratio (Kn^2) page 61

PID regulator
- Preset PID references page 61
- PID feedback page 62
- PID feedback supervision page 62
- Sleep/Wake-up page 62
- Alarms page 62
- Auto/Man. page 62

Forced operation page 62

Other application functions
2-wire control page 63
3-wire control page 63
Acceleration and deceleration ramps
- Time page 63
- Automatic adaptation page 63
- Switching page 64

Preset speeds page 64
Limiting low speed operating time page 65

Summary of functions (continued)

Other application functions (continued)

Motor control types	
- Sensorless flux vector control	page 65
- 2-point vector control	page 65
- Voltage/frequency ratio	page 65
- Synchronous motor	page 65
Auto-tuning	page 65
Switching frequency, noise reduction	page 65
+/- speed	
- Presentation	page 66
- Reference saving	page 66
Automatic catching of a spinning load with speed detection	page 66
Undervoltage management	page 67
Switching of 2 motor ratings	page 67
Current limit	page 68
Stop types	
- Freewheel stop	page 68
- Stop on ramp	page 68
- DC injection stop	page 68
Motor thermal protection	page 69
Drive thermal protection	page 70
IGBT thermal protection	page 70
Machine protection	page 70
Configuring the drive's fault response	page 70
Resetting resettable faults	page 71
General reset (inhibits all faults)	page 71
Automatic restart	page 71
PTC probe protection	page 72
IGBT testing	page 72
Resetting operating time to zero	page 72
External fault	page 72
Forced local mode	page 72

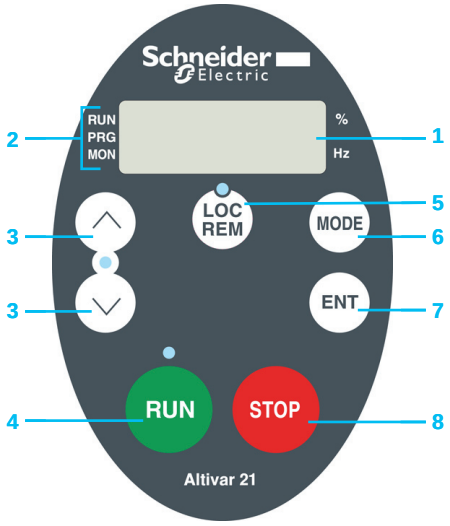

Integrated display terminal

Integrated display terminal

The Altivar 21 drive is equipped with an integrated display terminal. This can be used to:
- Display states and faults
- Access and modify parameters
- Check your installation easily in local mode using the Loc/Rem key **5**

Description

1 Display:
- Four 7-segment displays visible at 5 m
- Display of numeric values and codes
- The display flashes when a value is stored
- Unit rating of displayed value
- The display flashes to indicate a fault on the drive

2 Display of drive status:
- RUN: Run command is active or speed reference present
- PRG: Drive in programming mode
- MON: Drive in monitoring mode
- Loc: Drive in local mode

3 ∧ and ∨: Vertical navigation in the menu, editing of values or speed reference depending on the mode selected

4 RUN: Local motor run command; LED indicates that the RUN key is active

5 Loc/Rem: Switching of drive control to local or remote.
In "local" control, the speed reference can be modified using the ∧ and ∨ keys; the LED located between these keys lights up.

6 MODE: Selection of one of the following modes:
- Default display mode
- Adjustment mode
- Status monitoring mode

7 ENT: Saves the current value or the selected function

8 STOP: Local motor stop command, drive fault reset

Remote display terminal

A remote display terminal is available as an option. It can be mounted on an enclosure door and allows access to the same functions as the integrated display terminal.

It is also possible to download and store three configuration files using its COPY MODE (see page 21).

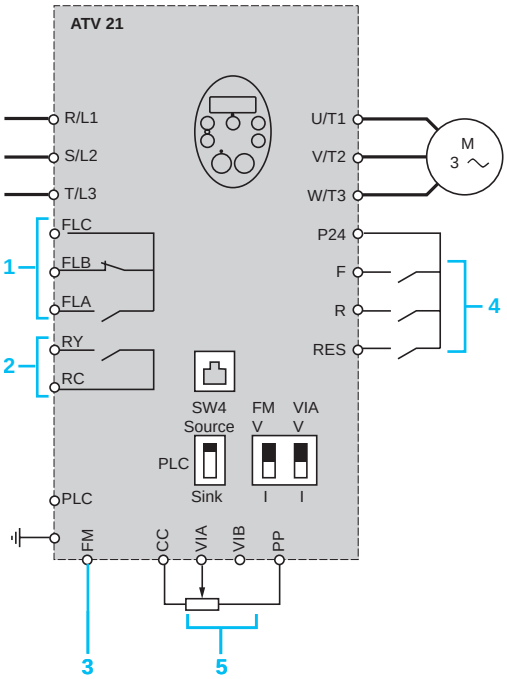

Factory-set configuration

Simplified start-up

Fan and centrifugal pump

The Altivar 21 drive is factory-configured to allow a simplified start-up, without the need for any adjustment.

The following conditions must be met to be able to use this simplified start-up function:

- ■ The drive load must be a fan or a centrifugal pump.
- ■ The motor rating must match the drive rating.
- ■ Connection must be in accordance with the diagram opposite:
- □ 1 FLA, FLB and FLC for the fault relay
- □ 2 RY and RC for the low speed reached relay
- □ 3 FM for the analog output
- □ 4 F, R and RES for the logic inputs:
  - F for forward operation
  - R for preset speed
  - RES for fault reset
- □ 5 VIA and VIB for the analog inputs:
  - VIA for the speed reference 0...10 V
  - VIB is not assigned

Quick Menu

The Quick Menu is used to:

- ■ Access the essential parameters of your application quickly
- ■ Enter the motor rating plate data (nominal voltage, nominal frequency, thermal current, etc.), so that the motor parameters can be adjusted quickly, thereby benefiting from optimum motor performance
- ■ Protect the motor by setting the drive's integrated electronic thermal overload relay

Parameters which can be accessed in the Quick Menu (AUF):

Parameter	Description
AU1	Automatic acceleration/deceleration
ACC	Acceleration
dEC	Deceleration
LL	Low speed
UL	High speed
tHr	Motor thermal current
FM	Analog output
Pt	U/F profile
uL	Nominal motor frequency
uLu	Nominal motor voltage

Operating modes

The Altivar 21 drive has the following operating modes:
- Default display mode
- Parameter setting mode
- Status monitoring mode

It is easy to switch between these different modes simply by using the MODE key:

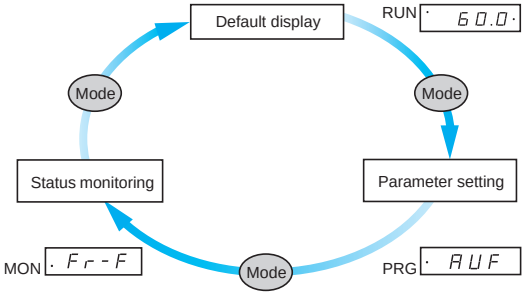

Default display mode

This mode is automatically activated when the drive is switched on.
It is used to display a drive variable (current, speed, etc.), alarms and faults.

Parameter setting mode

This mode provides a simple start-up function for the drive via direct access to the standard parameters:
- Acceleration
- Deceleration
- Macro-configuration
- Control mode
- Motor rating plate
- Etc.

The standard parameters are identified by an alphanumerical code (ACC, dEC, etc.).

This mode also provides access to the advanced parameters required for setting up and optimizing advanced functions.
These parameters are identified by a numerical code (F100 to F900).

Status monitoring mode

This mode is used to display all the drive variables, such as the I/O state, most recent faults, etc.

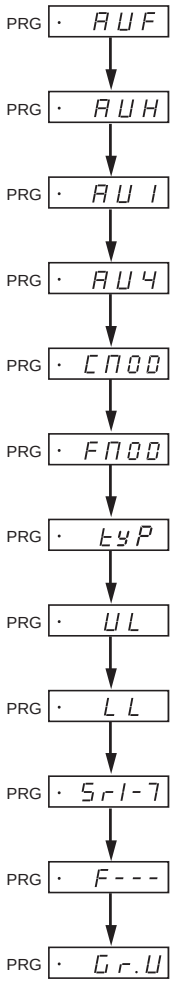

Main menus on the integrated display terminal

Programming

The main menus accessible from the integrated display terminal are described in the table below:

Menu	Function
AUF	Accessing the Quick Menu
AUH	Accessing the most recently modified parameters
AU1	Selecting the ramp type (fixed or automatically adapted)
AU4	Selecting the macro-configurations
CMOD	Selecting the command channel
FMOD	Selecting the reference channel
tyP	Selecting the factory settings or the customer configuration
UL	Setting high speed
LL	Setting low speed
Sr1-7	Accessing preset speeds
F---	Accessing advanced parameters
Gr.U	Accessing parameters that are different to the factory settings

Maintenance and diagnostics

New functions have been added to the Altivar 21 drive to ensure quick and simple maintenance, ultimately boosting productivity:

■ **Response to faults or alarms**
It is possible to use the alarm management or drive operation configuration functions to take corrective actions before stopping the machine.

■ **Fault log**
As soon as the fault occurs, values such as speed, current, thermal state, timer are saved and restored in the fault log.
The last 4 faults are stored.

■ **Identification of the software version**
It is possible to display the relevant serial numbers and software versions, thereby helping to manage the equipment base.

■ **Test functions**
The Altivar 21 drive includes the following test functions:
□ Identifying any motor short-circuit before start-up
□ Running, via the integrated display terminal,
the remote display terminal or PC software, automatic procedures during maintenance operations aimed at testing:
- The motor
- The drive power components

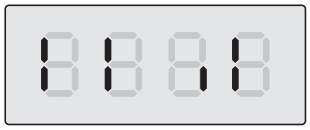

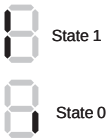

Example of the I/O state display

■ **Display of the I/O states**
It is possible to display the activation or deactivation state of each input/output.
1 VIA: State 1
2 RES: State 1
3 R: State 0
4 F: State 1

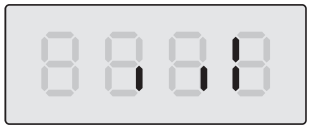

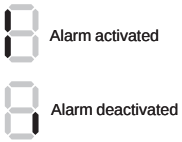

Example of alarms display

■ **Displaying equipment maintenance alarms**
Three alarms show if it is necessary to replace the drive or some of its components.

The drive automatically calculates their service lives by configuring their average annual operating temperature.
1 Drive: Alarm deactivated
2 Capacitor: Alarm deactivated
3 Fan: Alarm activated

Controlling the drive via its I/O

Control signals are transmitted via cable to the I/O. Functions are assigned to logic inputs, analog inputs, etc.
A logic input can be assigned to more than one function. This means that two functions can be controlled using a single signal, thereby limiting the number of inputs required.

The Altivar 21 drive I/O can be configured independently from each other. For instance:
□ A time delay can be applied to taking account of the logic inputs, so as to avoid any bounce-back from certain switches.
□ Transforming incoming signals on the analog inputs can help the drive fully adapt to the control devices and applications:
- Minimum and maximum values for the input signal
- Input filtering in order to eliminate unwanted interference from the signals received
- Magnifying glass effect by delinearizing the input signal in order to increase the precision with low amplitude signals
- “Pedestal” and “Deadband” functions for signals in order to prevent low speed operations which can have an adverse effect on the application
□ Transforming analog outputs which transfer information sent by the drive to other devices (display units, drives, PLCs, etc.):
- Voltage or current output signal
- Minimum and maximum values for the output signal
- Output signal filtering

Logic outputs can be delayed on activation and deactivation. The output state can also be configured when the signal is active.

Functions designed specifically for pump and fan applications

■ **Motor control profiles**

□ **Energy saving ratio**
This control type makes it possible to optimize the energy consumed according to the load applied to the machine.

□ **Quadratic ratio (Kn²)**
This control type is optimized for centrifugal pumps and fans.

■ **PID regulator**
This is used to regulate a process with a reference and feedback provided by a sensor.
Function suitable for regulation in buildings.

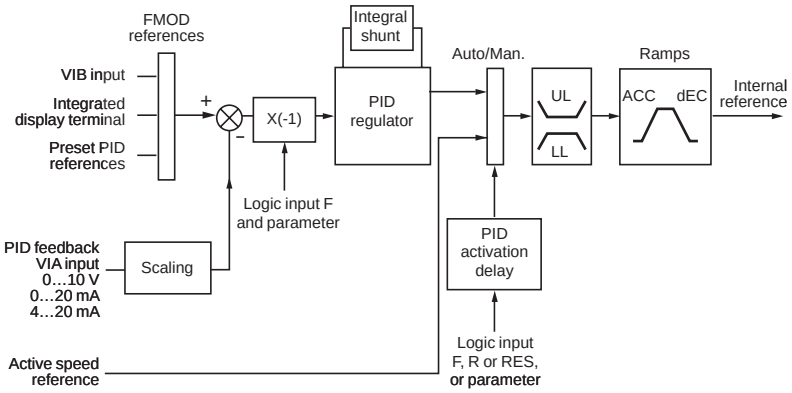

ACC: Acceleration; dEC: Deceleration; LL: Low speed; UL: High speed

□ **Preset PID references**
2 to 7 PID references are available.

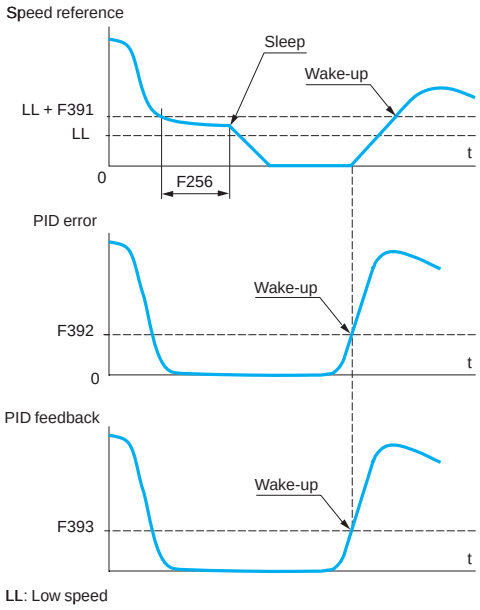

Example of the "sleep/wake-up" function in operation

■ **PID regulator (continued)**

□ **PID feedback**

PID feedback can be assigned to the VIA analog input. It can also be transmitted by a communication network (network AI).

The following four functions can be used in combination with the PID regulator:

□ **PID feedback supervision**

□ **Sleep/Wake-up**

This function supplements the PID regulator, in order to avoid prolonged operation at excessively low speeds when neither useful nor desirable.
It stops the motor after a period of operation at reduced speed. This duration (parameter F256) and speed (parameter LL) can be adjusted.
It restarts the motor if the speed reference, PID error or PID feedback exceeds an adjustable threshold:
- Speed reference greater than parameter LL + parameter F391
- PID error greater than parameter F392
- PID feedback greater than parameter F393

□ **Alarms**

Minimum and maximum PID regulator feedback monitoring thresholds and PID regulator error monitoring threshold.

□ **Auto/Man.**

This can be used to switch from speed regulation mode (Man.) to PID regulation mode (Auto). A logic input or control word bit is used for switching.

Speed regulation mode (Man.)

The manual reference is transmitted via the terminals (analog inputs, preset speeds, etc.).
With manual switching, the speed reference changes according to the ACC and dEC ramp times.

PID regulation mode (Auto)

In automatic mode it is possible to:
- Adapt the references and feedback to the process (transformation)
- Adjust the proportional, integral and derivative gains
- Shunt the integral
- Use the "alarm" on the logic output or display it on the integrated display terminal or the remote display terminal, if the threshold is exceeded (Max. feedback, Min. feedback and PID error)
- Display the PID reference, PID feedback, PID error and PID output on the display terminal and assign them an analog output
- Apply a ramp to the PID output

The motor speed is limited to low speed (LL) and high speed (UL).

■ **Forced operation**

Combined with the inhibit all faults function, this function makes it possible to force the running order in a particular direction and the reference to a configured value.

Other application functions

■ 2-wire control

This function is used to control the direction of operation by means of a stay-put contact.
It is enabled by means of 1 or 2 logic inputs (non-reversing and preset speed).

This function is suitable for all non-reversing applications, by detection of the logic input state.

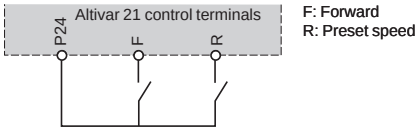

Wiring diagram for 2-wire control

■ 3-wire control

This function is used to control the operating direction and stopping by means of a pulsed contact.
It is enabled by means of 2 or 3 logic inputs.

This function is suitable for all non-reversing applications with stopping.

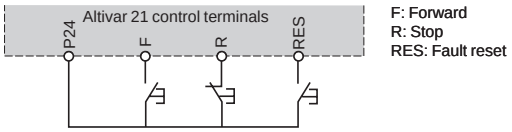

Wiring diagram for 3-wire control

■ Ramps

□ Acceleration and deceleration ramp times

This function is used to define acceleration and deceleration ramp times according to the application and the machine dynamics.

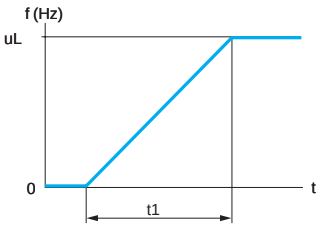

Linear acceleration ramp

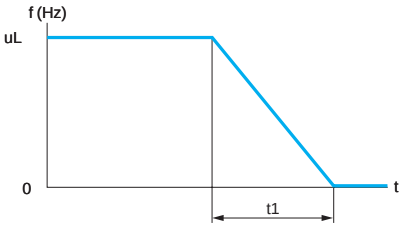

Linear deceleration ramp

uL: Nominal motor frequency
t1: Acceleration time
t2: Deceleration time
t1 and t2 can be set independently from 0.01 to 3200 s (according to one of the following ramp increments: 0.01 s; 0.1 s or 1 s);
Factory setting: 10 s

□ Automatic adaptation of acceleration and deceleration ramps

This function can be used to adapt the acceleration and deceleration ramps automatically according to the load.
The acceleration and deceleration times are reduced for low loads and increased for high loads.

Low load

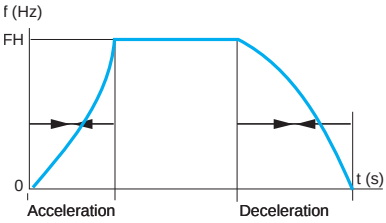

FH: Maximum output frequency

High load

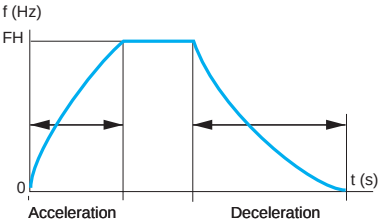

FH: Maximum output frequency

■ **Ramps (continued)**
□ **Ramp switching**
This function is used to switch two acceleration and deceleration ramp times, which can be set separately.
Ramp switching can be enabled by:
- A logic input
- A frequency threshold
- A control word bit

This function is suitable for all machines with fast steady state speed correction.

■ **Preset speeds**
This function is used to switch preset speed references.
Choice of seven preset speeds.
Enabled by logic inputs, R and RES, and by VIA configured as a logic input.
The preset speeds are adjustable in increments of 0.1 Hz, from low speed to high speed.

This function is suitable for machines with several operating speeds.

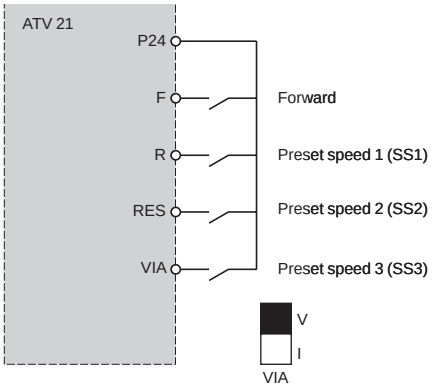

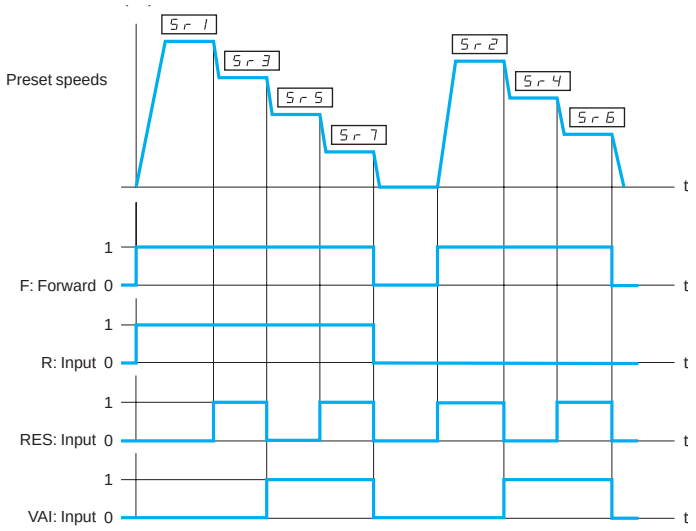

Example of operation with 7 preset speeds

■ **Limiting low speed operating time**
The motor is stopped automatically after a period of operation at low speed (LL) with a zero reference and a run command present.
This time can be set between 0.1 and 600 seconds (0 corresponds to an unlimited time). Factory setting 0 s. The motor restarts automatically on the ramp when the reference reappears or if the run command is interrupted and then re-established.

This function is suitable for automatic stops/starts.

■ **Motor control types**
□ **Sensorless flux vector control**
This control type can be used with a single motor or motors connected in parallel.

□ **2-point vector control**
The zone for operating at constant power can be optimized by defining an additional point in the control profile.
This function should be used with motors offering a two-part defluxing zone.
It can be used to limit the voltage at the motor terminals when the motor is being powered by a high line supply.

□ **Voltage/frequency ratio**
This control type is particularly suitable for special motors (high-speed motors, synchronized asynchronous motors, etc.). The ratio can be adjusted by 2 points and used to achieve output frequencies of up to 200 Hz.

□ **Synchronous motor**
This control type is exclusively reserved for controlling open loop permanent magnet synchronous motors with sinusoidal electromotive force (EMF).

■ **Auto-tuning**
Auto-tuning can be performed:
□ Using a dialogue tool (integrated display terminal, remote display terminal or PC software)
□ Via a communication network

■ **Switching frequency, noise reduction**
The switching frequency setting permits a reduction in the noise generated by the motor for any application requiring a low level of noise.
The switching frequency is modulated randomly in order to avoid resonance. This function can be disabled if it causes instability.
Switching the intermediate DC voltage at high frequency is useful for supplying the motor with a current wave having little harmonic distortion.
The switching frequency is adjustable during operation to reduce the noise generated by the motor.
Value: 6 to 16 kHz

■ **+/- speed**
This function is used to increase or decrease a speed reference by means of one or two logic inputs, with or without the last reference being saved (motorized potentiometer function).
This function is suitable for centralized control of a machine with several sections operating in one direction.

Two logic inputs are required in addition to the operating direction to create the +/- speed command.

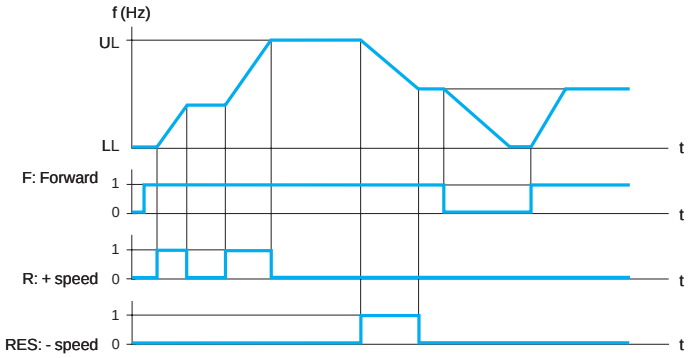

LL: Low speed; UL: High speed

□ Reference saving
This function is associated with the +/- speed command.
This can be used for reading and saving the last speed reference prior to the loss of the run command or line supply. The saved reference is applied the next time a run command is received.

■ **Automatic catching a spinning load with speed detection** (“catch on the fly”)
This function is used to restart the motor smoothly after one of the following events, provided the run command is still present:
□ Loss of line supply or simple power off
□ Fault reset or automatic restart
□ Freewheel stop

On disappearance of the event, the rms speed of the motor is detected in order to restart on a ramp from this speed and return to the reference speed. The speed detection time can reach 0.5 s.

This function is suitable for machines for which the motor speed loss is negligible during a power failure (high-inertia machines such as centrifuges, etc.).

■ **Undervoltage management**
Depending on the application, it is possible to configure the Altivar 21's response to undervoltages or power failures.
If the drive locks as a result, management of the fault relay can be configured (open or not). If the fault relay does not open an alarm is shown.

The Altivar 21 drive can also be configured to prevent the drive locking (with an alarm):
□ Controlled stop according to the type of stop configured
□ Deceleration based on a ramp which it automatically adapts to maintain the DC bus voltage, thereby preventing the drive from locking in fault mode
□ Instant IGBT (inverter bridge) loss followed by power supplied to the motor as soon as the line voltage has reappeared. This function can be used to prevent the Altivar 21 drive being reinitialized.

■ **Switching between two sets of motor rating data**
This function is used to switch two sets of 10 motor parameters:
□ All or some of the motor parameters can be switched on stopping
□ Some of these parameters can be switched during operation
A logic input or control word bit is used to switch the sets.

Command and reference switching via logic input
This function is used to switch commands (terminal, logic inputs) and references (speed, PID, etc.) via a logic input.

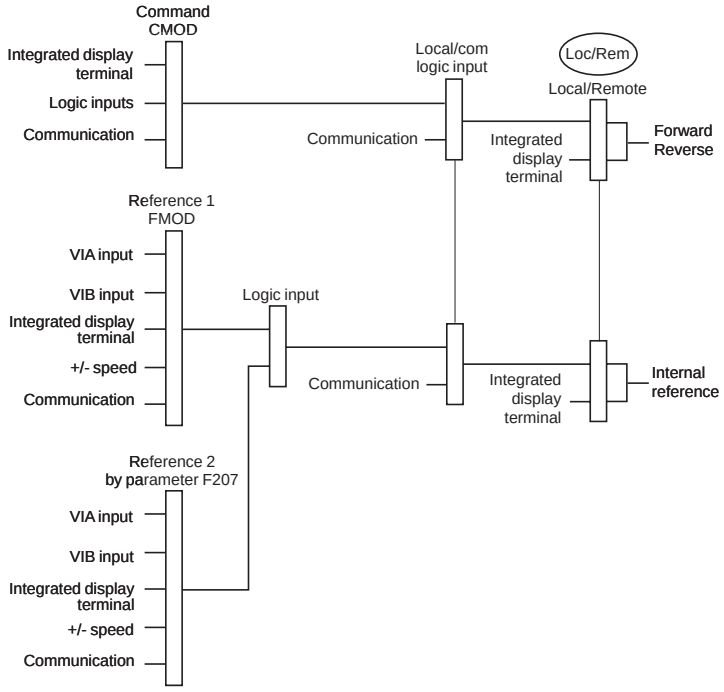

Example of command and reference switching

■ **Current limit**
A second current limit can be configured up to 1.1 times the drive nominal current and it can be used to limit the rise in motor temperature and the torque.
Switching between the two current limits can be enabled via:
□ A logic input
□ A control word bit

■ **Stop types**
□ **Freewheel stop**
This stops the motor by resistive torque if the motor power supply is cut.

A freewheel stop is achieved:
- By configuring a normal stop command as a freewheel stop (on disappearance of a run command or appearance of a stop command)
- By enabling a logic input
- By activating a control word bit

□ **Stop on ramp**
This stops the motor according to the deceleration ramp.
A stop on ramp is achieved:
- By enabling a logic input
- By activating a control word bit

□ **DC injection stop**
This is used to brake high-inertia machines at low speed or maintain torque on stopping.
A DC injection stop is achieved:
- By configuring a normal stop as a DC injection stop (on disappearance of a run command or appearance of a stop command)
- By enabling a logic input
- By activating a control word bit

The DC value and the standstill braking time are adjustable.

■ **Motor thermal protection**

Motor thermal protection is provided by the drive:
□ Directly, through PTC probes located in the motor windings
□ Indirectly, via the integrated thermal relay. Indirect thermal protection is implemented via continuous calculation of its theoretical temperature rise.

The microprocessor calculates the theoretical temperature rise of the motor based on various elements:
□ The operating frequency
□ The current taken by the motor
□ The operating time
□ The maximum ambient temperature around the motor (40°C)
□ The type of motor ventilation (self-cooled or force-cooled)

Thermal protection is adjustable from 0.5 to 1.1 times the nominal current, depending on the drive type. It must be set to the nominal current indicated on the motor rating plate.

Note: *The motor thermal state memory returns to zero when the drive control section is switched off.*

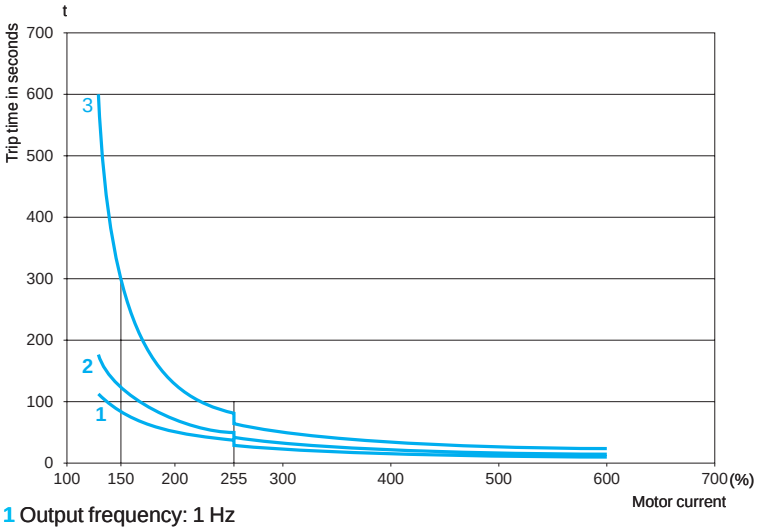

1 Output frequency: 1 Hz
2 Output frequency: 10 Hz
3 Output frequency: 30 Hz and above

Motor thermal protection curves

□ Self-cooled motors:
The tripping curves vary with the motor frequency.

□ Force-cooled motors:
Only the 30 Hz and higher tripping curve should be considered, whatever the motor frequency.

■ **Drive thermal protection**
The drive thermal protection is provided by a PTC probe mounted on the heatsink or integrated in the power module.

■ **IGBT thermal protection**
The drive manages the switching frequency intelligently according to the IGBT temperature.
If the drive's current rating is exceeded (for example, if the current is higher than the nominal drive current for a zero stator frequency), an alarm is displayed and a timer increases for as long the alarm is present.

■ **Machine protection**
This is used to detect an under- and/or overload.

■ **Configuring the drive's fault response (fault management)**
Different responses can be configured for the drive in the event of a resettable fault occurring:
- ◻ Freewheel stop
- ◻ The drive switches to the fallback speed
- ◻ The drive maintains the speed at which it was operating when the fault occurred until the fault disappears
- ◻ Stop on ramp
- ◻ DC injection stop
- ◻ No stop (alarm activated)

List of resettable faults:
- ◻ PTC probe
- ◻ Drive overheating
- ◻ Motor overload if the thermal state is less than 100%
- ◻ Line overvoltage
- ◻ Current limit
- ◻ IGBT overheating
- ◻ Communication faults (Modbus and other communication networks)

■ **Resetting resettable faults**
This can be used to remove the last fault using a logic input, control word bit or the STOP/RESET key on the display terminal.
The restart conditions after a reset are the same as those of a normal power-up.
For a list of resettable faults, see page 70 “Configuring the drive’s fault response”.
Line supply undervoltage and input phase loss faults are reset automatically when the line supply is restored.

This function is suitable for applications where drives are difficult to access, such as when a drive is placed on a moving part.

■ **General reset (inhibits all faults)**
This function inhibits all faults, including thermal protection (forced operation), and can lead to the destruction of the drive.

This function is suitable for applications where restarting is vital (smoke extraction system, machines with hardening products that need to be removed).
The function is enabled by a logic input.

Fault monitoring is active if the logic input is at state 1.
All faults are reset on a change of state ↑ of the logic input.
Note: *Use of this function invalidates the product guarantee.*

■ **Automatic restart**
This function enables the drive to be restarted automatically after it has locked in fault mode, provided the fault has disappeared and the other operating conditions permit a restart.
This restart is performed by a series of automatic attempts separated by increasingly long waiting periods of 1, 2, 3 s, then 10 s, up to the 10th attempt.
If the drive has not restarted after the configured time, it will lock and the procedure is abandoned until the power has been cycled off/on.

The faults which permit this type of restart are:
- ◻ Line overvoltage
- ◻ Motor thermal overload
- ◻ Drive thermal overload
- ◻ DC bus overvoltage
- ◻ PTC probes
- ◻ Current limit
- ◻ Line voltage too low (For this fault, the function is always active, even if it is not configured.)
- ◻ PI supervision
- ◻ Fault caused by Modbus or other communication networks. These faults are reset automatically as soon as the control word or frequency reference is sent to the drive. For these types of fault, the relay configured as a fault relay remains activated if the function is configured. The speed reference and direction of operation must be maintained for this function.

This function is suitable for machines or installations which are in continuous operation or are not monitored, and where a restart will not endanger equipment or personnel in any way.

■ **PTC probe protection**
The probes can be connected directly to the drive control card or to the communication cards.
The way in which a temperature fault is recorded by the drive can be configured as a fault or as an alarm.

■ **IGBT testing**
When enabled, this function tests every IGBT and the motor connections in order to detect a short-circuit or an open circuit. This test is run every time the drive is powered on and before each motor start.

■ **Resetting operating time to zero**
The drive operating and power-on time can be reset.

■ **External fault**
This function can lead to the drive locking if a fault occurs in the machine. This fault is flagged on the drive display unit. The fault is flagged if the signal is at 1 or at 0, according to the function configuration.

■ **Forced local mode**
Forced local mode imposes enabling of the command via the logic input and inhibits all other control modes.
Switching to forced local mode may be activated via:
- ◻ A logic input
- ◻ A function key on the display terminal

The following references and commands are available for forced local mode:
- ◻ References VIA, VIB, etc. and command via logic inputs
- ◻ Reference and command via the display terminal

Function compatibility table

■ **Configurable I/O**

The table below lists the incompatibilities between the functions and shows the priority functions.
Stop functions have priority over run commands.
The choice of functions is limited by:
- ◻ The number of drive I/O which can be reassigned
- ◻ The incompatibility of certain functions with one another

Functions	PID regulator	Preset speeds	+/- speed	Freewheel stop	DC injection stop	Forced operation
PID regulator			⊖			↑
Preset speeds			⊖			↑
+/- speed	⊖	⊖				⊖
Freewheel stop					←	↑
DC injection stop				↑		⊖
Forced operation	←	←	⊖	←	⊖	

⊖ Incompatible functions

Compatible functions

Not applicable

Priority functions (functions which cannot be active at the same time)

← The arrow indicates which function has priority.
For example, the Freewheel stop function has priority over the DC injection stop function.