Manual No.
TOEP-C71080603-01-OY

JUNMA SERIES SERVO DRIVE

Mechatrolink-II communications type
Model: SJDE- □□ANA-OY

USER´S MANUAL

Copyright © 2006 YASKAWA ELECTRIC CORPORATION

All rights reserved. No part of this publication may be reproduced, stored in a retrieval system, or transmitted, in any form, or by any means, mechanical, electronic, photocopying, recording, or otherwise, without the prior written permission of Yaskawa. No patent liability is assumed with respect to the use of the information contained herein. Moreover, because Yaskawa is constantly striving to improve its high-quality products, the information contained in this manual is subject to change without notice. Every precaution has been taken in the preparation of this manual. Nevertheless, Yaskawa assumes no responsibility for errors or omissions. Neither is any liability assumed for damages resulting from the use of the information contained in this publication.

Introduction

This instruction manual describes the JUNMA series AC SERVOPACKs. To properly use the JUNMA series AC SERVOPACKs, read these instructions thoroughly and retain for easy reference for inspections, maintenance, and so on. Make sure that the end user receives this manual.

Related Manuals

Refer to the following manuals as required.

Manual Name	Manual Number
JUNMA series AC SERVOMOTOR INSTRUCTIONS	TOMPC23026100 or TOEPC23026101

Safety Information

The following conventions are used to indicate precautions in this manual. Failure to heed these precautions can result in serious or possibly even fatal injury or damage to the products or to related equipment and systems.

⚠ WARNING — Indicates precautions that, if not heeded, could possibly result in loss of life or serious injury.

⚠ CAUTION — Indicates precautions that, if not heeded, could result in relatively serious or minor injury, damage to the product, or faulty operation.

In some situations, the precautions indicated could have serious consequences if not heeded.

PROHIBITED — Indicates prohibited actions that must not be performed. For example, this symbol would be used as follows to indicate that fire is prohibited: .

MANDATORY — Indicates compulsory actions that must be performed. For example, this symbol would be used as follows to indicate that grounding is compulsory: .

Visual Aids

The following aids are used to indicate certain types of information for easier reference.

IMPORTANT
- Indicates important information that should be memorized, including precautions such as alarm displays to avoid damaging the devices.

INFO
- Indicates supplemental information.

Trademarks

MECHATROLINK is a trademark of the MECHATROLINK Members Association.

Notes for Safe Operation

Read these instructions thoroughly before checking products on delivery, storage and transportation, installation, wiring, operation and inspection, and disposal of the AC SERVOPACK.

⚠ WARNING

- Be sure to correctly connect the SERVOPACK connectors.

  Incorrect wiring may result in electric shock, fire, or damage to the equipment. For the wiring method, refer to *3.4 Main Circuit Wiring*.

- Use the emergency stop signal input E-STP to forcibly turn OFF the servo from an external sequence, such as host controller, at occurrence of servo alarm or system emergency stop.

  The residual voltage rotates the servomotor for a few seconds after the power supply has been turned OFF, and may result in injury or damage to the equipment. Be sure to completely stop the motor by turning OFF the servo using the emergency stop.

- Configure the circuit's power supply to be automatically cut off if E-STP signal is OFF at occurrence of emergency stop

  The residual voltage rotates the servomotor for a few seconds after the power supply has been turned OFF, and may result in injury or damage to the equipment. Be sure to completely stop the motor by turning OFF the servo using the emergency stop.
  Position information is not stored in the SERVOPACK, so this information will be lost if the power supply is turned OFF. This information cannot be read again if the power supply is turned OFF.

- Never touch any rotating motor parts while the motor is running.

  Failure to observe this warning may result in injury.

- Before starting operation with a machine connected, make sure that an emergency stop can be applied at any time. Also, configure the circuit's power supply to be automatically cut off if E-STP signal is OFF at occurrence of emergency stop.

  Failure to observe this warning may result in injury.

- Never touch the inside of the SERVOPACK.

  Failure to observe this warning may result in electric shock.

- Do not touch terminals for five minutes after the power is turned OFF.

  Residual voltage may cause electric shock.

- Follow the procedures and instructions for trial operation precisely as described in this manual.

  Malfunctions that occur after the servomotor is connected to the equipment not only damage the equipment, but may also cause an accident resulting in death or injury.

- Do not remove cables, connectors, or optional items while the power is ON.

  Failure to observe this warning may result in electric shock.

- Installation, wiring, advice on inspection and malfunction must be performed only by authorized personnel.

  Failure to observe this warning may result in fire, electric shock, or injury.

- Do not damage, press, exert excessive force or place heavy objects on the cables or the cables between other objects where they might be pinched.

  Failure to observe this warning may result in electric shock, stopping operation of the product, or burning.

⚠ WARNING

- Provide an appropriate stopping device on the machine side to ensure safety.
  A holding brake for a servomotor with brake is not a stopping device for ensuring safety. Failure to observe this warning may result in injury.
- Do not come close to the machine immediately after resetting momentary power loss to avoid an unexpected restart.
  Take appropriate measures to ensure safety against an unexpected restart. Failure to observe this warning may result in injury.
- Never modify the product.
  Failure to observe this warning may result in injury or damage to the product.
- Be sure to correctly ground the SERVOPACK and the servomotor.
- Connect the SERVOPACK's ground terminal to electrical codes (ground resistance: 100 Ω or less).
  Improper grounding may result in electric shock.

■ Checking on Delivery

⚠ CAUTION

- Always use the servomotor and SERVOPACK in one of the specified combinations.
  Failure to observe this caution may result in fire or malfunction.

■ Storage and Transportation

⚠ CAUTION

- Do not store or install the product in the following places.
  Failure to observe this caution may result in damage to the product.
  - Locations subject to direct sunlight.
  - Locations subject to temperatures outside the range specified in the storage or installation temperature conditions.
  - Locations subject to humidity outside the range specified in the storage or installation humidity conditions.
  - Locations subject to condensation as the result of extreme changes in temperature.
  - Locations subject to corrosive or flammable gases.
  - Locations subject to dust, salts, or iron dust.
  - Locations subject to exposure to water, oil, or chemicals.
  - Locations subject to shock or vibration.
- Do not hold the product by the cables or motor shaft while transporting it.
  Failure to observe this caution may result in injury or malfunction.
- Do not place any load exceeding the limit specified on the packing box.
  Failure to observe this caution may result in injury or malfunction.

■ Installation

⚠ CAUTION
• Make sure to follow the conditions on *2.1 Installation Conditions*. Failure to observe this caution may result in electric shock, fire, or SERVOPACK's malfunction.
• Do not step on or place a heavy object on the product. Failure to observe this caution may result in injury.
• Do not cover the inlet or outlet parts of the SERVOPACK and prevent any foreign objects, such as metallic fragment, or combustibles from entering the product. Failure to observe this caution may cause internal elements to deteriorate resulting in malfunction or fire.
• Be sure to install the product in the correct direction. Failure to observe this caution may result in malfunction.
• Provide the specified clearances between the SERVOPACK and the control panel or with other devices. Failure to observe this caution may result in fire or malfunction.
• SERVOPACK and servomotor are precision equipment. Do not apply any strong impact. Failure to observe this caution may result in malfunction.

■ Wiring

⚠ WARNING

- Be sure to correctly ground the SERVOPACK and the servomotor.
- Wiring must be performed by an authorized person qualified in electrical work.
- When using the servomotor for a vertical axis, install safety devices to prevent workpieces from falling off because of alarms. Workpiece's falling off may result in injury or malfunction.
- Configure the interlock circuit so that the system is interlocked to avoid injury whenever the protective cover on the machine is opened or closed.
- Use the emergency stop signal input E-STP to forcibly turn OFF the servo from an external sequence, such as host controller, at occurrence of servo alarm or system emergency stop.

  The residual voltage rotates the servomotor for a few seconds after the power supply has been turned OFF, and may result in injury or damage to the equipment. Be sure to completely stop the motor by turning OFF the servo using the emergency stop.
- When executing the JOG operation and the home position search operation using CX-Drive, the E-STP signal will be ignored. Alternative measures must be taken in case an emergency stop is needed.
- Configure the circuit's power supply to be automatically cut off if E-STP signal is OFF at occurrence of emergency stop.

  The residual voltage rotates the servomotor for a few seconds after the power supply has been turned OFF, and may result in injury or damage to the equipment.

  Position information is not stored in the SERVOPACK, so this information will be lost if the power supply is turned OFF. This information cannot be read again if the power supply is turned OFF.
- When executing JOG operation and the home position search operation using CX-Drive, the P-OT and N-OT signals will be ignored. Alternative measures must be taken in case of overtravel.

⚠ CAUTION

- Do not connect a three-phase power supply to the U, V, or W output terminals.

  Failure to observe this caution may result in injury or fire.

- Securely connect the power supply terminals, regenerative unit connection terminal, and motor main circuit cable terminals.

  Failure to observe this caution may result in fire.

- Do not bundle or run power and signal lines together in the same duct. Keep power and signal lines separated by at least 300 mm. (11.81 in).

  Failure to observe this caution may result in malfunction.

- Use twisted-pair shielded wires or multi-core twisted pair shielded wires for I/O signal cable and encoder cable.

  The maximum length is 3 m (118.11 in) for I/O signal cable and is 20 m (787.40 in) for encoder cable.

- Do not touch the power terminals for five minutes after turning the power supply LED (PWR) are OFF because high voltage may still remain in the SERVOPACK.

- Avoid frequently turning power ON and OFF. Do not turn power ON or OFF more than once per minute.

  Since the SERVOPACK has a capacitor in the power supply, a high charging current flows when power is turned ON. Frequently turning power ON and OFF causes main power devices such as capacitors and fuses to deteriorate, resulting in unexpected problems.

- Observe the following precautions when wiring connector for power supply/regenerative unit.
  - Remove the connector for power supply/regenerative unit from the SERVOPACK prior to wiring.
  - Insert only one wire per terminal on the connector for power supply/regenerative unit.
  - Make sure that the core wire is not electrically shorted to adjacent core wires.

- Be sure to wire correctly and securely.

  Failure to observe this caution may result in motor overrun, injury, or malfunction.

- Always use the specified power supply voltage of single-phase 200 V to 230 V without connecting directly to the power supply of 400 V.

  The SERVOPACK will be destroyed.

- Take appropriate measures to ensure that the input power supply is supplied within the specified voltage fluctuation range.

  An incorrect power supply may result in damage to the product.

- Install external breakers or other safety devices against short-circuit in external wiring.

  Failure to observe this caution may result in fire.

- Take appropriate and sufficient countermeasures for each when installing systems in the following locations.

  Failure to observe this caution may result in damage to the product.
  - Locations subject to static electricity or other forms of noise.
  - Locations subject to strong electromagnetic fields and magnetic fields.
  - Locations subject to possible exposure to radioactivity.
  - Locations close to power supplies, including power supply lines.

- Do not reverse the polarity of the battery when wiring with regenerative unit.

  Failure to observe this caution may result in damage to the product.

■ Operation

⚠ CAUTION
• Conduct trial operation on the servomotor alone with the motor shaft disconnected from machine to avoid any unexpected accidents. Failure to observe this caution may result in injury.
• During the JOG operation and the home position search operation using CX-Drive, the forward run prohibited (P-OT), reverse run prohibited (N-OT), and emergency stop (E-STP) signals will be ignored. Alternative measures must be taken in case of overtravel and emergency stop.
• When using the servomotor for a vertical axis, install safety devices to prevent workpieces from falling off because of alarms. Workpiece's falling off may result in injury or malfunction.
• Do not touch the SERVOPACK heat sinks, regenerative unit, or servomotor while power is ON or soon after the power is turned OFF. Failure to observe this caution may result in burns due to high temperatures.
• When an alarm occurs, remove the cause, turn OFF the power and ON again after confirming safety, and then resume operation. Failure to observe this caution may result in injury.
• Do not use the holding brake of the servomotor for ordinary braking. Failure to observe this caution may result in malfunction.

■ Maintenance and Inspection

⚠ CAUTION
• Do not open the SERVOPACK case for 5 minutes after the power supply indicator (PWR LED) goes out. High voltage may remain in the SERVOPACK after the power supply has been turned OFF.
• After turning OFF the power supply, wait 15 minutes before replacing the cooling fan. Failure to observe this caution may result in burns because the heat sink is hot.
• Mount the cooling fan in the correct way explained in *9.3 Replacement of Cooling Fan.* Improper mounting may result in the breakdown of the SERVOPACK.
• Do not attempt to change wiring while the power is ON. Failure to observe this caution may result in electric shock or injury.
• Do not touch the SERVOPACK heat sinks, regenerative unit, or servomotor while power is ON or soon after the power is turned OFF.

■ Disposal

⚠ CAUTION
• When disposing of the products, treat them as general industrial waste.

■ General Precautions

Note the following to ensure safe application.
• The drawings presented in this manual are sometimes shown without covers or protective guards. Always replace the cover or protective guard as specified first, and then operate the products in accordance with the manual. • The drawings presented in this manual are typical examples and may not match the product you received. • This manual is subject to change due to product improvement, specification modification, and manual improvement. When this manual is revised, the manual code is updated and the new manual is published as a next edition. • If the manual must be ordered due to loss or damage, inform your nearest Omron Yaskawa representative or one of the offices listed on the back of this manual. • Omron Yaskawa will not take responsibility for the results of unauthorized modifications of this product. Omron Yaskawa shall not be liable for any damages or troubles resulting from unauthorized modification.

CONTENTS

Introduction - - -

3.4.7 Wiring the Personal Computer Connector (CN9) - 43
3.5 Connection Examples of Input Signal - 44
3.6 Connection Example of Output Signal- 45
3.7 I/O Signals - 46
3.7.1 Homing Deceleration Signal Input - 46
3.7.2 External Latch Signal Input - 46
3.7.3 Emergency Stop Signal Input - 47
3.7.4 Forward/Reverse Run Prohibited Inputs (Overtravel Inputs) - - - - - - - - - - - - - - - - - - 49
3.7.5 Servo Alarm Output - 50
3.7.6 Brake Interlock Output - 50
3.8 Setting MECHATROLINK-II Communications - 52
3.8.1 MECHATROLINK-II Communications - 52
3.8.2 Wiring Specifications - 52
3.8.3 Setting Communications Specifications - 53
3.8.4 Transmission Cycle and Number of Stations- 54
3.8.5 MECHATROLINK-II Communications Status Indicator COM LED- - - - - - - - - - - - - 54

4 MECHATROLINK-II Commands - 55

4.1 Lists of Commands - 55
4.1.1 Main Commands List - 55
4.1.2 Subcommands List - 57
4.2 Main Commands- 58
4.2.1 Communication Phases- 58
4.2.2 No Operation (NOP: 00H)- 60
4.2.3 Read Parameter (PRM_RD: 01H) - 61
4.2.4 Write Parameter (PRM_WR: 02H) - 62
4.2.5 Read ID (ID_RD: 03H)- 63
4.2.6 Setup Device (CONFIG: 04H) - 64
4.2.7 Read Alarm or Warning (ALM_RD: 05H)- 65
4.2.8 Clear Alarm or Warning (ALM_CLR: 06H) - 66
4.2.9 Start Synchronous Communication (SYNC_SET: 0DH) - - - - - - - - - - - - - - - - - - - 67
4.2.10 Establish Connection (CONNECT: 0EH) - 68
4.2.11 Release Connection (DISCONNECT: 0FH) - 69
4.2.12 Write Stored Parameter (PPRM_WR: 1CH) - 69
4.2.13 Set Coordinates (POS_SET: 20H) - 70
4.2.14 Apply Brake (BRK_ON: 21H) - 70
4.2.15 Release Brake (BRK_OFF: 22H) - 72
4.2.16 Turn Sensor ON (SENS_ON: 23H) - 73
4.2.17 Turn Sensor OFF (SENS_OFF: 24H) - 73
4.2.18 Stop Motion (HOLD: 25H) - 74
4.2.19 Request Latch Mode (LTMOD_ON: 28H) - 75
4.2.20 Release Latch Mode (LTMOD_OFF: 29H) - 76
4.2.21 Status Monitoring (SMON: 30H) - 77
4.2.22 Servo ON (SV_ON: 31H) - 78
4.2.23 Servo OFF (SV_OFF: 32H)- 79
4.2.24 Interpolation Feed (INTERPOLATE: 34H)- 80
4.2.25 Positioning (POSING: 35H)- 81

4.2.26 Constant Speed Feed (FEED: 36H) - 82
4.2.27 Interpolation Feeding with Position Detection (LATCH: 38H) - - - - - - - - - - - - - - - - - - 83
4.2.28 External Input Positioning (EX_POSING: 39H) - 84
4.2.29 Homing (ZRET: 3AH) - 85
4.2.30 Adjusting (ADJ: 3EH) - 87

4.3 Subcommands - 90
4.3.1 No Operation (NOP: 00H) - 90
4.3.2 Read Parameter (PRM_RD: 01H) - 90
4.3.3 Write Parameter (PRM_WR: 02H) - 91
4.3.4 Read Alarm or Warning (ALM_RD: 05H) - 91
4.3.5 Write Stored Parameter (PPRM_WR: 1CH) - 92
4.3.6 Request Latch Mode (LTMOD_ON: 28H) - 92
4.3.7 Release Latch Mode (LTMOD_OFF: 29H) - 93
4.3.8 Status Monitoring (SMON: 30H) - 93

4.4 Combination of MECHATROLINK-II Main Commands and Subcommands - - - - - - - - - 94

4.5 Command Data Field - 95
4.5.1 Latch Signal Field Specifications: LT_SGN - 95
4.5.2 Option Field Specifications: OPTION - 95
4.5.3 Status Field Specifications: STATUS - 96
4.5.4 Monitor Selection and Monitor Information Field Specifications:
SEL_MON1/2/3/4, MONITOR1/2/3/4 - 101
4.5.5 IO Monitor Field Specifications: IO_MON - 103
4.5.6 Substatus Field Specifications: SUBSTATUS - 104
4.5.7 Alarm/Warning Field Specifications: ALARM - 105

4.6 Command and Response Timing - 108
4.6.1 Command Data Execution Timing - 108
4.6.2 Monitor Data Input Timing - 108

4.7 Operation Sequence - 109
4.7.1 Operation Sequence for Managing Parameters Using a
Controller - 109
4.7.2 Operation Sequence for Managing Parameters
Using SERVOPACK - 110
4.7.3 Operation Sequence to Turn the Servo ON - 111
4.7.4 Operation Sequence When OT (Overtravel Limit Switch) Signal is Input - - - - - - - 111
4.7.5 Operation Sequence When E-STP Signal is Input - 111

5 Trial Operation - 113

6 Functions - 118

6.1 Filter Setting - 118

6.2 Switching Servomotor Rotation Direction - 119

6.3 Electronic Gear - 120
6.3.1 Setting the Electronic Gear - 120

6.4 Position Management - 123

6.5 Motion Commands - 124

6.5.1 INTERPOLATE Related Commands - - -

1 Before Use

1.1 Checking Products

Confirm that the following items have been delivered together with the SERVOPACK. Verify that the ordered product as received by the model number marked on the nameplate on the SERVOPACK.
If you find any irregularities such as incorrect SERVOPACK model, damages, and missing parts or items, contact your Omron Yaskawa representative or the dealer from whom you purchased the products.

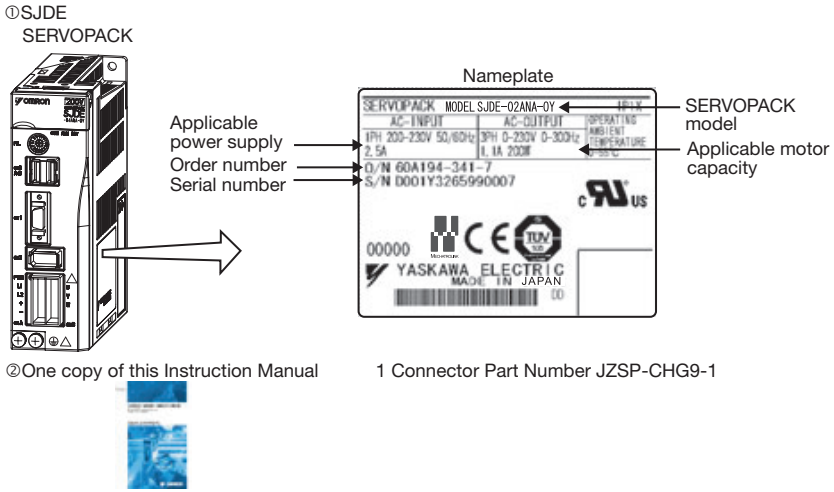

1.2 Warning Label

A warning label is located on the side of the SERVOPACK.

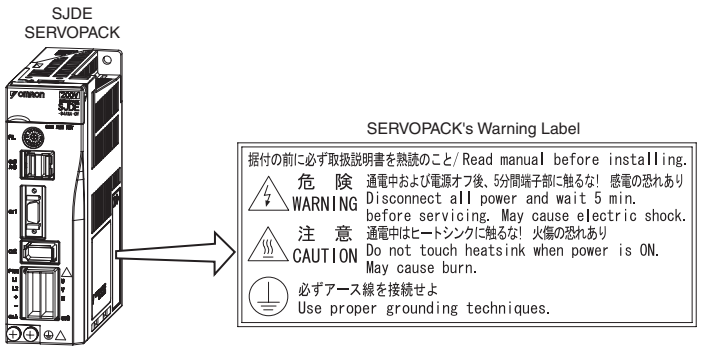

1.3 Model Designation

SJDE—02 A N A - OY

JUNMA series SJDE SERVOPACK

Applicable servomotor capacity

Code	Output (W)
01	100
02	200
04	400
08	750

Power supply voltage
A: 200 VAC

Interface specification
N: MECHATROLINK-II

Design revision order
A

Sold by OMRON YASKAWA Motion Control B.V.

1.4 SERVOPACKs and Applicable Servomotors

Rated Output	Servomotors		SERVOPACKs
	Without Brakes	With Brakes	
100 W	SJME-01AM□41-OY	SJME-01AM□4C-OY	SJDE-01ANA-OY
200 W	SJME-02AM□41-OY	SJME-02AM□4C-OY	SJDE-02ANA-OY
400 W	SJME-04AM□41-OY	SJME-04AM□4C-OY	SJDE-04ANA-OY
750 W	SJME-08AM□41-OY	SJME-08AM□4C-OY	SJDE-08ANA-OY

1.5 Part Names and Functions

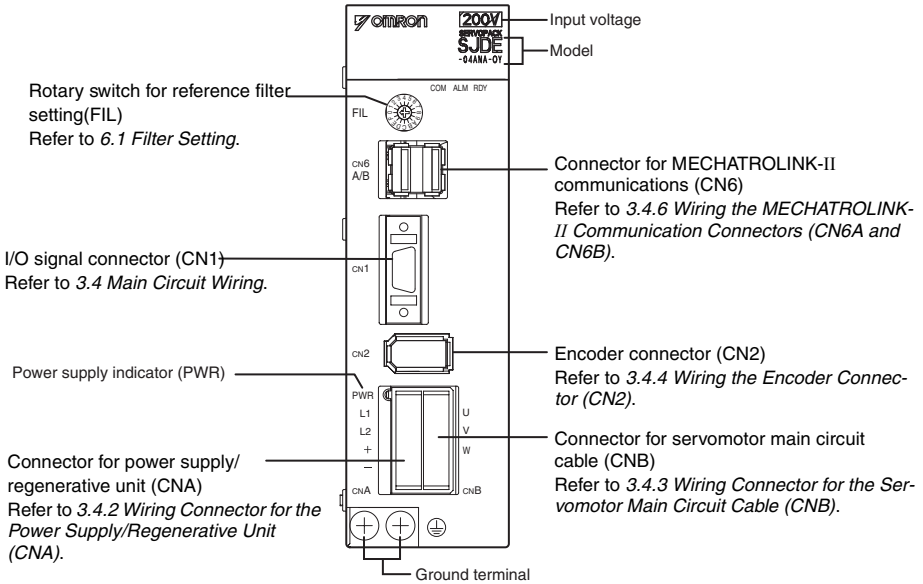

■ MECHATROLINK-II Communications Settings

The SW1 and the SW2 switches set the MECHATROLINK-II communications settings. Settings that have been changed are enabled when the power is turned OFF and then ON again.

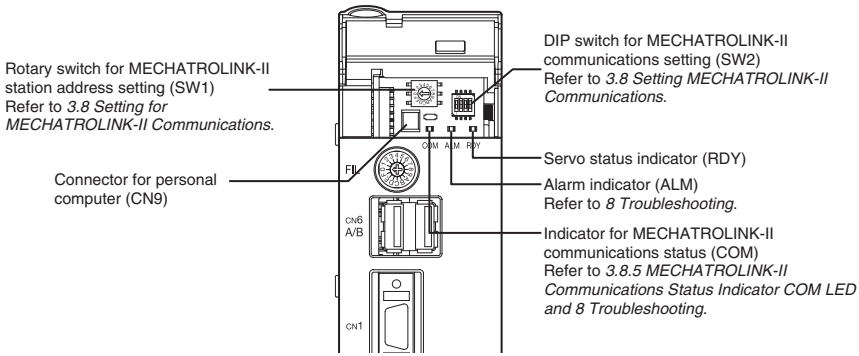

1.6 Applicable Standards

JUNMA series SERVOPACKs comply with the following standards.

1.6.1 North American Safety Standards (UL, CSA)

Model		UL*1 Standards (UL File No.)	CSA*2 Standards	Certification
SERVOPACK	SJDE	UL508C (E147823)	CSA C22.2 No.14	UL
Servomotor	SJME	UL1004 (E165827)	CSA C22.2 No.100	UL

* 1. Underwriters Laboratories Inc.
* 2. Canadian Standards Association.

1.6.2 European Directives

Model		Low Voltage Directive	EMC Directive		Certification
			EMI	EMS	
SERVOPACK	SJDE	EN50178	EN55011 class A, group 1	EN61000-6-2	TUV PS*
Servomotor	SJME	IEC60034-1 IEC60034-5 IEC60034-8 IEC60034-9	EN55011 class A, group 1	EN61000-6-2	TUV PS*

* TÜV Product Services GmbH
Note: 1. Because SERVOPACKs and servomotors are built-in type, reconfirmation is required after being installed in the final product.

2 Installation

The following shows the installation location and method of the SERVOPACK.

2.1 Installation Conditions

Item		Specifications
Operating temperature		0 °C to +55 °C
Operating humidity		90% RH or less (with no condensation)
Storage temperature		-20 °C to +70 °C
Storage humidity		90% RH or less (with no condensation)
Installation site		Free of corrosive gases Free of dust and iron powder Not subjected to moisture or lubrication oil such as cutting oil.
Altitude		1000 m or below
Vibration resistance		$4.9 m/s^2$
Shock resistance		$19.6 m/s^2$
Operating conditions		Installation category (overvoltage category): II Pollution degree: 2 Protection class: IP1X (EN50178)
Installation Site	Installation in a control panel	Design the control panel size, unit layout, and cooling method so that the temperature around the SERVOPACK does not exceed 55 °C. Note: To extend product life and maintain reliability, keep the temperature inside the control panel under 45 °C.
	Installation near a heating unit	Minimize the heat radiating from the heating unit as well as any temperature rise caused by natural convection so that the temperature around the SERVOPACK does not exceed 55 °C.
	Installation near a source of vibration	Install a vibration isolator beneath the SERVOPACK to avoid subjecting it to vibration.
	Installation at a site exposed to corrosive gas	Corrosive gas does not have an immediate effect on the SERVOPACK but will eventually cause the electronic components and contactor-related devices to malfunction. Take appropriate action to avoid corrosive gas.

2.2 Installation Method

■ Installation Method and Direction

- Install the SERVOPACK perpendicular to the wall.
- Connect the mounting holes securely to the mounting surface with M4 screws.

SJDE-08ANA-OY: Three mounting holes

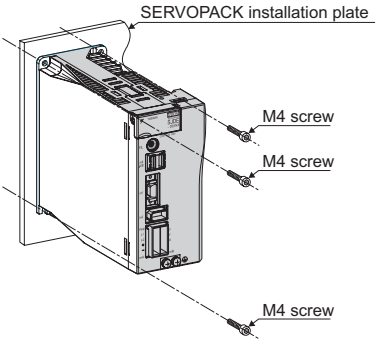

SJDE-01 to 04ANA-OY: Two mounting holes

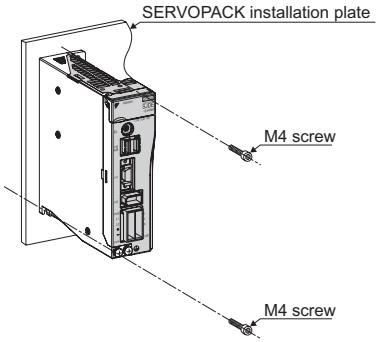

■ Space between SERVOPACK Units

- Be sure to keep a space between adjacent SERVOPACK units as shown the following figure if they are mounted inside the control panel. This allows the units to cool.

⚠ CAUTION

- Do not cover the inlet or outlet parts of the SERVOPACK and prevent any foreign objects, such as metallic fragment, or combustibles from entering the product.

  Failure to observe this caution may cause internal elements to deteriorate resulting in malfunction or fire.

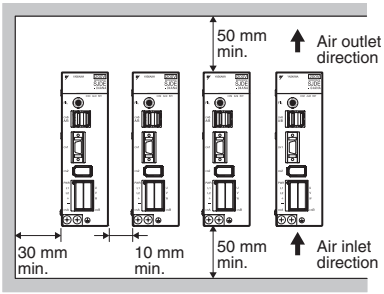

3 Wiring

3.1 System Configuration

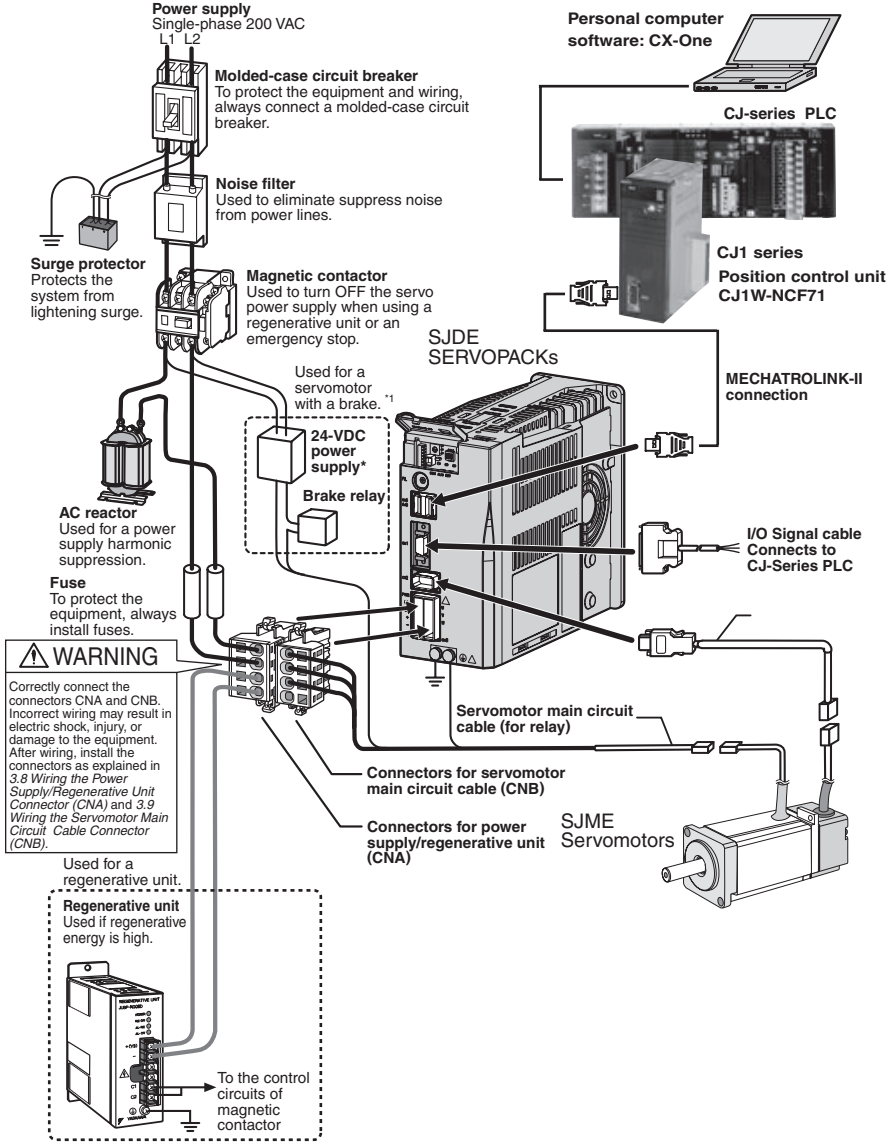

* 1. Prepare a 24-VDC power supply for the brake separately from the sequence power supply.

3.2 Standard Connection

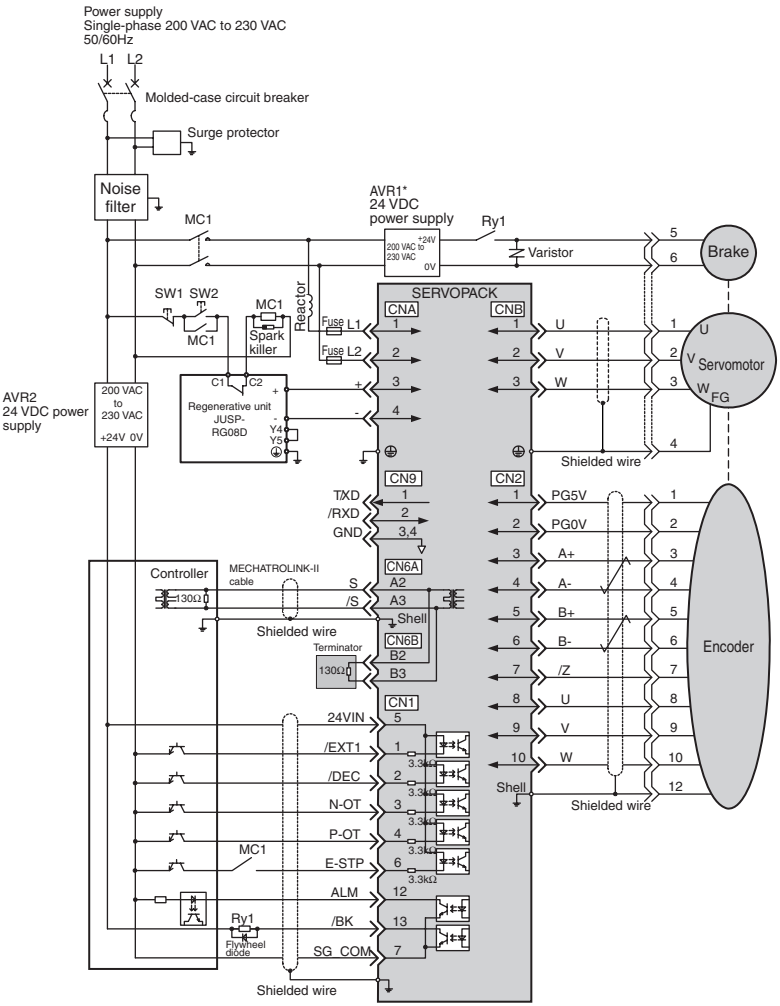

Note: 1. AVR1:24 VDC power supply for brake
AVR2:24 VDC power supply for sequence
PB1:Power OFF switch
PB2:Power ON switch
MC1:Magnetic contactor
Ry1:Brake relay

• Parts example

Spark killer	Okaya Electric Industries Co., Ltd.	CRE-50500
Flywheel diode	Toshiba Corporation	1NH42
Brake relay	OMRON Corporation	MY series
Varistor	NIPPON CHEMI-CON CORPORATION	TNR7V121K

2. The ground protection circuit is designed for ground fault inside the motor windings while the motor is running. Therefore, it may not protect the system under the following conditions.
   - A low-resistance ground fault occurs between the main circuit cable and connector for the servomotor.
   - The power supply is turned ON during a ground fault.

   To configure a safer system, install an earth leakage breaker for protection against overloads and short-circuit, or install an earth leakage breaker for ground protection combined with a wiring circuit breaker.
3. Position information is not stored in the SERVOPACK, so this information will be lost if the power supply is turned OFF. If this information is required for the operation of the host controller, make sure that the system has an emergency stop signal (E-STP) that will stop operations without turning OFF the power supply.

* 1. Prepare a 24 VDC power supply for sequence separately from the 24 VDC power supply for brake.

3.3 Precautions on Wiring

⚠ WARNING

- Be sure to correctly ground the SERVOPACK and the servomotor.
- Wiring must be performed by an authorized person qualified in electrical work.
- Configure the circuit's power supply to be automatically cut off if E-STP signal is OFF at occurrence of emergency stop. (Refer to *3.7.3 Emergency Stop Signal Input*.)

  The residual voltage rotates the servomotor for a few seconds after the power supply has been turned OFF, and may result in injury or damage to the equipment. Be sure to completely stop the motor by turning OFF the servo using the emergency stop.
  Position information is not stored in the SERVOPACK, so this information will be lost if the power supply is turned OFF. This information cannot be read again if the power supply is turned OFF.
- When using the servomotor for a vertical axis, install safety devices to prevent workpieces from falling off because of alarms. Workpiece's falling off may result in injury or malfunction.
- Configure the interlock circuit so that the system is interlocked to avoid injury whenever the protective cover on the machine is opened or closed.

3.3.1 Protection for Power Supply Line

- Use a molded-case circuit breaker and fuse to protect the power supply line. The SERVOPACK connects directly to a commercial power supply without a transformer, so always use a circuit breaker and fuse to protect the servo system from accidental high voltage.

3.3.2 Caution for Grounding

Consider the following conditions when grounding the SERVOPACK.

- For a ground wire, use as thick a cable as possible (2.0 mm^2 or thicker).
- A ground resistance of 100 (Ω) or less is recommended.
- Ground to one point only.

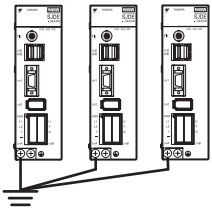

3.3.3 Caution for Cable

- For wiring, use the specified cables. Use cables that are as short as possible.
- Do not bend or apply tension to cables. The conductor of a signal cable is thin (0.08 to 0.12 mm^2), so handle the cables carefully.

3.3.4 Power Loss

Power Loss with SERVOPACK Rated Output

Main Circuit Power Supply	SERVOPACK		Output Current (Effective Value) A	Main Circuit Power Loss W	Control Circuit Power Loss W	Total Power Loss W
	Model	Capacity				
Single-phase 200 V	SJDE-01ANA-OY	100 W	0.84	6	9	15
	SJDE-02ANA-OY	200 W	1.1	8		17
	SJDE-04ANA-OY	400 W	2.0	16		25
	SJDE-08ANA-OY	750 W	3.7	27		36

Note: Values obtained with the servomotor rated output.

3.3.5 SERVOPACKs and Applicable Peripheral Devices

SERVOPACK		Power Supply Capacity per SERVO-PACK kVA	Power sup-ply Capacity of Molded-case Circuit Breaker Arms*1 *2	Power supply Capacity and Model of External Fuse	Inrush Cur-rent A0-p	Mag-netic Contac-tor	Noise Filter	Surge Protector	AC Reactor
Type	Capa-city								
SJDE-01ANA-OY	100 W	0.40	4	0KLK 015.T (15 Arms)	30	HI-11J	R7A-FIZN105-BE	R·C·M-601BQZ-4	X5052
SJDE-02ANA-OY	200 W	0.75							X5053
SJDE-04ANA-OY	400 W	1.2	8						X5054
SJDE-08ANA-OY	750 W	2.2	16	0KLK 030.T (30 Arms)	60	HI-15J	R7A-FIZN109-BE		X5056
Manufacturer		-	-	Littelfuse Inc.	-	Yaskawa Controls Co., Ltd.	Block Elek-tronik	Okaya Electric Industries Co., Ltd.	Yaskawa Controls Co., Ltd.

Note: It is recommended to use a general-purpose circuit breaker of the sensed current 200 mA or more, or a circuit breaker for inverters (for high-frequency).
* 1. Nominal value at the rated load. The specified derating is required to select the appropriate molded-case circuit breaker.
* 2. Cut-off characteristics (25 °C): 200 % two seconds min. and 700 % 0.01 seconds min.

IMPORTANT

Ground Fault
The ground protection circuit is designed for ground fault inside the motor windings while the motor is running. Therefore, it may not protect the system under the following conditions.
- A ground fault occurs between the main circuit cable and connector for the servomotor.
- The power supply is turned ON during a ground fault.

To configure a safer system, install an ground fault detector for protection against overloads

and short-circuit, or install an ground fault detector combined with a wiring circuit breaker for ground protection.

3.3.6 Noise Prevention

■ Example of Wiring for Noise Prevention

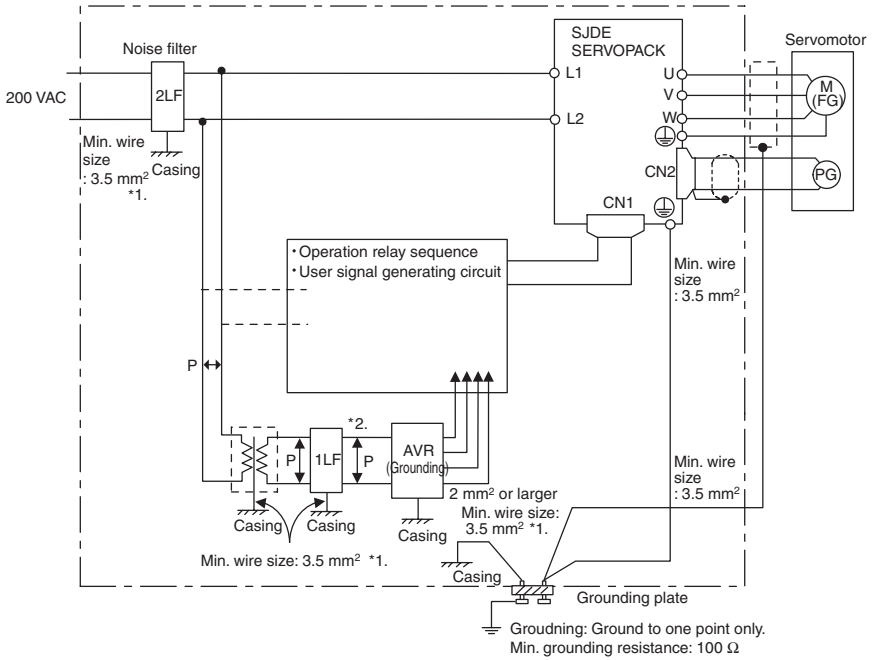

* 1. For the wires connected to the casings for installation purposes, use wires with a diameter of 3.5 mm^2 or larger. Flat braided copper wires are recommended.
* 2. Use twisted pair wires for section P.

■ Correct Grounding

- Servomotor frame grounding:
  Be sure to connect the FG grounding terminal on the frame of the servomotor to the grounding terminal on the SERVOPACK.
- Be sure to ground the grounding terminal of the SERVOPACK.
- If the wires of the servomotor's main circuit are laid in a metal conduit, ground the conduit and the grounding box.

One-point grounding must be used.

■ Noise Filters

Use a block type noise filters to prevent any noise interference from the power-supply line.
The following table lists the recommended noise filters for several SERVOPACK models.

Application of Noise Filters

Power-Supply Voltage	SERVOPACK Model	Recommended Noise Filters		
		Model	Specifications	Manufacturer
Single-phase 230 V +10% 50-60 Hz	SJDE-01ANA-OY SJDE-02ANA-OY SJDE-04ANA-OY	R7A-FIZN105-BE	Single-phase 250 VAC, 5A	Block Transformatoren Elektronik GmbH & Co. KG.
	SJDE-08ANA-OY	R7A-FIZN109-BE	Single-phase 250 VAC, 9A	

Filter dimensions for model R7A-FIZN105-BE

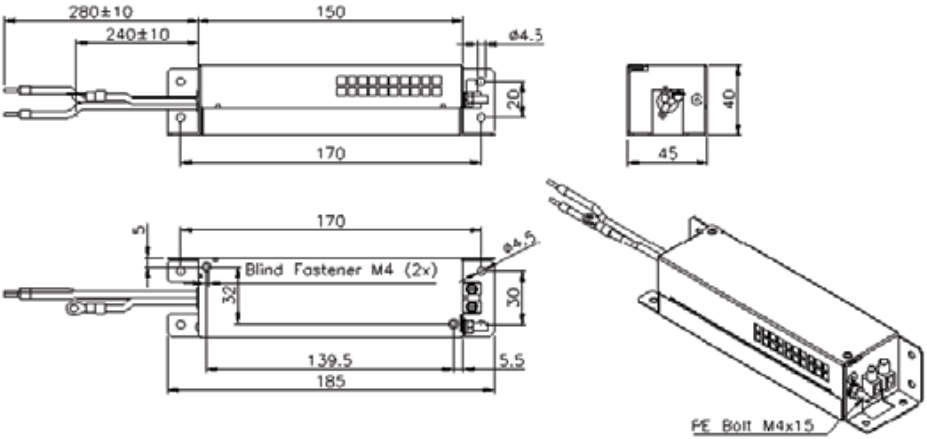

Filter dimensions for model R7A-FIZN109-BE

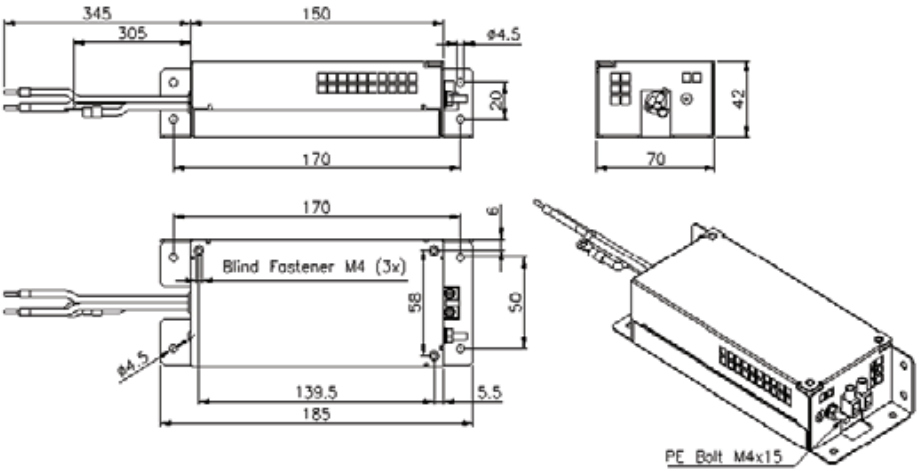

3.3.7 Installation and Wiring Conditions on CE Marking

■ Installation Conditions of EMC Directives

To adapt a combination of a SJME servomotor and a SJDE SERVOPACK to EMC Directives (EN55011, group 1, class A and EN61000-6-2), the following conditions must be satisfied. Because SERVOPACKs are built-in type, reconfirmation is required after being installed in the final product.

IMPORTANT The actual EMC level may differ depending on the actual system's configuration, wiring, and other conditions.

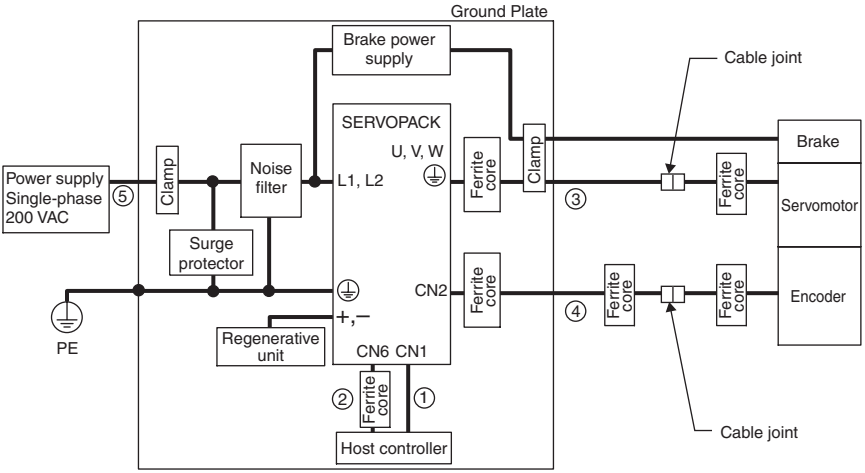

Symbol	Cable Name	Specifications
①	I/O Signals cable	Shielded wire
②	MECHATROLINK-II Communication cable	Shielded wire
③	Servomotor Main circuit cable	Shielded wire
④	Encoder cable	Shielded wire
⑤	AC Line cable	Shielded wire

■ Attaching the Ferrite Core

Coil the servomotor main circuit cable (as a connection) around the ferrite core with two turns, then attach them by the SERVOPACK. Refer to the diagram in the previous page.

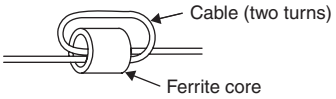

Note: Recommended Ferrite-core
Model: ESD-SR-25 (Tokin. Corp.)

■ Fixing the Cable

Fix and ground the cable shield using a piece of conductive metal (cable clamp).

- Example of Cable Clamp

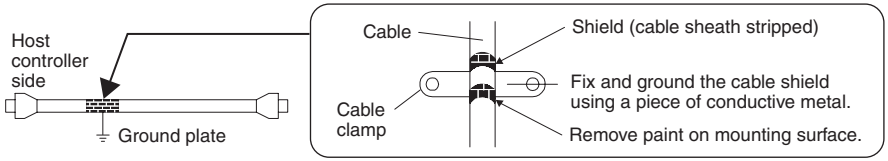

■ Shield Box

A shield box, which is a closed metallic enclosure, should be used for shielding magnetic interference (EMI). The structure of the box should allow the main body, door, and cooling unit to be attached to the ground. The box opening should be as small as possible.

3.3.8 Other Precautions

- Whether the electricity is served or not to the motor, do not use the motor being rotated from the outside.
- When restarting the power supply soon after turning OFF, alarm may occur to the SERVOPACK. Refer to the power supply holding time in the following table to restart the power supply correctly.

SERVOPACK		Min. Waiting Time before Restarting (s)
Model	Capacity	
SJDE-01ANA-OY	100 W	20
SJDE-02ANA-OY	200 W	
SJDE-04ANA-OY	400 W	
SJDE-08ANA-OY	750 W	30

3.4 Main Circuit Wiring

- SJDE SERVOPACKs are suitable where the power supply is less than 5000 Arms (230 V max.).
- SERVOPACKs must be used with UL-listed fuses or molded-case circuit breakers, in accordance with the National Electrical Code (NEC).
- Use 75 °C heat-resistant copper wires or an equivalent.

3.4.1 SERVOPACK Main Circuit Cables

■ Cable Types

Symbol	Name	Allowable Conductor Temperature
PVC	Normal vinyl cable	–
IV	600 V vinyl cable	60 °C
HIV	Temperature-resistant vinyl cable	75 °C

- Wire sizes are selected for three cables per bundle at 40 °C ambient temperature with the rated current.
- Use cables with a minimum withstand voltage of 600 V for main circuits.
- If cables are bundled in PVC or metal ducts, consider the reduction ratio of the allowable current.
- Use heat-resistant cables under high ambient or panel temperatures where normal vinyl cables will rapidly deteriorate and will not be able to use in a short period of time.
- Do not use cables under continuous regenerative state.

■ Wire Size and Allowable Current

The following table shows the wire size and allowable current for three cables. Use a cable whose specifications meet or are less than allowable current in the table.

- 600 V Heat-resistant Vinyl Cables (HIV)

AWG Size	Nominal Cross Section Diameter mm^2	Configuration Number of wires/mm^2	Conductive Resistance Ω/mm^2	Allowable Current at Ambient Temperature A		
				30 °C	40 °C	50 °C
20	0.5	19/0.18	39.5	6.6	5.6	4.5
-	0.75	30/0.18	26.0	8.8	7.0	5.5
18	0.9	37/0.18	24.4	9.0	7.7	6.0
16	1.25	50/0.18	15.6	12.0	11.0	8.5
14	2.0	7/0.6	9.53	23	20	16

Note: The values in the table are only for reference.

■ Power Supply Input Terminals (L1, L2), Motor Connection Terminals (U, V, W), and Regenerative Unit Connection Terminals (+, -)

Capacity W	SERVOPACK Type	Terminal Symbol		
		L1, L2	U, V, W	+, -
100	SJDE-01ANA-OY	HIV1.25 mm^2	HIV1.25mm^2 Wiring length: 20 m max.	HIV1.25mm^2 Wiring length: 0.5 m max.
200	SJDE-02ANA-OY			
400	SJDE-04ANA-OY	HIV2.0 mm^2		
750	SJDE-08ANA-OY			

Note: Connectors are used for all wiring.

■ Ground Terminal (⏚)

Wire Size	Terminal Screw Size	Tightening Torque
HIV 2.0 mm^2 min.	M4	1.2 to 1.4 N·m

■ Peripheral Devices List

Name	Specifications	Type	Length	Appearance	Manufacturer
Power cable for Junma servomotors without brake SJME-0@AMB41-OY	Flexible cables (standard) UL/CSA listed Shielded cable Bending radius (dynamic) > 10x diameter Cycles > 10 million	JZSP-CHM000-01-5E	1.5 m	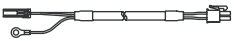	Omron Yaskawa Motion Control, BV. *4
		JZSP-CHM000-03-E	3 m		
		JZSP-CHM000-05-E	5 m		
		JZSP-CHM000-10-E	10 m		
		JZSP-CHM000-15-E	15 m		
		JZSP-CHM000-20-E	20 m		
Power cable for Junma servomotors with brake SJME-0@AMB4C-OY	Flexible cables (standard) UL/CSA listed Shielded cable Bending radius (dynamic) > 10x diameter Cycles > 10 million	JZSP-CHM030-01-5E	1.5 m	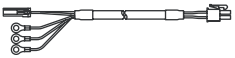	
		JZSP-CHM030-03-E	3 m		
		JZSP-CHM030-05-E	5 m		
		JZSP-CHM030-10-E	10 m		
		JZSP-CHM030-15-E	15 m		
		JZSP-CHM030-20-E	20m		
Connector Kit for Servomotor Main Circuit Cable *1	Motor end crimp type (Common for servomotors with or without brakes)	JZSP-CHM9-1*2	—		
	SERVOPACK end (CNB) spring type (Common for servomotors with or without brakes)	JZSP-CHM9-2*3	—		
	SERVOPACK end (CNB) crimp type (Common for servomotors with or without brakes)	Refer to Page 35.	—	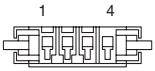	J.S.T. Mfg Co.,Ltd. *5
Connector Kit for Power Supply/ Regenerative Unit*1	SERVOPACK end (CNA) spring type (Common for servomotors with or without brakes)	JZSP-CHG9-1*3	—		Omron Yaskawa Motion Control, BV. *4

(cont'd)

Name	Specifications	Type	Length	Appearance	Manufacturer
Encoder Cable for Junma servomotors SMJE-0@AMB4@-OY	Flexible cables (standard) UL/CSA listed Shielded cable Bending radius (dynamic) > 10x diameter Cycles > 10 million	JZSP-CHP800-01-5E	1.5 m	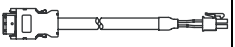	Omron Yaskawa Motion Control, BV. *4
		JZSP-CHP800-03-E	3 m		
		JZSP-CHP800-05-E	5 m		
		JZSP-CHP800-10-E	10 m		
		JZSP-CHP800-15-E	15 m		
		JZSP-CHP800-20-E	20 m		
	Non flexible cables	R7A-CRZ003C	3 m		
		R7A-CRZ005C	5 m		
		R7A-CRZ0010C	10 m		
Connector Kit for Encoder Cable*1	Motor end crimp type	JZSP-CHP9-1*2	—		
	SERVOPACK end (CN2) soldered type (black)	JZSP-CHP9-2	—		
	SERVOPACK end (CN2) soldered type (gray)	JZSP-CHP9-3	—		
I/O Signal Cable		JZSP-CHI003-01	1 m		
		JZSP-CHI003-02	2 m		
		JZSP-CHI003-03	3 m		
		R7A-CPZ001S	1 m		
		R7A-CPZ001S	2 m		
Connector Kit for I/O Signal Cable (CN1)*1	SERVOPACK end soldered type	JZSP-CHI9-1	—		

(cont'd)

Name	Specifications	Type	Length	Appearance	Manufacturer
MECATROLINK-II Communication Cable	Cable with connectors at both ends*6 (Without ferrite core)	JEPMC-W6002-□□*7	—		Omron Yaskawa Motion Control BV. *4
		JEPMC-W6002-□□-E *7 (Compliant with RoHS Directive)	—		
	Cable with connectors at both ends *6 (With ferrite core)	JEPMC-W6003-□□*7	—		
		JEPMC-W6003-□□-E *7 (Compliant with RoHS Directive)	—		
	Terminators	JEPMC-W6022	—		
		JEPMC-W6022-E (Compliant with RoHS Directive	—		
Cable for Personal Computer	Cables	JZSP-CPS00-02	2 m (6.56 ft)	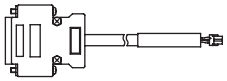	
Tool		J-FAT-OT	—		
Cooling Fan		JZSP-CHF08-01 for SJDE-04ANA-OY SERVOPACKs	—	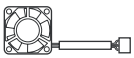	
		JZSP-CHF08-02 for SJDE-08ANA-OY SERVOPACKs	—	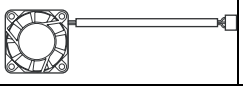	

Note: Contact the manufacturer for more detailed information such as external diameter.
* 1. Connectors for CNB, CN1, and CN2 are not provided with the SERVOPACK. The servomotor-end connectors are not provided with the servomotor. These connector kits must be purchased.
* 2. Refer to pages that provide details for the applicable crimping tool type. The crimping tool must be ordered separately.
* 3. With an opening tool (lever for wire)
* 4. Omron Yaskawa Motion Control BV. URL: http://www.omronyaskawa.com
* 5. J.S.t.Mfg co., Ltd. URL: http://www.jst-mfg.com
* 6. The total cable length must be 50 m (164 ft) max. and the cable length between stations 0.5 m (1.64 ft) min.
* 7. Specify the cable length in □□ when ordering as shown in the table below. .

□□	Cable Length m (ft)
A5	0.5 (1.64)
01	1 (3.28)
03	3 (9.84)
05	5 (16.4)
07	7 (30.0)

□□	Cable Length m (ft)
10	10 (32.8)
20	20 (65.6)
30	30 (98.4)
40	40 (131)
50	50 (164)

3.4.2 Wiring Connector for the Power Supply/Regenerative Unit (CNA)

⚠ CAUTION

- Observe the following precautions when wiring main circuit connector.
  - Remove the connector from the SERVOPACK prior to wiring.
  - Insert only one wire per terminal opening on the connector.
  - Make sure that the exposed wire is not electrically shorted to adjacent exposed wires.

Use the following procedure when connecting the SERVOPACK to the spring type connector for the power supply/regenerative unit.

1. Remove the connector from the SERVOPACK.
   Be sure to remove the connector from the SERVOPACK when wiring.
2. Strip the outer coating.
   Straighten the exposed wire with your fingers to prevent the wires from unwinding.

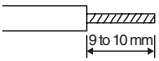

3. Open the wire terminal on the power supply connector housing (plug) with the tool (lever for wiring) using the procedure shown in Fig. A or B.
   - Insert the connection hook end of the provided tool into the slot as shown in Fig. A.
     Tool must be purchased by the customer.
   - Use a standard flat-blade screwdriver (blade width of 2.5 to 3.0 mm (0.09 to 0.12 in)). Put the blade into the slot, as shown in Fig. B, and press down firmly to open the wire terminal.

   Either the procedure shown in Fig. A or B can be used to open the wire insert opening.

Fig. A

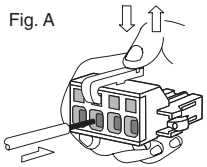

Tool Type: J-FAT-OT
(J.S.T. Mfg Co., Ltd.)

Fig.B

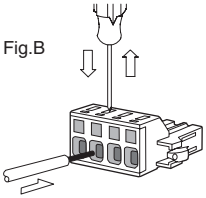

4. Insert the exposed wire into the opening.
   Insert the exposed wire into the opening and then close the opening by releasing the tool hook or removing the screwdriver.

■ Wire Size

Item		Wire Size
Conductor Size	Twisted wire	AWG14 to AWG22
	Single wire	ϕ1.6 mm to ϕ0.65 mm
Sheath Diameter		ϕ3.8 mm to ϕ1.7 mm

5. Attach the connector to the SERVOPACK.
   After wiring the connector, attach the connector to the SERVOPACK.

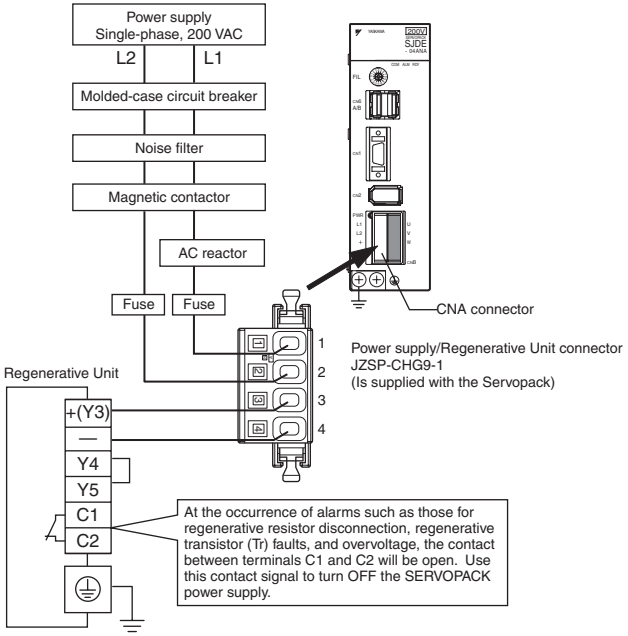

Note: 1. Pull lightly on the wires to confirm that they are securely connected.
2. Make sure that none of the insulating sheaths of the wires are caught in the springs.

■ Connector for Power Supply/Regenerative Unit (CNA)

Pin No.	Symbol	Signal Name
1	L1	Power supply input terminals
2	L2	
3	+	Regenerative unit connection terminals
4	–	

3.4.3 Wiring Connector for the Servomotor Main Circuit Cable (CNB)

Wire the connector for the servomotor main circuit cable (CNB) in the same way as the connector for the power supply/regenerative unit (CNA). Refer to *3.4.2 Wiring Connector for the Power Supply/ Regenerative Unit (CNA)* for details and the procedure.

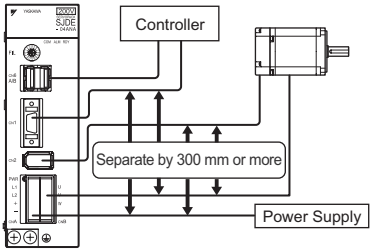

IMPORTANT

- The distance between the servomotor main circuit and the encoder cable as well as the I/O cable and MECHATROLINK-II cable is 300 mm or more.
- Do not bundle or run the servomotor main circuit cable in the same duct with other cables.
- Be sure that the maximum wiring length of the servomotor main circuit cable is 20 m.

■ Servomotors without Brakes

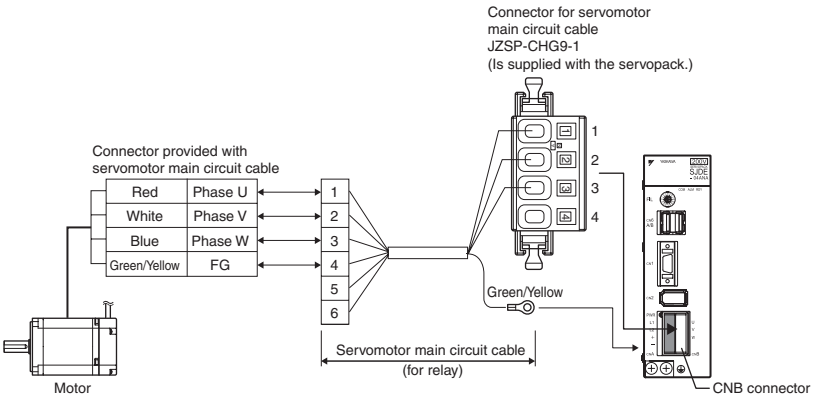

Note: Confirm pin numbers on the connector as well.

Connection Diagram for Standard Servomotor Main Circuit Cable

The connection diagram for the standard cable (JZSP-CHM000-□□ cable with connectors on both ends) is shown below. If the servomotor main circuit cable is prepared by the customer, refer to the diagram below and wire the cable correctly.

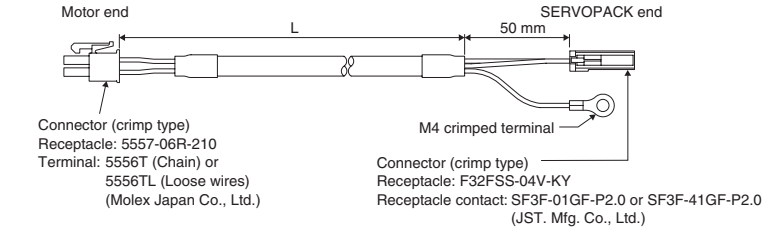

Servomotor End Connector
(Viewed from cable insertion side)

SERVOPACK End Connector
(Viewed from cable insertion side)

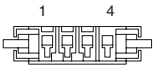

Pin No.	Signal Name	Lead Color
1	Phase U	Red
2	Phase V	White
3	Phase W	Blue
4	FG	Green/Yellow
5	—	—
6	—	—

Shielded wire

Pin No.	Signal Name	Lead Color
1	Phase U	Red
2	Phase V	White
3	Phase W	Blue
4	—	—
Crimped terminal	FG*	Green/Yellow

*: Connect the FG pin to the grounding terminal of the SERVOPACK.

■ Servomotors with Brakes

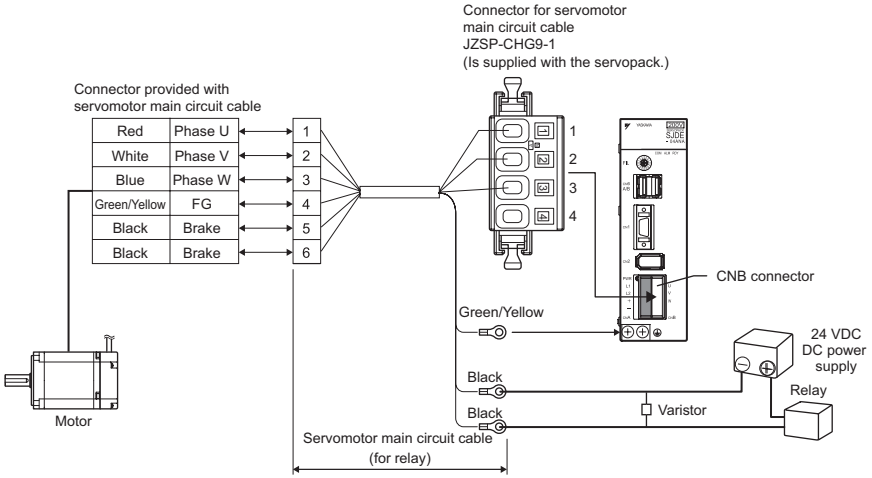

Note: 1. A 24-VDC power supply must be prepared.
2. Connect the varistor in parallel with the 24-VDC power supply terminal and the GND terminal to suppress the surge voltage caused by turning the holding brake ON and OFF.
3. Confirm pin numbers on the connector as well.
4. If using the servomotor to drive a vertical axis, configure a circuit to turn the holding brake ON and OFF so that the movable section will not be pulled down by gravity when the power supply of the SERVOPACK is turned OFF.
5. Turn the holding brake on the secondary side ON and OFF as shown in the figure above. A varistor must be connected.

Connection Diagram for Standard Servomotor Main Circuit Cable

The connection diagram for the standard cable (JZSP-CHM030-□□ cable with connectors on both ends) is shown below. If the servomotor main circuit cable is prepared by the customer, refer to the diagram below and wire the cable correctly.

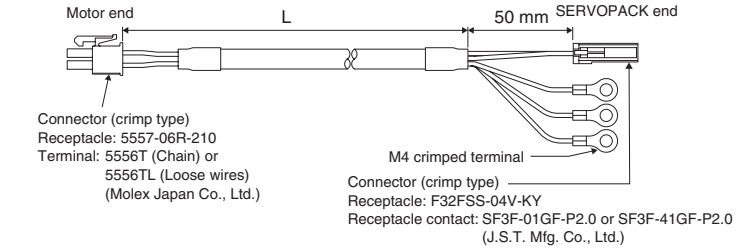

Servomotor End Connector
(Viewed from cable insertion side)

Pin No.	Signal Name	Lead Color
1	Phase U	Red
2	Phase V	White
3	Phase W	Blue
4	FG	Green/Yellow
5	Brake	Black
6	Brake	Black

Shielded wire

SERVOPACK End Connector
(Viewed from cable insertion side)

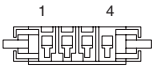

Pin No.	Signal Name	Lead Color
1	Phase U	Red
2	Phase V	White
3	Phase W	Blue
4	—	—
Crimped terminal	FG*1	Green/Yellow
Crimped terminal	Brake*2	Black
Crimped terminal	Brake*2	Black

*1: Connect the FG pin to the grounding terminal of the SERVOPACK.
*2: No polarity for connection to the brake.

3.4.4 Wiring the Encoder Connector (CN2)

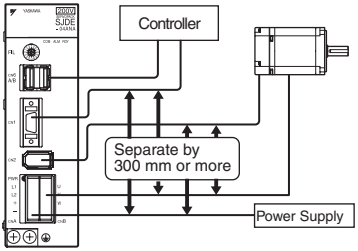

IMPORTANT

- Separate the encoder cable at least 300 mm from power lines (i.e., high-voltage lines such as the power supply line and servomotor main circuit cable).
- Do not bundle or run the encode cable in the same duct with power lines.
- Be sure that the maximum wiring length of the encoder cable is 20 m.

■ Connection Diagram for Standard Encoder Cable

The connection diagram for the standard cable (JZSP-CHP800-□□ cable with connectors on both ends) is shown below. If the encoder cable is prepared by the customer, refer to the diagram below and wire the cable correctly.

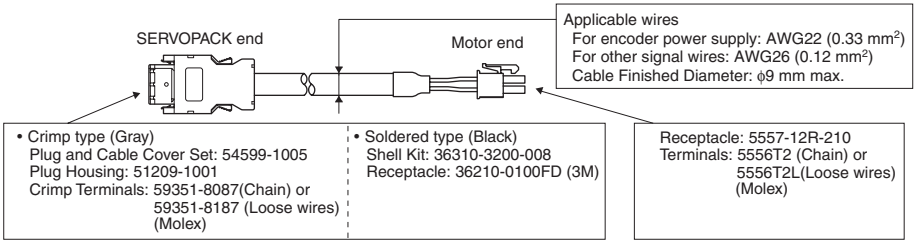

SERVOPACK End Connector
T(Viewed from soldered side)

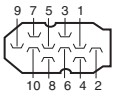

Servomotor End Connector
(Viewed from cable insertion side)

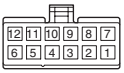

Pin No.	Signal Name	Lead Color
1	PG5V	Red
2	PG0V(GND)	Black
3	Phase A (+)	Blue
4	Phase A (-)	Blue/White
5	Phase B (+)	Yellow
6	Phase B (-)	Yellow/White
7	Phase /Z	Purple
8	Phase U	Gray
9	Phase V	Green
10	Phase W	Orange
Shell	—	Shield

Shield wire

Pin No.	Signal Name	Lead Color
1	PG5V	Red
2	PG0V(GND)	Black
3	Phase A (+)	Blue
4	Phase A (-)	Blue/White
5	Phase B (+)	Yellow
6	Phase B (-)	Yellow/White
7	Phase /Z	Purple
8	Phase U	Gray
9	Phase V	Green
10	Phase W	Orange
11	—	—
12	FG	Shield

Note: Confirm pin numbers on the connector as well.

3.4.5 Wiring the I/O Signal Connector (CN1)

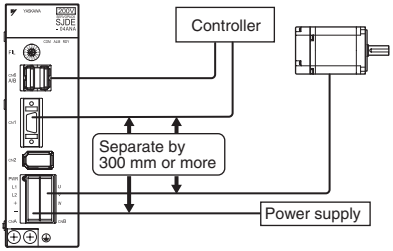

Note: Do not pull or apply excessive force on the cable. Damage to the cable or connectors may cause the product to stop operating or malfunction.

IMPORTANT

- Separate the I/O cable at least 300 mm from power lines (i.e., high-voltage lines, such as the power supply line and servomotor main circuit cable).
- Be sure that the maximum wiring length of the I/O cable is 3 m.

■ Connection Diagram for Standard I/O Cable (Supplied by Yaskawa Electric)

The connection diagram connection diagram for the standard cable (JZSP-CHI003-□□ cable with connector) is shown below. If the I/O signal cable is prepared by the customer, refer to the diagram below and wire the cable correctly.

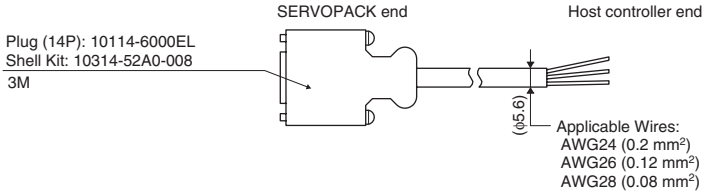

SERVOPACK Connector (Plug)
(Viewed from soldered side)

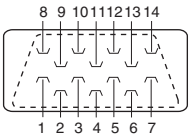

Pin No.	I/O	Code	Signal Name	Lead Color	Dot Mark	
					Number	Color
1	Input	/EXT1	External_Latch	Orange	1	Black
2	Input	/DEC	Homing Decelaration			Red
3	Input	N-OT	Reverse run prohibit	Light gray		Black
4	Input	P-OT1	Forward run prohibit			Red
5	Input	+24VIN	External input power supply	White		Black
6	Input	E-STP	Emergency stop			Red
7	Output	SG-COM	Output signal ground	Yellow		Black
8						Red
9				Pink		Black
10						Red
11				Orange	2	Black
12	Output	ALM	Servo alarm			Red
13	Output	/BK	Brake	Light gray		Black
14						Red
Shell	–	–	FG	–	–	

Note: Confirm pin numbers given on the connector as well.

■ Connection Diagram and Description for the General-purpose control cables (R7A-CPZ□□□S) supplied by OMRON Company.

A General-purpose Control Cable connects to the Servo Driver's Control I/O Connector (CN1). There is no connector on the controller end. Wire a connector to match the controller if you are connecting to a Position Control Unit and a compatible cable is not available, or if the drive is connected to a controller manufactured by another company.

■ Cable Models

Model	Length (L)	Outer Diameter of the cable	Weight
R7A-CPZ001S	1 m	5,6 mm	Approx. 0.1 kg
R7A-CPZ002S	2m	5,6 mm	Approx. 0.2 kg

■ Connection Configuration and Dimensions

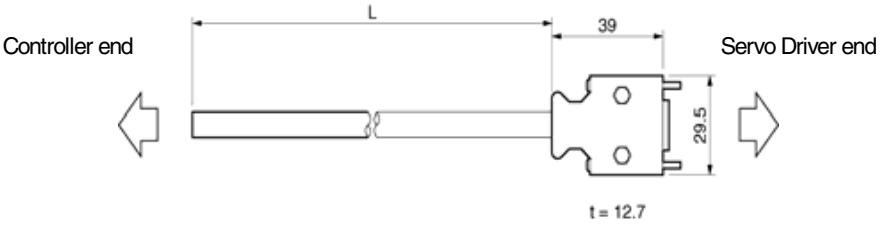

■ Wiring

No.	Wire Color/Mark Color	Signal Name
1	Orange/Red (-)	/EXT1 External Latch
2	Orange/Black (-)	/DEC Homing Deceleration
3	Gray/Red (-)	N-OT Reverse run prohibited
4	Gray/Black (-)	P-OT Forward run prohibited
5	White/Red (-)	+24VIN
6	Yellow/Black (-)	RUN
7	White/Black (-)	OGND
8	Pink/Red (-)	
9	Pink/Black (-)	
10	Orange/Red (--)	
11	Orange/Black (--)	
12	Gray/Red (--)	/ALM
13	Gray/Black (--)	BKIR
14	Yellow/Red (-)	

Connector plug: 10114-3000VE (Sumitomo 3M)
Connector case: 10314-52A0-008 (Sumitomo 3M)
Wires with the same wire color and the same number of marks are twisted pairs

■ Connector Pin Arrangement

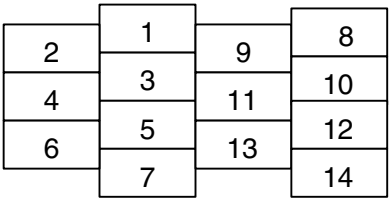

3.4.6 Wiring the MECHATROLINK-II Communication Connectors (CN6A and CN6B)

■ Number of Stations

A maximum of 30 slave stations can be connected when a repeater is connected. The maximum number of slave stations that can be connected is determined by the MECHATROLINK-II communications settings. Refer to *3.8 Setting MECHATROLINK-II Communications* for details.

■ Communication Cables

Use the cables specified in the table below.

Type	Model	Length
MECHATROLINK Communication Cable (with connectors at both ends, without ferrite core)	JEPMC-W6002-□□	Specify the length in □□. Refer to Page 31 for details.
	JEPMC-W6002-□□-E (Compliant with RoHS Directive)	
MECHATROLINK Communication Cable (with connectors at both ends, with ferrite core)	JEPMC-W6003-□□	
	JEPMC-W6003-□□-E (Compliant with RoHS Directive)	

■ Cable Length

The total cable length must be 50 m max. The cable length between stations must be 0.5 m min.

■ Terminator

Install a terminator on the SERVOPACK connected at the end of communication cable.

Terminator Type	Connector Type
MECHATROLINK-II Terminator	JEMPC-W6022
	JEMPC-W6022-E (Compliant with RoHS Directive)

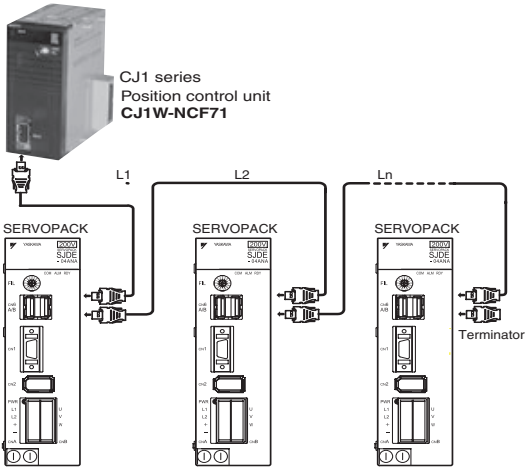

L1+L2+···+Ln ≦ 50 m

Cable length between stations: 0.5 m min.

Max. number of slaves: 30 (with repeaters connected)

IMPORTANT

Keep a distance 300 mm min. between power lines (high-voltage circuit such as power supply line and servomotor main circuit cable) and MECHATROLINK-II cable.

3.4.7 Wiring the Personal Computer Connector (CN9)

Prepare the specified cable to connect the SERVOPACK to a personal computer.

■ Communication Cable

Use the specified twisted-pare and shielded twisted cable.

Type	Model	Length
Personal Computer Cable	JZSP-CPS00-02	2 m

■ Applicable Wires (Tin coated annealed copper wires)

Conductor Size (Configuration of exposed wire)	Sheath Outer Diameter
AWG24 (0.16 mm)	ϕ0.9 to ϕ1,45 mm
AWG26 (0.16 mm)	
AWG28 (0.127 mm)	

■ Recommended Wires

UL1061 and UL1007

■ Cable Configuration

Remove the sheath to 1.7 to 2.3 mm from the cable configuration.

■ Cable Form

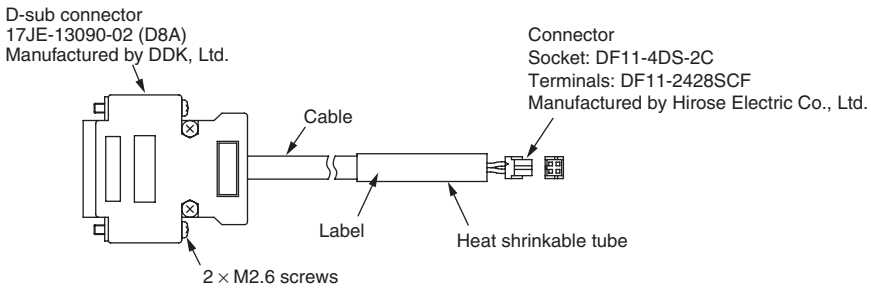

■ Connector Specifications

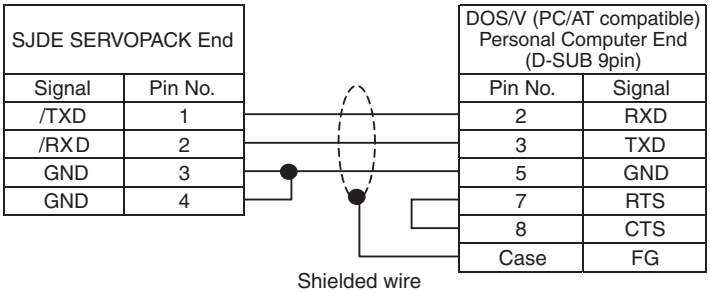

SJDE SERVOPACK End	
Signal	Pin No.
/TXD	1
/RXD	2
GND	3
GND	4

DOS/V (PC/AT compatible) Personal Computer End (D-SUB 9pin)	
Pin No.	Signal
2	RXD
3	TXD
5	GND
7	RTS
8	CTS
Case	FG

3.5 Connection Examples of Input Signal

■ Connection Examples

Input current is 7 mA per point.

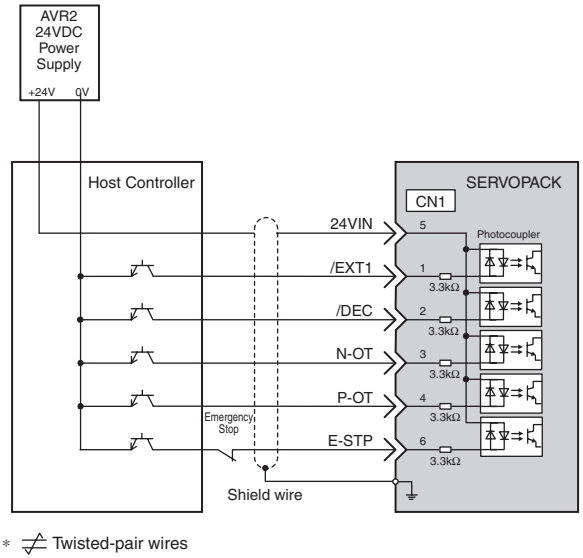

IMPORTANT

Prepare an external 24-VDC power supply. The 24-VDC power supply is not built into the SERVOPACK.

- Specifications of the external power supply for sequence input signals:
  24 VDC ± 1 V, 50 mA min.

The same power supply as that of the output circuit should be used.

3.6 Connection Example of Output Signal

Set the load so that the output current will fall within 50 mA or less.

Photocoupler output (Per output signal)
- Max. voltage: 30 VDC
- Max. current: 50 m ADC

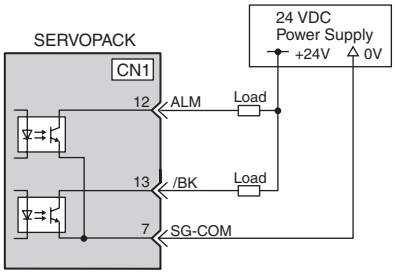

3.7 I/O Signals

3.7.1 Homing Deceleration Signal Input

The usual connection for homing deceleration signal /DEC is shown below. A deceleration signal is input when the homing function (ZRET command) of MECHATROLINK-II communications specifications is used.

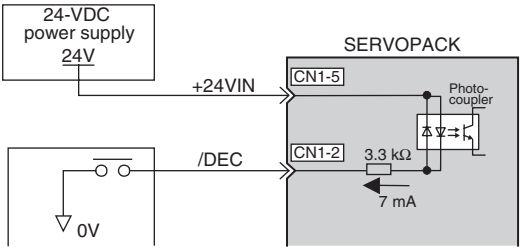

Signal Name	Signal	Function	
Homing Deceleration Signal Input	/DEC	ON (low level)	The signal turns ON.
		OFF (high level)	The signal turns OFF.

3.7.2 External Latch Signal Input

The usual connection for external latch signal input /EXT1 is shown below. This input signal is used for the homing (ZRET command) and the external signal input positioning (EX_POSING) functions of MECHATROLINK-II communications specifications.

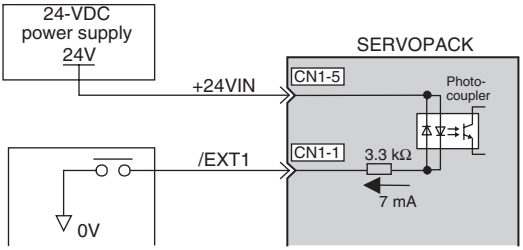

Signal Name	Signal	Function	
External Latch Signal Input	/EXT1	ON (low level)	The external signal is ON.
		OFF (high level)	The external signal is OFF.

3.7.3 Emergency Stop Signal Input

The usual connection for emergency stop signal input E-STP is shown below. When the signal turns OFF while the servomotor is rotating, the servomotor will be stopped by the dynamic brake.

⚠ WARNING

- Use the emergency stop signal input E-STP to forcibly turn OFF the servo from an external sequence, such as host controller, at occurrence of servo alarm or system emergency stop.

  The residual voltage rotates the servomotor for a few seconds after the power supply has been turned OFF, and may result in injury or damage to the equipment. Be sure to completely stop the motor by turning OFF the servo using the emergency stop.
- When executing the JOG operation and the home position search operation using CX-Drive, the E-STP signal will be ignored. Alternative measures must be taken in case an emergency stop is needed.

Note: For the emergency stop signal, the SERVOPACK processing for stopping is executed by the software. As the safety specifications of some applications may not satisfy local safety requirements, add external safety circuits as required.

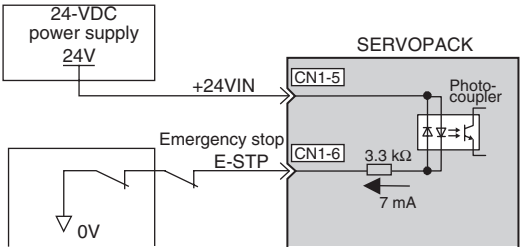

Signal Name	Signal	Function	
Emergency Stop Signal Input	E-STP	ON (low level)	Releases the emergency stop.
		OFF (high level)	Emergency stop (Forced servo OFF)

- The command warning 1 (A.95A) will occur if a SV_ON command is sent while the SERVOPACK is in emergency stop status.
- The emergency stop alarm (A.280) will occur if the emergency stop signal turns ON while the power is being supplied to the servomotor.

■ Sequence at Occurrence of Emergency Stop

⚠ WARNING

- Configure the circuit's power supply to be automatically cut off if E-STP signal is OFF at occurrence of emergency stop.

  The residual voltage rotates the servomotor for a few seconds after the power supply has been turned OFF, and may result in injury or damage to the equipment.

  Position information is not stored in the SERVOPACK, so this information will be lost if the power supply is turned OFF. This information cannot be read again if the power supply is turned OFF.

IMPORTANT

- Do not frequently start or stop the servomotor by turning ON or OFF the power supply or by using the servo ON (SV-ON) or servo OFF (SV-OFF) signal. Failure to observe this warning will cause deterioration of the SERVOPACK internal element.

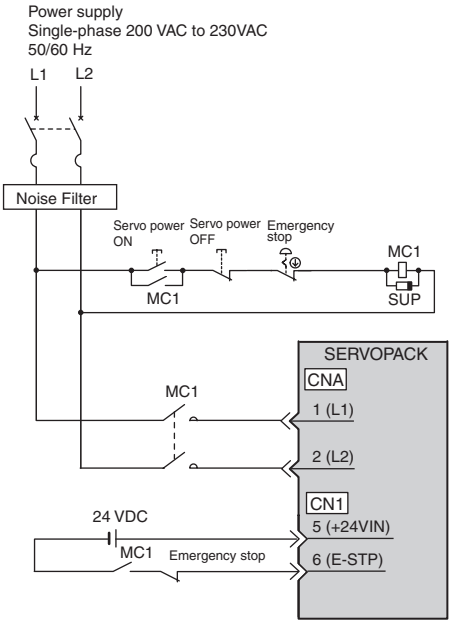

Set the following parameter to disable the emergency stop input signal if it is absolutely necessary.

Parameter		Descriptions
Pn 515	n.□4□□	Emergency stop when CN1-6 input signal is OFF (H-level) (factory setting)
	n.□8□□	Always sets the input signal ON to disable the emergency stop.

3.7.4 Forward/Reverse Run Prohibited Inputs (Overtravel Inputs)

⚠ WARNING

- When executing JOG operation and the home position search operation using CX-Drive, the P-OT and N-OT signals will be ignored. Alternative measures must be taken in case of overtravel.

The usual connection for forward/reverse run prohibited inputs P-OT and N-OT is shown below. Connect these signals to limit switches to forcibly stop the servomotor when the machine movable part travels beyond the allowable motion range. The servomotor will decelerate to a stop, and then the zero clamp is performed. The maximum torque during deceleration to a stop will be the servomotor maximum torque.

Note: For forward/reverse run prohibited inputs, the SERVOPACK processing for stopping is executed by the software. As the safety specifications of some applications may not satisfy local safety requirements, add external safety circuits as required.

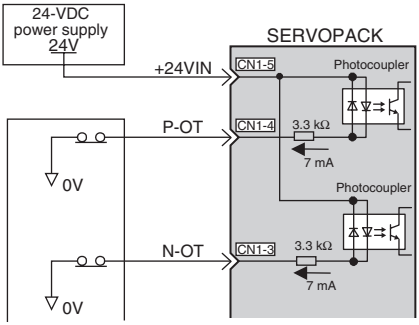

Signal Name	Signal	Function	
Forward Run Prohibited Input	P-OT	ON at low (L) level	Forward run allowed (normal status)
		OFF at high (H) level	Forward run prohibited (reverse run is allowed)
Reverse Run Prohibited Input	N-OT	ON at low (L) level	Reverse run allowed (normal status)
		OFF at high (H) level	Reverse run prohibited (forward run is allowed)

■ Related Parameters

Parameter		Descriptions
Pn.50A	n.2□□□	Forward run permitted when CN1-4 input signal is ON (L level)
	n.8□□□	Always forward run allowed
Pn.50B	n.□4□□	Reverse run permitted when CN1-3 input signal is ON (L level)
	n.□4□□	Always reverse run allowed

3.7.5 Servo Alarm Output

The usual connection for alarm related output signals is shown below.
These signal is output when the SERVOPACK detects an error.

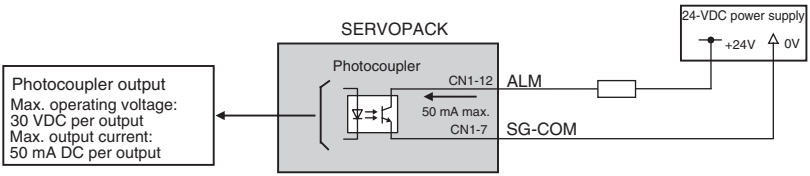

A 24-VDC power supply must be connected externally.

Signal Name	Signal/Meaning		Function
Servo Alarm Outputs	ALM	Servo alarm output	Normal status when ON (close) Alarm output when OFF (open)
	SG-COM	Output signal ground	

Note: Open collector outputs are used for output signals.

- At alarm occurrence, an alarm code is output to the host controller through MECHATROLINK-II transmission. Take care that the SERVOPACK power supply is not turned OFF when the alarm output signal turns ON.
- Configure the system so that the SERVOPACK power supply is turned OFF by the contact signal between C1 and C2 of the regenerative unit or the contact signal of the thermometal cut-out for the external resistor.
  The power supply must be turned OFF and the emergency stop input signal must be open when using the system emergency stop.

3.7.6 Brake Interlock Output

The usual connection for brake interlock signal /BK is shown below.
These signal turns ON when the servo turns ON, and OFF when the servo turns OFF. They are used to control the brake. The brake can also be released by sending a release brake (BRK_OFF) command using MECHATROLINK-II communications.

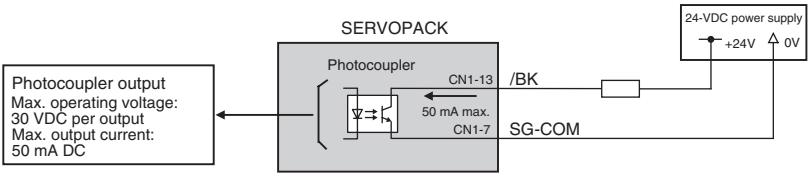

Signal Name	Signal/Meaning		Function
Brake Interlock Output	/BK	Brake interlock output	Releases the brake when ON (close) Applies the brake when OFF (open)
	SG-COM	Output signal ground	

■ /BK Signal Timing

When the servo is turned OFF while the servomotor stops.

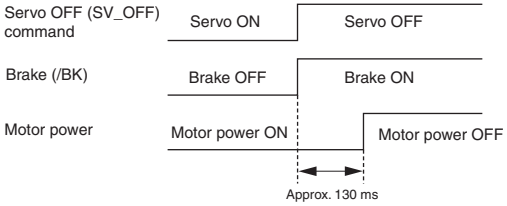

When the servo is turned OFF while the servomotor is running.

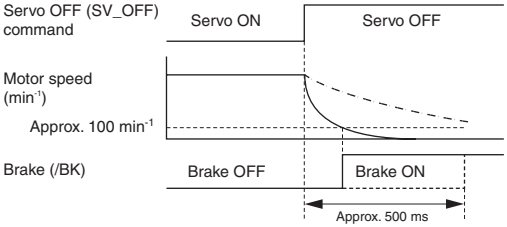

/BK Signal Output Conditions While the Servomotor is Rotating
/BK signal turns ON when either of the following is satisfied.
· The servomotor speed decreases to a value 100 min^{-1} or less after the servo has turned OFF.
· 500 ms elapses after the servo has been turned OFF.

3.8 Setting MECHATROLINK-II Communications

3.8.1 MECHATROLINK-II Communications

■ Outline

MECHATROLINK-II is a field network that makes it possible for one factory automation controller (C1 master station) to control decentralized multiple factory automation devices (slave stations) such as servo drives, inverters, and I/O modules.

■ Configuration

- Bus connection with one C1 master station and a maximum of 30 slave stations
- Install terminators at both ends of the network cable to reduce signal reflection.
- Connect repeaters for a network with a total distance exceeding 30 m, regardless of whether the number of slaves is 17 or more or 16 or less.

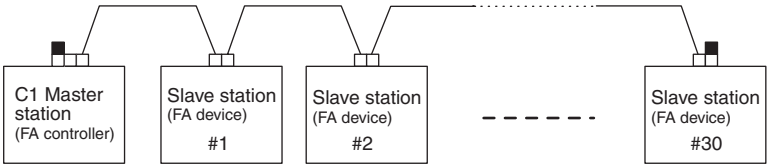

3.8.2 Wiring Specifications

■ Terminators

Install terminators at both ends of the network cable to reduce signal reflection, some Mechatrolink controllers already have a terminating resistor built-in.

Model	External Appearance
JEPMC-W6022	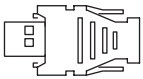
JEPMC-W6022-E (Compliant with RoHS Directive)	

■ Repeaters

A repeater is needed in the network, when the total distance between stations exceeds 30 m, or when the number of slave stations is 17 or more.

Type	External Appearance
JEPMC-REP2000	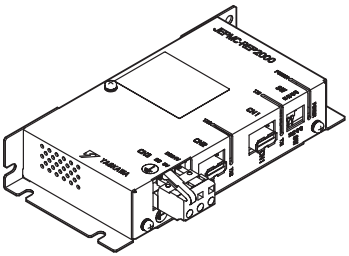

Repeater Connection Example

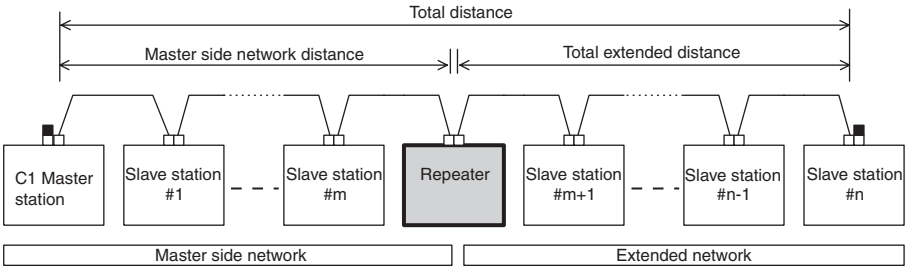

3.8.3 Setting Communications Specifications

■ Setting Transmission Bytes

The SW2 bit 2 switch sets the MECHATROLINK-II transmission bytes, as shown below. Settings that have been changed are enabled when the power is turned OFF and ON.

SW1 (factory setting)

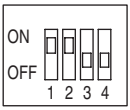

SW2 (factory setting)

SW2	Name	Setting	Description	Factory Setting
Bit 1	Reserved	OFF	Do not set	ON
		ON	Fixed	
Bit 2	Transmission bytes	OFF	17 bytes	ON
		ON	32 bytes	
Bit 3	Station address	OFF	Station address = 40H+SW1	OFF
		ON	Station address = 50H+SW1	
Bit 4	Selection of filter setting method	OFF	Sets by using the FIL rotary switch (invalid setting by Pn00A).	OFF
		ON	Sets by Pn00A (invalid setting by using the FIL rotary switch).	

■ Setting Station Address

The SW1 and SW2 bit 3 switches set the MECHATROLINK-II station address.

SW2 Bit 3	Station Address
OFF	40H + SW1
ON	50H + SW1

3.8.4 Transmission Cycle and Number of Stations

The transmission cycle and number of stations that can be set with the SERVOPACK are shown below.

Transmission Bytes	Transmission Cycle				
	1.0 ms	1.5 ms	2.0 ms	3.0 ms	4.0 ms
17	14	23	30	30	30
32	8	14	20	30	30

Note: 1. If connecting more than 16 stations, use the repeater.
2. The number of stations indicated in the above table is the maximum number of stations that can be connected through MECHATROLINK communications. The actual number of stations may differ depending on the Machine Controller. Refer to the relevant Machine Controller's manual.

3.8.5 MECHATROLINK-II Communications Status Indicator COM LED

The LED indicator COM (green) on the front of SERVOPACK lights up when MECHATROLINK-II communications with the host controller is established.

Status Indicator LED	SERVOPACK Operation Status
COM ALM RDY 2 seconds after the power turns ON COM ALM RDY	Standby for establishment of communications
COM	MECHATROLINK-II communications are busy.
COM ALM RDY	Servo ON status (Power is being supplied)

: Unlit

: Lit

: Blinking

4 MECHATROLINK-II Commands

4.1 Lists of Commands

4.1.1 Main Commands List

The MECHATROLINK-II main commands are classified into three types: Common commands, common motion commands, and servo standard commands.

Classifications	Command Code	Command Name	Functions	Processing Classifications	Synchronization Classifications	Subcommand	Remarks
Common Commands	00H	NOP	No Operation	N	Asynchronous	Can be used	
	01H	PRM_RD	Read Parameter	D	Asynchronous	Cannot be used	
	02H	PRM_WR	Write Parameter	D	Asynchronous	Cannot be used	
	03H	ID_RD	Read ID	D	Asynchronous	Cannot be used	
	04H	CONFIG	Setup Device	C	Asynchronous	Cannot be used	
	05H	ALM_RD	Read Alarm or Warning	D	Asynchronous	Cannot be used	
	06H	ALM_CLR	Clear alarm or warning	C	Asynchronous	Cannot be used	
	0DH	SYNC_SET	Start Synchronous Communication	N	Asynchronous	Cannot be used	
	0EH	CONNECT	Establish Connection	N	Asynchronous	Cannot be used	
	0FH	DISCONNECT	Release Disconnection	N	Asynchronous	Cannot be used	
	1CH	PPRM_WR	Write Stored Parameter	D	Asynchronous	Cannot be used	
Common Motion Commands	20H	POS_SET	Set Coordinates	D	Asynchronous	Cannot be used	
	21H	BRK_ON	Apply Brake	C	Asynchronous	Cannot be used	
	22H	BRK_OFF	Release Brake	C	Asynchronous	Cannot be used	
	23H	SENS_ON	Turn Sensor ON	C	Asynchronous	Cannot be used	
	24H	SENS_OFF	Turn Sensor OFF	C	Asynchronous	Cannot be used	
	25H	HOLD	Stop Motion	M	Asynchronous	Can be used	

Classifications	Command Code	Command Name	Functions	Processing Classifications	Synchronization Classifications	Subcommand	Remarks
Common Motion Commands	28H	LTMOD_ON	Request Latch Mode	C	Asynchronous	Cannot be used	
	29H	LTMOD_ OFF	Release Latch Mode	C	Asynchronous	Cannot be used	
Servo Standard Commands	30H	SMON	Status Monitoring	D	Asynchronous	Can be used	
	31H	SV_ON	Servo ON	C	Asynchronous	Can be used	
	32H	SV_OFF	Servo OFF	C	Asynchronous	Can be used	
	34H	INTERPOLATE	Interpolation Feed	M	Synchronous	Can be used	
	35H	POSING	Positioning	M	Asynchronous	Can be used	
	36H	FEED	Constant Speed Feed	M	Asynchronous	Can be used	
	38H	LATCH	Interpolation Feeding with Position Detection	M	Synchronous	Can be used	
	39H	EX_ POSING	External Input Positioning	M	Synchronous	Can be used	
	3AH	ZRET	Homing	M	Asynchronous	Can be used	
	3EH	ADJ	Adjustment	D	Asynchronous	Cannot be used	

<Processing Classifications>
N: Network command
D: Data communication command
C: Control command
M: Motion command
X: Compound command

IMPORTANT

If an unsupported command is received, the warning A.95b will occur, and the command will be ignored.
The servo is not OFF and the servomotor is not stopped if an unsupported command is received.

4.1.2 Subcommands List

Command Code	Command Name	Functions	Remarks
00H	NOP	No Operation	
01H	PRM_RD	Read Parameter	
02H	PRM_WR	Write Parameter	
05H	ALM_RD	Read Alarm or Warning	
1CH	PPRM_WR	Write Stored Parameter	
28H	LTMOD_ON	Request Latch Mode	
29H	LTMOD_OFF	Release Latch Mode	
30H	SMON	Status Monitoring	

4.2 Main Commands

The following sections describe main command specific items that are unique to the SJDE-□□ANA-OY.
The MECHATROLINK-II main commands use the first to the sixteenth bytes of the command and response data.

4.2.1 Communication Phases

The table below shows the relationship between communication phases and device-level operations in the MECHATROLINK-II during normal operations. The C1 master station phases described here indicate the communication state of the C1 master station in relation to the slave stations, but do not indicate the state of the C1 master station device.

Relationship between Communication Phase and Device level Operation

C1 Master Station			Phase Transition between C1 Master and Slave Stations		Slave Station	
Phase	Device Operation	Command			Device Operation	Phase
0	Power ON	-			Power ON	0
1	Initialization state	CONNECT			Prepared for CONNECT	1
2, 3	Normal operation state	Normal operation commands			Normal operation state	2, 3
4	Operate communication	DISCONNECT			Stop communication	4
5	Power OFF	-			Power OFF	5

■ Descriptions

The communication state of the C master station in each phase is explained.

Phase 0

When the C1 master and slave stations are turned ON, operation switches to phase 1.

Phase 1

The C1 master station completes the internal initialization including the communication system, and confirms the response state of all the connected slave stations that have no error. Then, the C1 master station sends a CONNECT command to all the connected slave stations to establish communication.
The slave station completes the internal initialization including the communication system, and then awaits the CONNECT command.
The slave station establishes the communication with the C1 master station and then switches to the phase specified by command.

Phase 2 (Asynchronous Communication Phase)

The C1 master station uses only asynchronous commands supported by MECHATROLINK-II-compatible devices to exchange data needed for the operation and control of the devices. The timing for the execution of each command is controlled by the C1 master station.
The slave stations exchange data and the control of devices by the commands sent from the C1 master station. The transition to phase 3 or phase 4 is performed by commands from the C1 master station to the slave stations.

Phase 3 (Synchronous Communication Phase)

The C1 master station can use all commands supported by MECHATROLINK-II-compatible devices to exchange data needed for the operation and control of devices. Each command is updated in a constant cycle (communication cycle) and its timing for the execution is controlled by the C1 master station.
The slave stations exchange data and the control of devices by the commands sent from the C1 master station. If there are any errors in communication synchronization, the slave station automatically switches to phase 2. Synchronous communication is started again by sending SYNC_SET command from the C1 master station.

Phase 4

If the C1 master station is turned OFF, the C1 master station sends a DISCONNECT command to all slave stations. The DISCONNECT command is also sent to any slave stations involved if there is a need to change the system configuration.
When the slave station receives the DISCONNECT command from the C1 master station, they execute the reinitialization processing and then shift to connection wait state (phase 1).

Phase 5

When the C1 master and slave stations are turned OFF, they switch to phase 5. The following two state changes depend on which station is turned OFF first.

- C1 Master Station Turned OFF First
  The C1 master station sends the DISCONNECT command to all slave stations before turning OFF the power supply (Recommended Sequence).
  A slave station receiving this command executes the reinitialization processing and then switches to connection wait state (phase 1).
  When the DISCONNECT command has not been sent, or has not been received by the slave station, the slave station detects a communication error and shifts to an alarm state.

- Slave Station Turned OFF First
  After the C1 master station sends the DISCONNECT command to the slave station to be turned OFF, the power supply of the slave station is turned OFF (Recommended Sequence).
  The slave station receiving the command executes the necessary initialization processing and then switches to connection wait state (phase 1).
  If a slave station is turned OFF without using the above procedure, the C1 master station detects a communication error.
  The operations in alarm state and recovery from alarm state depend on the specifications of the device or application.

4.2.2 No Operation (NOP: 00H)

<table>
<tr><th rowspan="2">Byte</th><th colspan="2">NOP</th><th colspan="4" rowspan="2">Description</th></tr>
<tr><th>Command</th><th>Response</th></tr>
<tr><td>1</td><td>00H</td><td>00H</td><td>Processing classifications</td><td>Network command group</td><td>Synchronization classifications</td><td>Asynchronous</td></tr>
<tr><td>2</td><td rowspan="14">–</td><td>ALARM</td><td>Processing time</td><td>Within transmission cycle</td><td>Subcommand</td><td>Can be used</td></tr>
<tr><td>3</td><td rowspan="2">STATUS</td><td colspan="4" rowspan="15">• Returns the status of the ALM, WARNG, and CMDRDY in STATUS bytes only. All other bits are not used. The response will be NOP when the power is turned ON until initialization has been completed, and during this time, the following status will be returned: CMDRDY: 0.
• Can be used during any phase.</td></tr>
<tr><td>4</td></tr>
<tr><td>5</td><td rowspan="13">–</td></tr>
<tr><td>6</td></tr>
<tr><td>7</td></tr>
<tr><td>8</td></tr>
<tr><td>9</td></tr>
<tr><td>10</td></tr>
<tr><td>11</td></tr>
<tr><td>12</td></tr>
<tr><td>13</td></tr>
<tr><td>14</td></tr>
<tr><td>15</td></tr>
<tr><td>16</td><td>WDT</td><td>RWDT</td></tr>
<tr><td>17</td><td rowspan="13">For sub-commands.</td><td rowspan="13">For sub-commands.</td></tr>
<tr><td>18</td></tr>
<tr><td>19</td></tr>
<tr><td>20</td></tr>
<tr><td>21</td></tr>
<tr><td>22</td></tr>
<tr><td>23</td></tr>
<tr><td>24</td></tr>
<tr><td>25</td></tr>
<tr><td>26</td></tr>
<tr><td>27</td></tr>
<tr><td>28</td></tr>
<tr><td>29</td></tr>
</table>

4.2.3 Read Parameter (PRM_RD: 01H)

<table>
<tr><th rowspan="2">Byte</th><th colspan="2">PRM_RD</th><th colspan="4" rowspan="2">Description</th></tr>
<tr><th>Command</th><th>Response</th></tr>
<tr><td>1</td><td>01H</td><td>01H</td><td>Processing classifications</td><td>Data communications command group</td><td>Synchronization classifications</td><td>Asynchronous</td></tr>
<tr><td>2</td><td>–</td><td>ALARM</td><td>Processing time</td><td>100 ms</td><td>Subcommand</td><td>Cannot be used</td></tr>
<tr><td>3</td><td rowspan="2"></td><td rowspan="2">STATUS</td><td colspan="4" rowspan="15">• Reads current operating parameters. The latest set value, however, is read for offline parameters. (The set value is enabled with the Setup Device command (CONFIG).)
• A warning will occur and the command will be ignored in the following cases. If a warning occurs, PARAMETER will not be dependable.
-If NO is not within range: Data setting warning 1 (A.94A)
-If SIZE does not match: Data setting warning 4 (A.94D)
• For details on NO and SIZE, refer to 7.2 List of Parameters.</td></tr>
<tr><td>4</td></tr>
<tr><td>5</td><td rowspan="2">NO</td><td rowspan="2">NO</td></tr>
<tr><td>6</td></tr>
<tr><td>7</td><td>SIZE</td><td>SIZE</td></tr>
<tr><td>8</td><td rowspan="8">–</td><td rowspan="8">PARAMETER</td></tr>
<tr><td>9</td></tr>
<tr><td>10</td></tr>
<tr><td>11</td></tr>
<tr><td>12</td></tr>
<tr><td>13</td></tr>
<tr><td>14</td></tr>
<tr><td>15</td></tr>
<tr><td>16</td><td>WDT</td><td>RWDT</td></tr>
</table>

4.2.4 Write Parameter (PRM_WR: 02H)

<table>
<tr><th rowspan="2">Byte</th><th colspan="2">PRM_WR</th><th colspan="4" rowspan="2">Description</th></tr>
<tr><th>Command</th><th>Response</th></tr>
<tr><td>1</td><td>02H</td><td>02H</td><td>Processing classifications</td><td>Data communications command group</td><td>Synchronization classifications</td><td>Asynchronous</td></tr>
<tr><td>2</td><td rowspan="2">–</td><td>ALARM</td><td>Processing time</td><td>100 ms</td><td>Subcommand</td><td>Cannot be used</td></tr>
<tr><td>3</td><td rowspan="2">STATUS</td><td colspan="4" rowspan="15">• Writes a parameter and does not store them in non-volatile memory.
A written parameter is enabled with the Setup Device command (CONFIG) transmission after setting.
• Can be used during phases 2 and 3.
• A warning will occur and the command will be ignored in the following cases.
-If a parameter is changed mid-operation with CX-Drive: Command warning 1 (A.95A)
-If NO is not within range: Data setting warning 1 (A.94A)
-If SIZE does not match: Data setting warning 4 (A.94D)
-If PARAMETER is not within range: Data setting warning 2 (A.94B)
For details on NO, SIZE, and PARAMETER, refer to 7.2 List of Parameters.</td></tr>
<tr><td>4</td></tr>
<tr><td>5</td><td rowspan="2">NO</td><td rowspan="2">NO</td></tr>
<tr><td>6</td></tr>
<tr><td>7</td><td>SIZE</td><td>SIZE</td></tr>
<tr><td>8</td><td rowspan="8">PARAMETER</td><td rowspan="8">PARAMETER</td></tr>
<tr><td>9</td></tr>
<tr><td>10</td></tr>
<tr><td>11</td></tr>
<tr><td>12</td></tr>
<tr><td>13</td></tr>
<tr><td>14</td></tr>
<tr><td>15</td></tr>
<tr><td>16</td><td>WDT</td><td>RWDT</td></tr>
</table>

4.2.5 Read ID (ID_RD: 03H)

Byte	ID_RD		Description			
	Command	Response				
1	03H	03H	Processing classifications	Data communications command group	Synchronization classifications	Asynchronous
2	–	ALARM	Processing time	Within communication cycle	Subcommand	Cannot be used
3		STATUS	• Reads the ID. The corresponding DEVICE_CODE is shown in the table below.			
4						
5	DEVICE_ CODE	DEVICE_ CODE				
6	OFFSET	OFFSET				
7	SIZE	SIZE				
8	–	ID				
9						
10						
11						
12						
13						
14						
15						
16	WDT	RWDT				

■ Details of DEVICE_CODE

Type/Name		OFFSET / DEVICE_CODE	00	01	02	03	04	05	06	07	08	09	0A
SERVOPACK	Model	00H	S	J	D	E		*1	*1	*2	N	A	00
	Software Ver.	02H	Ver.										
Encoder Software Ver.		12H	Ver.										
Motor Model		20H	*	*	*	*	*	00					
Reserved		50H											
		52H											

Note: 1. Model numbers appear in ASCII code, with the last section as “00.”
2. Spaces indicate unspecified data.
3. The version number of the encoder software is set to 00 (binary) and cannot be changed.

* 1. Rated output.
* 2. : Power supply voltage specifications.

4.2.6 Setup Device (CONFIG: 04H)

Byte	CONFIG		Description			
	Command	Response				
1	04H	04H	Processing classifications	Control command group	Synchronization classifications	Asynchronous
2	–	ALARM	Processing time	Within 4 s + α*	Subcommand	Cannot be used
3		STATUS	• Recalculates all currently set parameters and initializes positions, output signals, etc. • Can be used during phases 2 and 3. • The SERVOPACK will change to Servo OFF if this command is received when the SERVOPACK is Servo ON. • A warning will occur and the command will be ignored in the following cases. -If parameters are changed mid-operation with CX-Drive: Command warning 1 (A.95A)			
4						
5		–				
6						
7						
8						
9						
10						
11						
12						
13						
14						
15						
16	WDT	RWDT				

* $+\alpha$ is setting of the Brake reference-Servo off delay time.

■ Status and Output Signal during CONFIG Command Execution

Status and Output Signal	Before CONFIG	During CONFIG	After CONFIG
ALM (status)	Current status	Current status	Current status
CMDRDY (status)	1	0	1
Other status	Current status	Not specified	Current status
ALARM (code)	Alarms currently occurred	Alarms currently occurred	Alarms currently occurred
ALM (CN1 output signal)	Current status	Current status	Current status
Other output signals	Current status	Not specified	Current status

4.2.7 Read Alarm or Warning (ALM_RD: 05H)

Byte	ALM_RD		Description			
	Command	Response				
1	05H	05H	Processing classifications	Data communications command group	Synchronization classifications	Asynchronous
2	–	ALARM	Processing time	Refer to ■ *Details of ALM_RD_MOD.*	Subcommand	Cannot be used
3		STATUS	• Reads the following alarm or warning status. -Current alarm/warning status -Alarm status history* (warning history is not preserved.) • The ALM_RD_MOD specifications are shown in the following table. • Alarm and warning codes are set in ALM_DATA from byte 6 in their order of detection, and 0 is set in the bytes that are blank in the table. Accordingly, the data in byte 6 is for the latest alarm or warning codes. • A warning will occur and the command will be ignored in the following cases. -If ALM_RD_MOD is not within range: Data setting warning 2 (A.94B)			
4						
5	ALM_RD_MOD	ALM_RD_MOD				
6	–	ALM_DATA				
7						
8						
9						
10						
11						
12						
13						
14						
15						
16	WDT	RWDT				

* Alarm occurrence history is saved in non-volatile memory, and will not be lost if power goes OFF.

■ Details of ALM_RD_MOD

<table>
<tr><th>ALM_RD_MOD</th><th>Description</th><th>Processing Time</th></tr>
<tr><td>0</td><td>Read current alarm/warning status
10 items max. (sixth to fifteenth byte)</td><td>Within communication cycle</td></tr>
<tr><td>1</td><td>Read alarm status history
10 items max. (sixth to fifteenth byte)
(Warning history is not preserved.)</td><td>Within 60 ms</td></tr>
<tr><td>2</td><td>Gets the detailed information of current alarm or warning one by one.
Set the occurrence order from 0 (the latest) to 9 for the alarm index.
<table>
<tr><th>Byte</th><th>Command</th><th>Response</th></tr>
<tr><td>6</td><td>Alarm index</td><td>Alarm index</td></tr>
<tr><td>7-8</td><td>0</td><td>Alarm code</td></tr>
</table></td><td rowspan="2">Within 12 ms</td></tr>
<tr><td>3</td><td>Gets the detailed information of alarm status history one by one.
Set the occurrence order from 0 (the latest) to 9 for the alarm index.
<table>
<tr><th>Byte</th><th>Command</th><th>Response</th></tr>
<tr><td>6</td><td>Alarm index</td><td>Alarm index</td></tr>
<tr><td>7-8</td><td>0</td><td>Alarm code</td></tr>
</table></td></tr>
</table>

Each alarm code of the JUNMA-series SERVOPACK is 2-byte long. The data format of alarm code is as follows.

D15-D12	D11-D4	D3-D0
Reserved (0)	Alarm code	Detailed information

Note: 1. When ALM_RD_MOD = 0 or 1, the alarm code (1-byte long) is returned.
2. When ALM_RD_MOD = 2 or 3, the alarm code (2-byte long) is returned.

4.2.8 Clear Alarm or Warning (ALM_CLR: 06H)

<table>
<tr><th rowspan="2">Byte</th><th colspan="2">ALM_CLR</th><th colspan="4" rowspan="2">Description</th></tr>
<tr><th>Command</th><th>Response</th></tr>
<tr><td>1</td><td>06H</td><td>06H</td><td>Processing classifications</td><td>Control command group</td><td>Synchronization classifications</td><td>Asynchronous</td></tr>
<tr><td>2</td><td rowspan="3">–</td><td>ALARM</td><td>Processing time</td><td>Refer to
■ Details of ALM_CLR_MOD</td><td>Subcommand</td><td>Cannot be used</td></tr>
<tr><td>3</td><td rowspan="2">STATUS</td><td colspan="4" rowspan="14">• Clears the following alarm or warning status.
-Current alarm/warning status
-Alarm status history * (warning history is not preserved.)
• The ALM_CLR_MOD specifications are shown in the following table.
• A warning will occur and the command will be ignored in the following cases.
-If parameters are changed mid-operation with CX-Drive: Command warning 1 (A.95A)
-If ALM_CLR_MOD is not within range: Data setting warning 2 (A.94B)</td></tr>
<tr><td>4</td></tr>
<tr><td>5</td><td>ALM_CLR_MOD</td><td>ALM_CLR_MOD</td></tr>
<tr><td>6</td><td rowspan="10">–</td><td rowspan="10">–</td></tr>
<tr><td>7</td></tr>
<tr><td>8</td></tr>
<tr><td>9</td></tr>
<tr><td>10</td></tr>
<tr><td>11</td></tr>
<tr><td>12</td></tr>
<tr><td>13</td></tr>
<tr><td>14</td></tr>
<tr><td>15</td></tr>
<tr><td>16</td><td>WDT</td><td>RWDT</td></tr>
</table>

* Alarm occurrence history is saved in non-volatile memory, and will not be lost if power goes OFF.

■ Details of ALM_CLR_MOD

ALM_CLR_MOD	Description	Processing Time
0	Clear current alarm/warning status	Within 200 ms
1	Clear alarm status history	Within 2 s

4.2.9 Start Synchronous Communication (SYNC_SET: 0DH)

<table>
<tr><th rowspan="2">Byte</th><th colspan="2">SYNC_SET</th><th colspan="4" rowspan="2">Description</th></tr>
<tr><th>Command</th><th>Response</th></tr>
<tr><td>1</td><td>0DH</td><td>0DH</td><td>Processing classifications</td><td>Network command group</td><td>Synchronization classifications</td><td>Asynchronous</td></tr>
<tr><td>2</td><td>–</td><td>ALARM</td><td>Processing time</td><td>Transmission cycle or more</td><td>Subcommand</td><td>Cannot be used</td></tr>
<tr><td>3</td><td rowspan="14"></td><td rowspan="2">STATUS</td><td colspan="4" rowspan="14">• Starts synchronous communications. Switches from phase 2 to phase 3.
• Synchronization is established as values of each WDT in command and response is detected.
• During phase 3, the command will be ignored (without a warning).
• During Servo ON in phase 2, the SERVOPACK will change to Servo OFF if this command is received.
• At the occurrence of the following alarms, this command must be transmitted to restart synchronous communications.
-MECHATROLINK-II Synchronization Error (A.E50)
-MECHATROLINK-II Synchronization Failure (A.E51)
-MECHATROLINK-II Communications Error (A.E60)
-MECHATROLINK-II Transmission Cycle Error (A.E61)
• In the following case, a warning will occur and the command will be ignored.
-During operation using CX-Drive: Command warning 1 (A.95A)</td></tr>
<tr><td>4</td></tr>
<tr><td>5</td><td rowspan="12">–</td></tr>
<tr><td>6</td></tr>
<tr><td>7</td></tr>
<tr><td>8</td></tr>
<tr><td>9</td></tr>
<tr><td>10</td></tr>
<tr><td>11</td></tr>
<tr><td>12</td></tr>
<tr><td>13</td></tr>
<tr><td>14</td></tr>
<tr><td>15</td></tr>
<tr><td>16</td><td>WDT</td><td>RWDT</td></tr>
</table>

4.2.10 Establish Connection (CONNECT: 0EH)

Byte	CONNECT		Description			
	Command	Response				
1	0EH	0EH	Processing classifications	Network command group	Synchronization classifications	Asynchronous
2	–	ALARM	Processing time	Communications cycle or more	Subcommand	Cannot be used
3		STATUS	• Establishes a MECHATROLINK-II connection. Sets the communications mode according to COM_MOD. • VER: Version • Set VER to 21H (Ver. 2.1). • COM_MOD: Communications mode. Refer to the following table. • COM_TIM: Communications cycle Set the multiple number of transmission cycle in the range of 1 to 32. 1 [ms] ≤transmission cycle [ms] × COM_TIM ≤32 [ms] • A warning will occur and the command will be ignored in the following cases. -If COM_MOD is not within range: Data setting warning 2 (A.94B) -If COM_TIM is not within range: Data setting warning 2 (A.94B) -If the transmission bytes is 17, and SUBCMD is 1: Data setting warning 2 (A.94B) -If VER is not equal to 21H in the MECHATROLINK communications mode: Data setting warning 2 (A.94B) -During operation using CX-Drive: Command warning 1 (A.95A) • The only commands that will be accepted are CONNECT, DISCONNECT, and NOP. If any other command is issued, NOP will be sent as a response.			
4						
5	VER	VER				
6	COM_MOD	COM_MOD				
7	COM_TIM	COM_TIM				
8	–	–				
9						
10						
11						
12						
13						
14						
15						
16	WDT	RWDT				

■ Details of COM_MOD

D7	D6	D5	D4	D3	D2	D1	D0
SUBCMD	–	–	–	DTMOD		SYNCMOD	–

• SYNCMOD:
0: Asynchronous communication (Transition to phase 2)
1: Synchronous communication (Transition to phase 3)
• DTMOD: Data transfer method
00, 11: Single transfer
01: Consecutive transfer
• SUBCMD:
0: Subcommand not used
1: Subcommand used
• Set the 0 in the other bits.

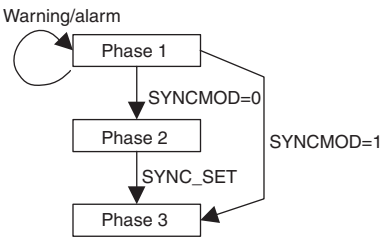

4.2.11 Release Connection (DISCONNECT: 0FH)

Byte	DISCONNECT		Description			
	Command	Response				
1	0FH	0FH	Processing classifications	Network command group	Synchronization classifications	Asynchronous
2	–	ALARM	Processing time	Communications cycle or more	Subcommand	Cannot be used
3		STATUS	• Releases the MECHATROLINK-II connection. The SERVOPACK changes communication to phase 1. • Can be used during any phase. • When this command is received, the following operations will be performed. -The SERVOPACK changes communication to phase 1. -The SERVOPACK changes to Servo OFF. -The reference point setting will become invalid. -The position data will be initialized.			
4						
5		–				
6						
7						
8						
9						
10						
11						
12						
13						
14						
15						
16	WDT	RWDT				

4.2.12 Write Stored Parameter (PPRM_WR: 1CH)

Byte	PPRM_WR		Description			
	Command	Response				
1	1CH	1CH	Processing classifications	Data communications command group	Synchronization classifications	Asynchronous
2	–	ALARM	Processing time	Within 200 ms	Subcommand	Cannot be used
3		STATUS	• Saves a parameter in non-volatile memory. If a parameter is online parameters, those parameters will become effective. Offline parameters are enabled with the Set Up Device command (CONFIG) transmission communication after setting. • Can be used during phases 2 and 3. • A warning will occur and the command will be ignored in the following cases. -If parameters are changed mid-operation with CX-Drive: Command warning 1 (A.95A) -If NO is not within range: Data setting warning1 (A.94A) -If SIZE does not match:Data setting warning 4 (A.94D) -If PARAMETER is not within range: Data setting warning 2 (A.94B) • For details on NO, SIZE and PARAMETER, refer to *7.2 List of Parameters*.			
4						
5	NO	NO				
6						
7	SIZE	SIZE				
8	PARAMETER	PARAMETER				
9						
10						
11						
12						
13						
14						
15						
16	WDT	RWDT				

4.2.13 Set Coordinates (POS_SET: 20H)

Byte	POS_SET		Description			
	Command	Response				
1	20H	20H	Processing classifications	Data communications command group	Synchronization classifications	Asynchronous
2	–	ALARM	Processing time	Within communication cycle	Subcommand	Cannot be used
3		STATUS	• Sets coordinates. REFE can also enable home position (ZPOINT) and software limits. • Can be used during phases 2 and 3. • PS_SUBCMD: Refer to the following table for coordinate setting modes. • Set position in POS_DATA. • A warning will occur and the command will be ignored in the following cases. -If a number not within the range is set for PS_SUBCMD: Data setting warning 2 (A.94B)			
4						
5	PS_SUBCMD	PS_SUBCMD				
6	POS_DATA	POS_DATA				
7						
8						
9						
10	–	–				
11						
12						
13						
14						
15						
16	WDT	RWDT				

■ Details of PS_SUBCMD

D7	D6	D5	D4	D3	D2	D1	D0
REFE	–	–	–	POS_SEL			

- REFE: Sets reference point.
  0: Does not set reference point.
  1: Sets reference point.
  Decides the coordinates, and ZPOINT (home position) and software limits are enabled.
- POS_SEL: Selects coordinates.
  3: Sets POS_DATA to the reference point and the coordinate system (POS, MPOS, APOS, IPOS, and TPOS) if APOS (machine coordinate system feedback position) is selected (The “3: APOS” can only be selected for POS_SEL.).
- Set all other bits to 0.

4.2.14 Apply Brake (BRK_ON: 21H)

Byte	BRK_ON		Description			
	Command	Response				
1	21H	21H	Processing classifications	Control command group	Synchronization classifications	Asynchronous

Byte	BRK_ON		Description			
	Command	Response				
2	–	ALARM	Processing time	Within communications cycle	Subcommand	Cannot be used
3		STATUS	• Turns OFF the brake signal and locks the brake. This command is enabled only while the servo is OFF. • Can be used during phases 2 and 3. • Brake signal output timing 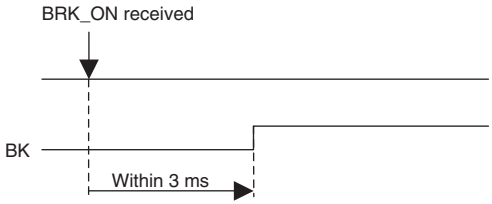 			
4						
5		MONITOR 1				
6						
7						
8						
9		MONITOR 2				
10						
11						
12						
13	SEL_MON 1/2	SEL_MON 1/2				
14	–	IO_MON				
15						
16	WDT	RWDT				

4.2.15 Release Brake (BRK_OFF: 22H)

Byte	BRK_OFF		Description			
	Command	Response				
1	22H	22H	Processing classifications	Control command group	Synchronization classifications	Asynchronous
2	–	ALARM	Processing time	Within communications cycle	Subcommand	Cannot be used
3		STATUS	• Turns ON the brake signal and releases the brake. • Can be used during phases 2 and 3. • Brake signal output timing 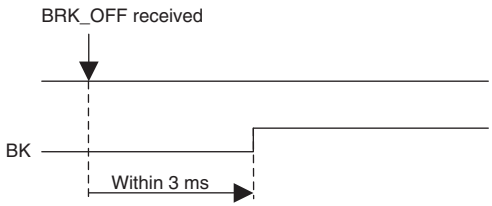 			
4						
5		MONITOR 1				
6						
7						
8						
9		MONITOR 2				
10						
11						
12						
13	SEL_MON 1/2	SEL_MON 1/2				
14	–	IO_MON				
15						
16	WDT	RWDT				

IMPORTANT

BRK_ON and BRK_OFF become always valid as commands unless a warning occurs.
If a BRK_OFF command is sent while power is being supplied to the servomotor, the servomotor continues running.
However, if a Servo OFF command is sent later, the brake will remain released because the BRK_OFF command is valid and may cause a critical situation.
When using a BRK_ON or BRK_OFF command, always keep in mind the status of the command.

4.2.16 Turn Sensor ON (SENS_ON: 23H)

Byte	SENS_ON		Description			
	Command	Response				
1	23H	23H	Processing classifications	Control command group	Synchronization classifications	Asynchronous
2	–	ALARM	Processing time	Within 1 s	Subcommand	Cannot be used
3		STATUS	• Obtains the initial position data and creates the present position. • Can be used during phases 2 and 3.			
4						
5		MONITOR 1				
6						
7						
8						
9		MONITOR 2				
10						
11						
12						
13	SEL_MON 1/2	SEL_MON 1/2				
14	–	IO_MON				
15						
16	WDT	RWDT				

4.2.17 Turn Sensor OFF (SENS_OFF: 24H)

Byte	SENS_OFF		Description			
	Command	Response				
1	24H	24H	Processing classifications	Control command group	Synchronization classifications	Asynchronous
2	–	ALARM	Processing time	Within 1 s	Subcommand	Cannot be used
3		STATUS	• The reference point, home position (ZPOINT), and software limits will be disabled. • Can be used during phases 2 and 3. • A warning will occur and the command will be ignored in the following case. -While the SERVOPACK is servo ON: Command warning 1 (A.95A)			
4						
5		MONITOR 1				
6						
7						
8						
9		MONITOR 2				
10						
11						
12						
13	SEL_MON 1/2	SEL_MON 1/2				
14	–	IO_MON				
15						
16	WDT	RWDT				

4.2.18 Stop Motion (HOLD: 25H)

Byte	HOLD		Description			
	Command	Response				
1	25H	25H	Processing classifications	Motion command group	Synchronization classifications	Asynchronous
2	–	ALARM	Processing time	Within communications cycle	Subcommand	Can be used
3	OPTION	STATUS	• Stops the servomotor for positioning according to the stop method set in HOLD_MOD. • From current motion status, performs a deceleration stop and positioning according to the deceleration speed set in the parameters. • The stop method can be selected using HOLD_MOD. 0: Decelerate to a stop according to the deceleration parameter. 1: Stop immediately (output stop). • Can be used during phases 2 and 3. • OPTION field cannot be used. Set all bits to 0. • Use DEN (output complete) to confirm position data output completion. • Latch processing, which is dependent on LATCH, EX_POSING will be cancelled. • ZRET latch processing and ZRET home position alignment will be cancelled. • Upon completion of this command, the reference position (POS) must be read, and the controller coordinate system must be set up. • The modal latch mode set by LTMOD_ON command stays effective.			
4						
5	HOLD_MOD	MONITOR1				
6	–					
7						
8						
9		MONITOR2				
10						
11						
12						
13	SEL_MON 1/2	SEL_MON 1/2				
14	–	IO_MON				
15						
16	WDT	RWDT				
17	For sub-commands.	For sub-commands.				
18						
19						
20						
21						
22						
23						
24						
25						
26						
27						
28						
29						

■ Related Parameters

Parameter No.	Description
Pn80E	Linear Deceleration Parameter

4.2.19 Request Latch Mode (LTMOD_ON: 28H)

Byte	LTMOD_ON		Description			
	Command	Response				
1	28H	28H	Processing classifications	Control command group	Synchronization classifications	Asynchronous
2	LT_SGN	ALARM	Processing time	Within communications cycle	Subcommand	Cannot be used
3	–	STATUS	• Sets the modal latch mode. If a latch signal is input during modal latch mode, position latching will be performed. • Can be used during phases 2 and 3. • A latch signal can be selected using LT_SGN. Refer to Latch Signal Field Specifications (LT_SGN). • Use CMDRDY = 1 to confirm that the Request Latch Mode command has been received. • Confirm that L_CMP is 1 in STATUS at the completion of latching. -When there is monitor data such as SMON or POSING appended to the command response, LPOS is forcefully returned to MONITOR2. -When there is no monitor data such as PRM_RD or ALM_RD appended to the command response, confirm that L_CMP is 1 in STATUS, then use a command that has monitor data such as SMON in the response and select LPOS to confirm. • Once the latch operation has been performed, it will not be performed again even if a latch signal is input. Send a LTMOD_OFF command and then send a new LTMOD_ON command. • Interference with another latch mode command -During the execution of a command such as LATCH, ZRET, or EX_POSING, the LTMOD_ON command cannot be used. If this command is used during the execution of these commands, the Command warning 4 (A.95D) will occur.			
4						
5		MONITOR1				
6						
7						
8						
9		MONITOR2				
10						
11						
12						
13	SEL_MON 1/2	SEL_MON 1/2				
14	–	IO_MON				
15						
16	WDT	RWDT				
17	For sub-commands.	For sub-commands.				
18						
19						
20						
21						
22						
23						
24						
25						
26						
27						
28						
29						

■ Related Parameters

Parameter No.	Description
Pn820	Latching Area Upper Limit
Pn822	Latching Area Lower Limit

4.2.20 Release Latch Mode (LTMOD_OFF: 29H)

Byte	LTMOD_OFF		Description			
	Command	Response				
1	29H	29H	Processing classifications	Control command group	Synchronization classifications	Asynchronous
2	–	ALARM	Processing time	Within communications cycle	Subcommand	Cannot be used
3	–	STATUS	• Releases the modal latch mode. • Can be used during phases 2 and 3. • Check that CMDRDY is 1 to confirm that the Release Latch Mode command has been received. • Interference with another latch mode command -During the execution of a command such as LATCH, ZRET, or EX_POSING, the LTMOD_OFF command cannot be used. If this command is used during the execution of these commands, the Command warning 4 (A.95D) will occur.			
4						
5		MONITOR1				
6						
7						
8						
9		MONITOR2				
10						
11						
12						
13	SEL_MON 1/2	SEL_MON 1/2				
14	–	IO_MON				
15						
16	WDT	RWDT				
17	For sub-commands.	For sub-commands.				
18						
19						
20						
21						
22						
23						
24						
25						
26						
27						
28						
29						

4.2.21 Status Monitoring (SMON: 30H)

Byte	SMON		Description			
	Command	Response				
1	30H	30H	Processing classifications	Data communications command group	Synchronization classifications	Asynchronous
2	–	ALARM	Processing time	Within communications cycle	Subcommand	Can be used
3		STATUS	• Reads the current status of the SERVOPACK. • Can be used during phases 2 and 3.			
4						
5		MONITOR1				
6						
7						
8						
9		MONITOR2				
10						
11						
12						
13	SEL_MON 1/2	SEL_MON 1/2				
14	–	IO_MON				
15						
16	WDT	RWDT				
17	For sub-commands.	For sub-commands.				
18						
19						
20						
21						
22						
23						
24						
25						
26						
27						
28						
29						

4.2.22 Servo ON (SV_ON: 31H)

Byte	SV_ON		Description			
	Command	Response				
1	31H	31H	Processing classifications	Control command group	Synchronization classifications	Asynchronous
2	–	ALARM	Processing time	Within 50 ms	Subcommand	Can be used
3	OPTION	STATUS	• Turns ON the power to the motor. • Can be used during phases 2 and 3. • A warning will occur and the command will be ignored in the following cases. -During alarm occurrence (when ALM of STATUS is 1): Command warning 1 (A.95A) -If the main power supply turns OFF (when PON of STATUS is 0): Command warning 1 (A.95A) -If the emergency stop switch input turns ON (when E-STP of IO_MON is 1): Command warning 1 (A.95A) • OPTION field cannot be used. Set all bits to 0. • Upon completion of this command, the reference position (POS) must be read, and the controller coordinate system must be set up. • If a SV_ON command is sent when the servo has been already turned ON from CX-Drive, the Servo ON Reference Invalid Alarm (A.0b0) will occur.			
4						
5	–	MONITOR1				
6						
7						
8						
9		MONITOR2				
10						
11						
12						
13	SEL_MON 1/2	SEL_MON 1/2				
14	–	IO_MON				
15						
16	WDT	RWDT				
17	For sub-commands.	For sub-commands.				
18						
19						
20						
21						
22						
23						
24						
25						
26						
27						
28						
29						

4.2.23 Servo OFF (SV_OFF: 32H)

Byte	SV_OFF		Description			
	Command	Response				
1	32H	32H	Processing classifications	Control command group	Synchronization classifications	Asynchronous
2	–	ALARM	Processing time	Within 50 ms	Subcommand	Can be used
3		STATUS	• Turns OFF the power to the motor. • Can be used during phases 2 and 3.			
4						
5		MONITOR1				
6						
7						
8						
9		MONITOR2				
10						
11						
12						
13	SEL_MON 1/2	SEL_MON 1/2				
14	–	IO_MON				
15						
16	WDT	RWDT				
17	For sub-commands.	For sub-commands.				
18						
19						
20						
21						
22						
23						
24						
25						
26						
27						
28						
29						

4.2.24 Interpolation Feed (INTERPOLATE: 34H)

Byte	INTERPOLATE		Description			
	Command	Response				
1	34H	34H	Processing classifications	Motion command group	Synchronization classifications	Synchronous
2	–	ALARM	Processing time	Within communications cycle	Subcommand	Can be used
3	OPTION	STATUS	• Starts interpolation feeding every communications cycle. • Can be used during phase 3. • A warning will occur and the command will be ignored in the following cases. -During phase 2: Command warning 1 (A.95A) -If the SERVOPACK is Servo OFF: Command warning 1 (A.95A) -If the output speed [Target position (TPOS) - Current position (IPOS)] exceeds the maximum speed: Data setting warning 2 (A.94B) • OPTION field cannot be used. Set all bits to 0. • The target position (TPOS) is indicated by signed 4 bytes. • Use DEN (output complete) to confirm the completion of position reference output. • For details on interpolation, refer to *6.5.1 INTERPOLATE Related Commands*. • Speed Feed Forward (VFF) cannot be used. If a VFF is input, no compensation for speed feed forward will be applied.			
4						
5	TPOS	MONITOR1				
6						
7						
8						
9	VFF	MONITOR2				
10						
11						
12						
13	SEL_MON 1/2	SEL_MON 1/2				
14	–	IO_MON				
15						
16	WDT	RWDT				
17	For sub-commands.	For sub-commands.				
18						
19						
20						
21						
22						
23						
24						
25						
26						
27						
28						
29						

4.2.25 Positioning (POSING: 35H)

Byte	POSING		Description			
	Command	Response				
1	35H	35H	Processing classifications	Motion command group	Synchronization classifications	Asynchronous
2	–	ALARM	Processing time	Within communications cycle	Subcommand	Can be used
3	OPTION	STATUS	• Performs positioning at the target position (TPOS) using the target speed (TSPD). • Can be used during phases 2 and 3. • A warning will occur and the command will be ignored in the following cases. -If the SERVOPACK is Servo OFF: Command warning 1 (A.95A) -If the target speed (TSPD) exceeds the maximum speed: Data setting warning 2 (A.94B) • OPTION field cannot be used. Set all bits to 0. • The target position (TPOS) is a signed 4 bytes. It is sent by using an absolute position in the reference coordinate system. • The target speed (TSPD) is an unsigned 4 bytes. It is sent in the range from 0 to the maximum speed [reference unit/s]. • Changes can be made to the target position and target speed during movement. • Use DEN (output complete) to confirm the completion of position reference output. • For details on posing commands, refer to *6.5.2 POSING Related Commands*.			
4						
5	TPOS	MONITOR1				
6						
7						
8						
9	TSPD	MONITOR2				
10						
11						
12						
13	SEL_MON 1/2	SEL_MON 1/2				
14	–	IO_MON				
15						
16	WDT	RWDT				
17	For sub-commands.	For sub-commands.				
18						
19						
20						
21						
22						
23						
24						
25						
26						
27						
28						
29						

■ Related Parameters

Parameter No.	Description
Pn80B	Linear Acceleration Parameter
Pn80E	Linear Deceleration Parameter

4.2.26 Constant Speed Feed (FEED: 36H)

Byte	FEED		Description			
	Command	Response				
1	36H	36H	Processing classifications	Motion command group	Synchronization classifications	Asynchronous
2	–	ALARM	Processing time	Within communications cycle	Subcommand	Can be used
3	OPTION	STATUS	• Performs constant speed feeding using the target speed (TSPD). The servo performs constant speed feeding by position control. Use the Stop Motion command (HOLD: 25H) to stop the constant speed feeding. • Can be used during phases 2 and 3. • A command warning will occur and the command will be ignored in the following cases. -If the SERVOPACK is Servo OFF: Command warning 1 (A.95A) -If the target speed (TSPD) exceeds the maximum speed: Data setting warning 2 (A.94B) • OPTION field cannot be used. Set all bits to 0. • The target speed (TSPD) is a signed 4 bytes. The direction is determined by the sign. The target speed is sent in the range from a negative maximum speed to a positive maximum speed [reference unit/s]. • Changes can be made to the target speed during movement. • Use DEN (output complete) to confirm the completion of position reference output. • For details on posing commands, refer to *6.5.2 POSING Related Commands* for details on the operation.			
4						
5	–	MONITOR1				
6						
7						
8						
9	TSPD	MONITOR2				
10						
11						
12						
13	SEL_MON 1/2	SEL_MON 1/2				
14	–	IO_MON				
15						
16	WDT	RWDT				
17	For sub-commands.	For sub-commands.				
18						
19						
20						
21						
22						
23						
24						
25						
26						
27						
28						
29						

■ Related Parameters

Parameter No.	Description
Pn80B	Linear Acceleration Parameter

4.2.27 Interpolation Feeding with Position Detection (LATCH: 38H)

Byte	LATCH		Description			
	Command	Response				
1	38H	38H	Processing classifications	Motion command group	Synchronization classifications	Synchronous
2	LT_SGN	ALARM	Processing time	Within communications cycle	Subcommand	Can be used
3	OPTION	STATUS	• Performs interpolation feeding and latches the position using the latch signal specified in LT-SGN. • If the latch signal is input, the position when the signal is received is recorded as the feedback latch position (LPOS) of the machine coordinate system, and the LPOS will forcibly be indicated as the MONITOR2 for one communications cycle. • Can be used during phase 3. • A command warning will occur and the command will be ignored in the following cases. -During phase 2: Command warning 1 (A.95A) -If the SERVOPACK is Servo OFF: Command warning 1 (A.95A) -If the output speed [the target position (TPOS) - the current position (IPOS)] exceeds the maximum speed: Data setting warning 2 (A.94B) • LT_SGN can be used. Refer to *4.5.1 Latch Signal Field Specifications: LT_SGN* (LT_SGN). • OPTION field cannot be used. Set all bits to 0. • Speed Feed Forward (VFF) cannot be used. If a VFF is input, no compensation for speed feed forward will be applied. • Use DEN (output complete) to confirm the motion completion. • For details on interpolation, refer to *6.5.1 INTERPOLATE Related Commands*.			
4						
5	TPOS	MONITOR1				
6						
7						
8						
9	VFF	MONITOR2				
10						
11						
12						
13	SEL_MON 1/2	SEL_MON 1/2				
14	–	IO_MON				
15						
16	WDT	RWDT				
17	For sub-commands.	For sub-commands.				
18						
19						
20						
21						
22						
23						
24						
25						
26						
27						
28						
29						

■ Related Parameters

Parameter No.	Description
Pn820	Latching Area Upper Limit
Pn822	Latching Area Lower Limit

4.2.28 External Input Positioning (EX_POSING: 39H)

Byte	EX_POSING		Description			
	Command	Response				
1	39H	39H	Processing classifications	Motion command group	Synchronization classifications	Asynchronous
2	LT_SGN	ALARM	Processing time	Within communications cycle	Subcommand	Can be used
3	OPTION	STATUS	• Moves toward the target position (TPOS) at the target speed (TSPD). When a latch signal is input midway, positioning is performed according to the final travel distance for external position specified in the parameter from the latch signal input position. When no latch signal is input, positioning is performed for the target position (TPOS). • Can be used during phases 2 and 3. • A command warning will occur and the command will be ignored in the following cases. -If the SERVOPACK is Servo OFF: Command warning 1 (A.95A) -If the target speed (TSPD) exceeds the maximum speed : Data setting warning 2 (A.94B) • OPTION field cannot be used. Set all bits to 0. • The target position (TPOS) is a signed 4 bytes [reference unit]. It is sent by using an absolute position in the reference coordinate system. • The target speed (TSPD) is an unsigned 4 bytes. It is sent in the range from 0 to the maximum speed [reference unit/s]. • After the latch is input, any changes to the target position during motion will be ignored. • Use DEN (output complete) to confirm the completion of position reference output. • For details on posing commands, refer to *6.5.2 POSING Related Commands*.			
4						
5	TPOS	MONITOR1				
6						
7						
8						
9	TSPD	MONITOR2				
10						
11						
12						
13	SEL_MON 1/2	SEL_MON 1/2				
14	–	I/O_MON				
15						
16	WDT	RWDT				
17	For sub-commands.	For sub-commands.				
18						
19						
20						
21						
22						
23						
24						
25						
26						
27						
28						
29						

■ Related Parameters

Parameter No.	Description
Pn80B	Linear Acceleration Parameter
Pn80E	Linear Deceleration Parameter
Pn814	Final Travel Distance for External Positioning
Pn820	Latching Area Upper Limit
Pn822	Latching Area Lower Limit

■ Operation

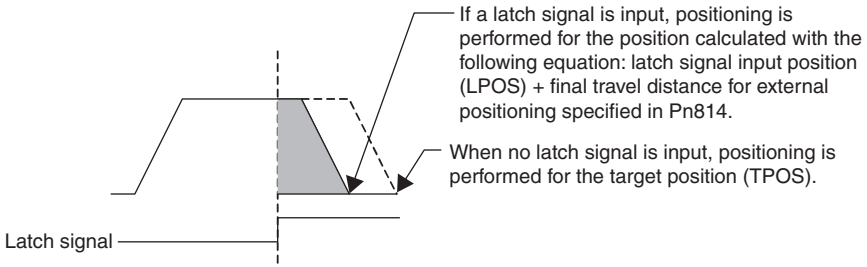

4.2.29 Homing (ZRET: 3AH)

Byte	ZRET		Description			
	Command	Response				
1	3AH	3AH	Processing classifications	Motion command group	Synchronization classifications	Asynchronous
2	LT_SGN	ALARM	Processing time	Within communications cycle	Subcommand	Can be used

<table>
<tr><th rowspan="2">Byte</th><th colspan="2">ZRET</th><th rowspan="2">Description</th></tr>
<tr><th>Command</th><th>Response</th></tr>
<tr><td>3</td><td rowspan="2">OPTION</td><td rowspan="2">STATUS</td><td rowspan="29">• Perform a homing using the following sequence.
1. Accelerates to the target speed (TSPD) in the direction specified in the parameter (Pn816) and continues to move at the target speed.
2. Decelerates to homing approach speed 1 (Pn817) at the DEC = 1.
3. Latch operation will start at the DEC = 0.
4. When a latch signal is input, positioning is performed to define the target position at the homing approach speed 2 (Pn818). The target position is calculated by adding the homing final travel distance (Pn819). After the completion of positioning, the coordinate system is set so that the position reached is 0.
• Can be used during phases 2 and 3.
• A command warning will occur and the command will be ignored in the following cases.
-If the SERVOPACK is Servo OFF: Command warning 1 (A.95A)
-If the target speed (TSPD) exceeds the maximum speed: Data setting warning 2 (A.94B)
• OPTION field cannot be used. Set all bits to 0.
• The target speed (TSPD) is an unsigned 4 bytes. It is sent in the range from 0 to the maximum speed [reference unit/s].
• Before DEC is input, the target speed during motion can be changed.
• Use DEN (output complete) and ZPOINT (home position) to confirm the completion of position reference output.</td></tr>
<tr><td>4</td></tr>
<tr><td>5</td><td rowspan="4">–</td><td rowspan="4">MONITOR1</td></tr>
<tr><td>6</td></tr>
<tr><td>7</td></tr>
<tr><td>8</td></tr>
<tr><td>9</td><td rowspan="4">TSPD</td><td rowspan="4">MONITOR2</td></tr>
<tr><td>10</td></tr>
<tr><td>11</td></tr>
<tr><td>12</td></tr>
<tr><td>13</td><td>SEL_MON 1/2</td><td>SEL_MON 1/2</td></tr>
<tr><td>14</td><td rowspan="2">–</td><td rowspan="2">IO_MON</td></tr>
<tr><td>15</td></tr>
<tr><td>16</td><td>WDT</td><td>RWDT</td></tr>
<tr><td>17</td><td rowspan="13">For sub-commands.</td><td rowspan="13">For sub-commands.</td></tr>
<tr><td>18</td></tr>
<tr><td>19</td></tr>
<tr><td>20</td></tr>
<tr><td>21</td></tr>
<tr><td>22</td></tr>
<tr><td>23</td></tr>
<tr><td>24</td></tr>
<tr><td>25</td></tr>
<tr><td>26</td></tr>
<tr><td>27</td></tr>
<tr><td>28</td></tr>
<tr><td>29</td></tr>
</table>

■ Related Parameters

Parameter No.	Description
Pn80B	Linear Acceleration Parameter
Pn80E	Linear Deceleration Parameter
Pn816	Homing Direction
Pn817	Homing Approach Speed 1
Pn818	Homing Approach Speed 2
Pn819	Final Travel Distance for Homing
Pn820	Latching Area Upper Limit
Pn822	Latching Area Lower Limit

■ Operation

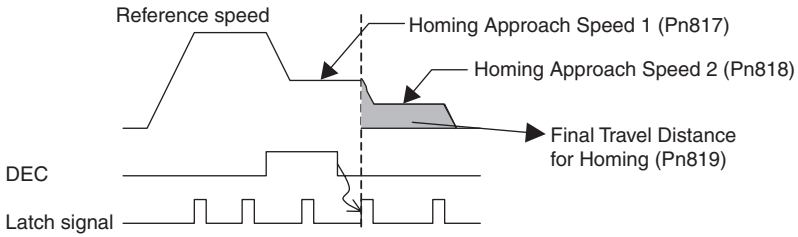

4.2.30 Adjusting (ADJ: 3EH)

Byte	ADJ		Description			
	Command	Response				
1	3EH	3EH	Processing classifications	Data communications command group	Synchronization classifications	Asynchronous
2	SUBCODE	ALARM	Processing time	Depends on processing	Subcommand	Cannot be used

Byte	ADJ		Description
	Command	Response	
3	–	STATUS	• This command is for maintenance. Parameter initialization can be done. • Use as SUBCODE = 01H. • Refer to the next page, for the way to use set this command. • A command warning will occur and the command will be ignored in the following cases. -If parameters are changed mid-operation with CX-Drive: Command warning 1 (A.95A) -If CADDRESS is out of the range: Parameter setting warning (A.94A) -If CSIZE does not match: Parameter setting warning (A.94D) -If CCMD or CDATA is out of the range: Parameter setting warning (A.94B)
4			
5	CCMD	CANS	
6			
7	CAD-DRESS	CAD-DRESS	
8			
9	CSIZE	CSIZE/ ERRCODE	
10			
11	CDATA	CDATA	
12			
13			
14			
15			
16	WDT	RWDT	

■ Setting Parameter Initialization Mode Using ADJ Commands

Use the following procedure to select an operation mode.

1. Set to “Parameter Initialization” mode.

   Set the command fields to the following settings.
   SUBCODE = 01H (fixed)
   CCMD = 0004H (data setting: fixed)
   CADDRESS = 2000H (operation mode address = 2000H: fixed)
   CSIZE = 0002H (size = 2H: fixed)
   CDATA = 1005H (operation mode = 1005H: fixed)
   After sending the data, wait until CMDRDY of STATUS is equal to 1, and check ERRCODE to confirm that no error occurred.

2. Execute the parameter initialization.

   Set the command fields to the following settings.
   SUBCODE = 01H (fixed)
   CCMD = 0004H (data setting: fixed)
   CADDRESS = 2001H (operation mode address = 2001H: fixed)
   CSIZE = 0002H (size = 2H: fixed)
   CDATA = 0001H (operation mode execution 0001H: fixed)
   After sending the data, wait until CMDRDY of STATUS is equal to 1, and check ERRCODE to confirm that no error occurred.

3. Set to “Normal mode” after execution.

   Set the command fields to the following settings.
   SUBCODE = 01H (fixed)
   CCMD = 0004H (data setting: fixed)
   CADDRESS = 2000H (operation mode address = 2000H: fixed)
   CSIZE = 0002H (size = 2H: fixed)
   CDATA = 0000H (normal mode: fixed)
   When CMDRDY of STATUS changes to 1, the execution is completed.

4.3 Subcommands

This section describes the MECHATROLINK-II subcommands applicable with SJDE-□□ANA-OY SERVOPACK.
The MECHATROLINK-II subcommands can be used by specifying them with the CONNECT command when MECHATROLINK-II communications starts.
They use the seventeenth to the twenty-ninth bytes of the command and response data.

4.3.1 No Operation (NOP: 00H)

Byte	NOP		Description			
	Command	Response				
17	00H	00H	Processing classifications	Network command group	Processing time	Within communications cycle
18	–	SUBSTATUS	• Not operation command.			
19						
20						
21						
22						
23						
24						
25						
26						
27						
28						
29						

4.3.2 Read Parameter (PRM_RD: 01H)

Byte	PRM_RD		Description			
	Command	Response				
17	01H	01H	Processing classifications	Data communications command group	Processing time	Within 100 ms
18	-	SUBSTATUS	• Reads a parameter. This command has the same function as the main command PRM_RD.			
19	NO	NO				
20						
21	SIZE	SIZE				
22	-	PARAMETER				
23						
24						
25						
26						
27						
28						
29						

4.3.3 Write Parameter (PRM_WR: 02H)

Byte	PRM_WR		Description			
	Command	Response				
17	02H	02H	Processing classifications	Data communications command group	Processing time	Within 100 ms
18	–	SUBSTATUS	• Writes a parameter. This command has the same function as the main command PRM_WR.			
19	NO	NO				
20						
21	SIZE	SIZE				
22	PARAMETER	PARAMETER				
23						
24						
25						
26						
27						
28						
29						

4.3.4 Read Alarm or Warning (ALM_RD: 05H)

Byte	ALM_RD		Description			
	Command	Response				
17	05H	05H	Processing classifications	Data communications command group	Processing time	6 ms to 2 s
18	-	SUBSTATUS	• Reads the alarm or warning. This command has the same function as the main command ALM_RD.			
19	ALM_RD_MOD	ALM_RD_MOD				
20	-	ALM_DATA				
21						
22						
23						
24						
25						
26						
27						
28						
29						

4.3.5 Write Stored Parameter (PPRM_WR: 1CH)

Byte	PPRM_WR		Description			
	Command	Response				
17	1CH	1CH	Processing classifications	Data communications command group	Processing time	Within 200 ms
18	-	SUBSTATUS	• Writes a parameter. This command has the same function as the main command PPRM_WR.			
19	NO	NO				
20						
21	SIZE	SIZE				
22	PARAMETER	PARAMETER				
23						
24						
25						
26						
27						
28						
29						

4.3.6 Request Latch Mode (LTMOD_ON: 28H)

Byte	LTMOD_ON		Description			
	Command	Response				
17	28H	28H	Processing classifications	Control command group	Processing time	Within communications cycle
18	LT_SGN	SUBSTATUS	• Sets the modal latch mode. This command has the same function as the main command LTMOD_ON.			
19	SEL_MON 3/4	SEL_MON 3/4				
20	-	MONITOR3				
21						
22						
23						
24		MONITOR4				
25						
26						
27						
28	-	-				
29						

4.3.7 Release Latch Mode (LTMOD_OFF: 29H)

Byte	LTMOD_OFF		Description			
	Command	Response				
17	29H	29H	Processing classifications	Control command group	Processing time	Within communications cycle
18	-	SUBSTATUS	• Releases the modal latch mode. This command has the same function as the main command LTMOD_OFF.			
19	SEL_MON 3/4	SEL_MON 3/4				
20	-	MONITOR3				
21						
22						
23						
24		MONITOR4				
25						
26						
27						
28	-	-				
29						

4.3.8 Status Monitoring (SMON: 30H)

Byte	SMON		Description			
	Command	Response				
17	30H	30H	Processing classifications	Data communications command group	Processing time	Within communications cycle
18	-	SUBSTATUS	• Reads the monitoring information specified in SEL_MON3/4. This command has the same function as the main command SMON.			
19	SEL_MON 3/4	SEL_MON 3/4				
20	-	MONITOR3				
21						
22						
23						
24		MONITOR4				
25						
26						
27						
28	-	-				
29						

4.4 Combination of MECHATROLINK-II Main Commands and Subcommands

MECHATROLINK-II subcommands can be used by combining as listed below.

Code	Main Command	Subcommand							
		NOP	PRM_RD	PRM_WR	ALM_RD	PPRM_WR	LTMOD_ON	LTMOD_OFF	SMON
00	NOP	✓	✓	✓	✓	✓	✓	✓	✓
01	PRM_RD	✓	×	×	×	×	×	×	✓
02	PRM_WR	✓	×	×	×	×	×	×	✓
03	ID_RD	✓	✓	✓	✓	✓	✓	✓	✓
04	CONFIG	✓	×	×	×	×	×	×	✓
05	ALM_RD	✓	×	×	×	×	×	×	✓
06	ALM_CLR	✓	×	×	×	×	×	×	✓
0D	SYNC_SET	✓	×	×	×	×	×	×	✓
0E	CONNECT	✓	×	×	×	×	×	×	✓
0F	DISCON-NECT								
1C	PPRM_WR	✓	×	×	×	×	×	×	✓
20	POS_SET	✓	×	×	×	×	×	×	✓
21	BRK_ON	✓	×	×	×	×	×	×	✓
22	BRK_OFF	✓	×	×	×	×	×	×	✓
23	SENS_ON	✓	×	×	×	×	×	×	✓
24	SENS_OFF	✓	×	×	×	×	×	×	✓
25	HOLD	✓	✓	✓	✓	✓	✓	✓	✓
28	LTMOD_ON	✓	×	×	×	×	×	×	✓
29	LTMOD_OFF	✓	×	×	×	×	×	×	✓
30	SMON	✓	✓	✓	✓	✓	✓	✓	✓
31	SV_ON	✓	✓	✓	✓	✓	✓	✓	✓
32	SV_OFF	✓	✓	✓	✓	✓	✓	✓	✓
34	INTERPO-LATE	✓	✓	✓	✓	✓	✓	✓	✓
35	POSING	✓	✓	✓	✓	✓	✓	✓	✓
36	FEED	✓	✓	✓	✓	✓	✓	✓	✓
38	LATCH	✓	✓	✓	✓	✓	×	×	✓
39	EX_POSING	✓	✓	✓	✓	✓	×	×	✓
3A	ZRET	✓	✓	✓	✓	✓	×	×	✓

Note: ✓: Can be combined.
×: Cannot be combined.

IMPORTANT

If a command with a subcommand that cannot be combined is received, the warning A.95d or A.95E (see *8.3.2 Warning Display and Troubleshooting* for details.) will occur, and the command will be ignored.
The servo is not OFF and the servomotor is not stopped if a command with a subcommand that cannot be combined is received during operation.

4.5 Command Data Field

This section describes command data in main commands and subcommands.

4.5.1 Latch Signal Field Specifications: LT_SGN

The latch signal field specifications (LT_SGN) can be designated using the following commands:
LATCH, EX_POSING, ZRET, LTMOD_ON

The latch signal field is used to select latch signals for position data, with the second byte of the above main commands, or the eighteenth byte reserved area of the subcommands.
Refer to the following table for details on bit allocation.

■ Latch Signal Field

D7	D6	D5	D4	D3	D2	D1	D0
–	–	–	–	–	–	LT_SGN	

Latch Signal Selection

D1	D0	Latch Signal
0	0	Phase Z
0	1	/EXT1
1	0	Reserved
1	1	Reserved

INFO Set 0 for unused bits.

4.5.2 Option Field Specifications: OPTION

The option field cannot be used. Set 0 for all bits.
Refer to the following table for details on bit allocation.

■ Option Field

D7	D6	D5	D4	D3	D2	D1	D0
0	0	0	0	0	0	0	0

D15	D14	D13	D12	D11	D10	D9	D8
0	0	0	0	0	0	0	0

4.5.3 Status Field Specifications: STATUS

The status field is used to monitor the Servo status with the third to fourth byte reserved area of the main commands.
Refer to the following table for details on bit allocation.

■ Status Field

D7	D6	D5	D4	D3	D2	D1	D0
PSET	ZPOINT	–	PON	SVON	CMDRDY	WARNG	ALM

D15	D14	D13	D12	D11	D10	D9	D8
–	–	N_SOT	P_SOT	NEAR	L_CMP	T_LIM	DEN

Alarm (ALM)

Indicates alarm occurrence.

D0	Status
0	No alarm (Normal)
1	Alarm occurred.

Warning (WARNG)

Indicates the warning occurrence.

D1	Status
0	No warning (Normal)
1	Warning occurred.

Command ready (CMDRDY)

Indicates whether the command can be received or not.
No command can be received if the SERVOPACK is in busy status. The SERVOPACK will continue executing the previously received command.

D2	Status
0	Command cannot be received (busy).
1	Command can be received (ready).

Servo ON (SVON)

Indicates the servo ON/OFF status.

D3	Status
0	Servo OFF
1	Servo ON

Main power supply ON (PON)

Indicates the status of the main power supply.

D4	Status
0	Main power supply OFF
1	Main power supply ON

INFO D4 will remain set to 0 and the main power supply will be turned OFF for a maximum of 300 ms.

Home position (ZPOINT)

Indicates if the feedback position (APOS) is within or outside the home position range.

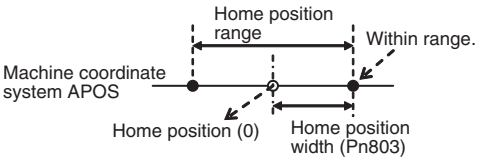

D6	Status
0	The feedback position (APOS) is within the home position range.
1	The feedback position (APOS) is outside the home position range.

The home position range can be set in the following parameter.
The setting will be immediately written in the SERVOPACK.

Parameter No.	Name	Data Size	Min. Set Value	Max. Set Value	Units	Factory Setting
Pn803	Home position range	2 bytes	0	250	Reference unit	10

INFO After completion of the following operations, a ZPOINT signal should be detected. If not, the operation was not successfully completed.

1. Homing (ZRET) operation
2. Coordinates setting by having set the reference point (REFE=1) by using POS_SET (coordinates setting)

Positioning completion (PSET)

Indicates the completion of positioning.

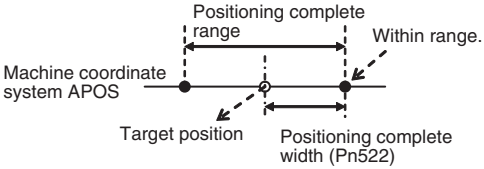

D7	Status
0	Other than the status 1.
1	Output completion (DEN = 1) and the feedback position (APOS) are within the positioning complete range.

The positioning complete width can be set in the following parameter.
The setting will be immediately written in the SERVOPACK.

Parameter No.	Name	Data Size	Min. Set Value	Max. Set Value	Units	Factory Setting
Pn522	Positioning complete width	4 bytes	0	1073741824	Reference unit	10

Output completion (DEN)

Indicates the output completion.

D8	Status
0	While outputting position reference.
1	Position reference output completed. No position reference output, and the reference position (POS) agrees with the target position TPOS.

INFO

DEN = 1 for move commands without the movement distance specified.

Torque limit (T_LIM)

Indicates if the torque is being limited or not.

D9	Status
0	Torque limited.
1	Torque not limited.

Latch completion (L_CMP)

Indicates the latch completion status.

D10	Status
0	Latch not completed.
1	Latch completed (During execution of latch-related command).

INFO

When the power supply is turned ON, the setting of D10 changes to 0.
If a LATCH or EX_POSING command is changed to another command, latching is cancelled and the setting of D10 is changed to 1.

Positioning proximity (NEAR)

Indicates whether the feedback position (POS) is within or out of the positioning proximity range.

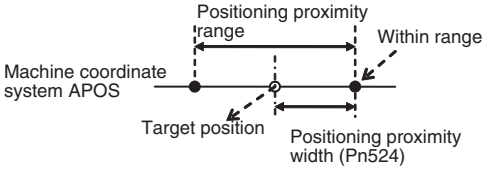

D11	Status
0	The feedback position (APOS) is outside the positioning proximity range.
1	The feedback position (APOS) is within the positioning proximity range.

The positioning proximity width can be set in the following parameter.
The setting will be immediately written to the SERVOPACK.

Parameter No.	Name	Data Size	Min. Set Value	Max. Set Value	Units	Factory setting
Pn524	Positioning proximity	4 bytes	0	1073741824	reference unit	100

Software limits (P_SOT and N_SOT)

Indicates the status of the forward/reverse software limit.
Refer to *6.6 Software Limit Function* for details.

D12	Status (P_SOT)
0	Outside forward software limit range
1	Within forward software limit range

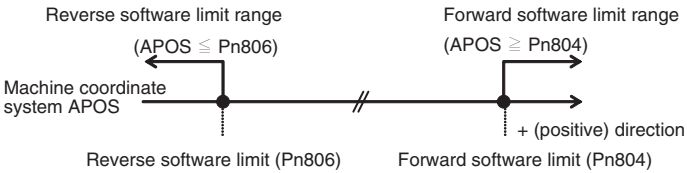

D13	Status (N_SOT)
0	Outside reverse software limit range
1	Within reverse software limit range

INFO

After completion of the following operations, the software limit function will be enabled.
1. Homing (ZRET) operation
2. Coordinates setting by having set the reference point (REFE=1) by using POS_SET (coordinates setting)

4.5.4 Monitor Selection and Monitor Information Field Specifications: SEL_MON1/2/3/4, MONITOR1/2/3/4

The monitor selection and monitor information field specifications (SEL_MON*, MONITOR*) can be designated using the following main commands:
SV_ON, SV_OFF, HOLD, INTERPOLATE, POSING, FEED, LATCH, EX_POSING, ZRET, SMON, SENS_ON, SENS_OFF, BRK_ON, BRK_OFF, LTMOD-ON, LTMOD-OFF

The monitor selection and monitor information field is used to select the Servo monitor information and monitor it, with the thirteenth byte of the above main commands, or the twenty-seventh byte reserved area of the subcommands.

■ SEL_MON1/2/3/4 Field

D7	D6	D5	D4	D3	D2	D1	D0
SEL_MON2				SEL_MON1			

D7	D6	D5	D4	D3	D2	D1	D0
SEL_MON4				SEL_MON3			

■ MONITOR1/2/3/4 Monitor Codes

Monitor Codes*	Name	Description	Unit
0	POS	Reference position (position after reference filter procedure)	Reference units
1	MPOS	Reference position	Reference units
2	PERR	Position error	Reference units
3	APOS	Feedback position	Reference units
4	LPOS	Feedback latch position	Reference units
5	IPOS	Reference position (position before reference filter procedure)	Reference units
6	TPOS	Target position	Reference units
7	–	–	–
8	FSPD	Feedback speed	Reference units/s
9	CSPD	Reference speed	Reference units/s
A	TSPD	Target speed	Reference units/s
B	TRQ	Torque reference (The rated torque is 100%.)	%
C	–	–	–
D	–	–	–
E	–	–	–
F	–	–	–

* For the items to be monitored for the SEL_MON commands (1 to 4), assign their monitor codes to the parameter.

■ Monitor Data

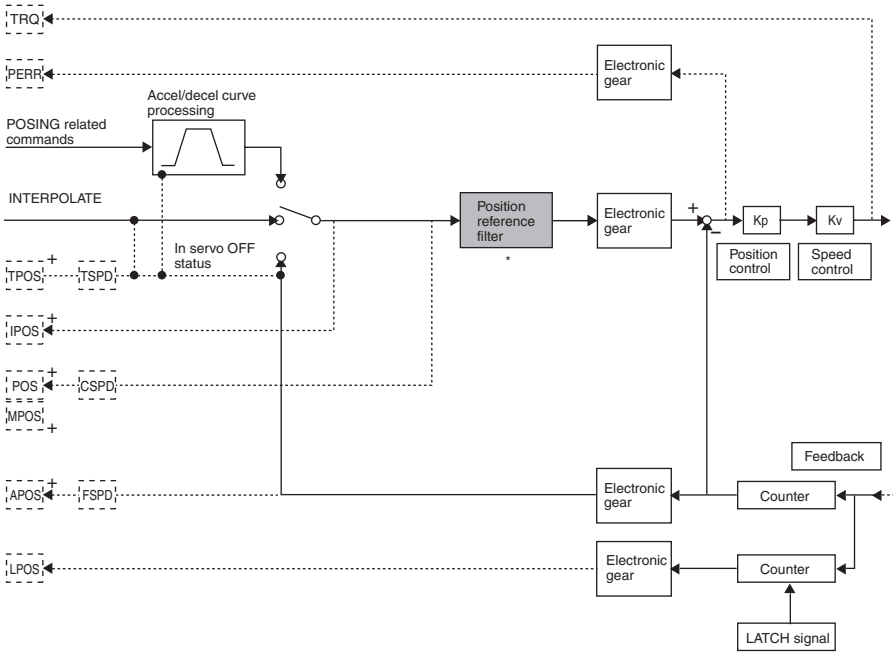

* With a Junma-series SERVOPACK, position reference filter can be set using the FIL rotary switch or Pn00A.

4.5.5 IO Monitor Field Specifications: IO_MON

The IO monitor field specifications (IO_MON) can be designated using the following commands: SMON, SV_ON, SV_OFF, HOLD, INTERPOLATE, FEED, POSING, LATCH, EX_POSING, ZRET, SENS_ON, SENS_OFF, BRK_ON, BRK_OFF, LTMOD-ON, LTMOD-OFF

The IO monitor field is used to monitor the I/O signal status of the SERVOPACK, with the fourteenth to fifteenth byte reserved area of the above main commands.

■ IO Monitor Field

D7	D6	D5	D4	D3	D2	D1	D0
–	/EXT1	–	–	–	/DEC	N-OT	P-OT

D15	D14	D13	D12	D11	D10	D9	D8
–	–	–	–	–	E-STP	/BK	–

Limit switch input signals (P-OT and N-OT)

Indicates the forward and reverse limit switch input status.

D0	Status (P-OT)
0	Forward limit switch input OFF
1	Forward limit switch input ON

D1	Status (N-OT)
0	Reverse limit switch input OFF
1	Reverse limit switch input ON

Deceleration limit switch input signal (/DEC)

Indicates the deceleration limit switch input signal status.

D2	Status
0	Deceleration limit switch input OFF
1	Deceleration limit switch input ON

External latch input signal (/EXT1)

Indicates the first external latch input signal status.
This signal is used to latch data.

D6	Status
0	First external latch input OFF
1	First external latch input ON

Brake output signal (/BK)

Indicates the brake output signal status.

D9	Status
0	Brake output OFF (Releases the brake.)
1	Brake output ON (Locks the brake.)

Emergency stop switch input signal (E-STP)

Indicates the emergency stop switch input signal status.

D10	Status
0	Emergency stop switch input OFF
1	Emergency stop switch input ON

4.5.6 Substatus Field Specifications: SUBSTATUS

The substatus field is used to monitor the subcommand status with the eighteenth byte reserved area of the subcommands.

■ Substatus Field

D7	D6	D5	D4	D3	D2	D1	D0
–	–	–	–	–	SBCM-DRDY	SBWARNG	SBALM

Bit	Name	Description	Set Value	Status
D0	SBALM	Subcommand alarm occurrence	0	None
			1	Alarm occurs.
D1	SBWARNG	Subcommand warning occurrence	0	None
			1	Warning occurs.
D2	SBCMDRDY	Subcommand ready (Subcommand reception enabled)	0	Subcommands cannot be received. (busy)
			1	Subcommand can be received. (ready)

4.5.7 Alarm/Warning Field Specifications: ALARM

The alarm/warning field is the second byte of main command response. The SERVOPACK sets an alarm or warning code in this byte and returns the response.
To monitor detailed information on alarms or warnings, use a command (ALARM_RD: 05H) Read Alarm/Warning or CX-Drive.
Refer to *8.3 Alarm/Warning Display and Troubleshooting* for more information on the causes of alarm/warning as well as corrective actions.

Alarm Display of Response	Alarm Name	Meaning
02H	Parameter Error 0	The data of the parameter in the SERVOPACK is incorrect.
	Parameter Error 1	The data of the parameter in the SERVOPACK is incorrect.
	Parameter Error 2	The data of the parameter in the SERVOPACK is incorrect.
	Parameter Error 3	The data of the parameter in the SERVOPACK is incorrect.
03H	Main Circuit Detector Error	Detection data for the main circuit is incorrect.
04H	Parameter Setting Error	The parameter setting is outside the allowable setting range.
05H	Unsupported Product Alarm	SERVOPACK is faulty.
0bH	Servo ON Reference Invalid Alarm	After the servo ON signal was sent through the CX-Drive, the SV_ON command of the MECHATROLINK-II was sent.
10H	Overcurrent	An overcurrent flowed through the IGBT or the SERVOPACK heat sink was overheated.
28H	Emergency Stop	An emergency stop signal was input while the servomotor were running.
40H	Overvoltage	The main circuit DC voltage is excessively high.
41H	Undervoltage	The power supply was turned ON again before the SERVOPACK power supply was cut off.
51H	Overspeed	The servomotor speed is excessively high.
71H	Overload: High load	The servomotor was operating for several seconds to several tens of seconds under a torque largely exceeding the rating.
72H	Overload: Low load	The servomotor was operating continuously under a torque exceeding the rating.
73H	Dynamic Brake Overload	The servomotor did not stop three seconds or more after the servo was turned OFF.
7AH	Board Overheated	The temperature inside the SERVOPACK increased excessively.
	SERVOPACK Built-in Fan Stop	The SERVOPACK built-in fan stopped.
b3H	Current Detection Error	Servomotor current detector is faulty, or servomotor power line is disconnected.

(cont'd)

Alarm Display of Response	Alarm Name	Meaning
bFH	System Alarm 0	The SERVOPACK is faulty.
	System Alarm 1	The SERVOPACK is faulty.
	System Alarm 2	The SERVOPACK is faulty.
	System Alarm 3	The SERVOPACK is faulty.
	System Alarm 4	The SERVOPACK is faulty.
	System Alarm A	The SERVOPACK is faulty.
C1H	Servo Overrun Detected	The servomotor ran out of control.
C2H	Incorrect Phase Detection	The servomotor phase signal was incorrectly detected.
C5H	Incorrect Polarity Detection	The servomotor polarity signal was incorrectly detected.
C9H	Encoder Signal Error	The amplitude of encoder output signal is faulty.
d0H	Position Error Pulse Overflow	The position error exceeded the parameter.
b6H	MECHATROLINK-II Communication LSI Error	The MECHATROLINK-II communications LSI is faulty.
E0H	MECHATROLINK-II Internal Synchronization Error 1	Synchronization error during MECHATROLINK-II communications with the SERVOPACK.
EAH	MECHATROLINK-II Internal Synchronization Error 2	Synchronization error during MECHATROLINK-II communications with the SERVOPACK.
EDH	MECHATROLINK-II Internal Command Error 0	Command error inside the SERVOPACK.
	MECHATROLINK-II Internal Command Error 1	Command error inside the SERVOPACK.
E4H	MECHATROLINK-II Transmission Cycle Setting Error	The transmission cycle setting for MECHATROLINK-II communications is incorrect.
E5H	MECHATROLINK-II Synchronization Error	Synchronization error during MECHATROLINK-II communications.
	MECHATROLINK-II Synchronization Failed	Failed to establish synchronization during MECHATROLINK-II communications.
E6H	MECHATROLINK-II Communications Error	A communication error occurred during MECHATROLINK-II communications.
	MECHATROLINK-II Transmission Cycle Error	The transmission cycle has changed during MECHATROLINK-II communications.
91A	Overload	This warning occurs before the overload alarm (A.710 or A.720) occurs. If the warning is ignored and operation continues, an overload alarm may occur.

(cont'd)

Alarm Display of Response	Alarm Name	Meaning
94H	MECHATROLINK-II Data Setting Warning 1	An incorrect parameter number was set in the command.
	MECHATROLINK-II Data Setting Warning 2	The command data is out of range.
	MECHATROLINK-II Data Setting Warning 4	Unmatched data size was detected.
95H	MECHATROLINK-II Command Warning 1	A command was sent though the command sending conditions were not satisfied.
	MECHATROLINK-II Command Warning 2	An unsupported command was sent.
	MECHATROLINK-II Command Warning 4	A command, especially latch command, interferes.
	MECHATROLINK-II Command Warning 5	A sub command and main command interfere.
96H	MECHATROLINK-II Communications Warning	A communications error occurred during MECHATROLINK communications.

4.6 Command and Response Timing

This section describes the execution timing for command data and the input timing for monitor data. This timing is constant, regardless of the transmission cycle and communications cycle.

4.6.1 Command Data Execution Timing

Motion commands (POSING, INTERPOLATE) and the OPTION (command data field) are executed 625 μs after they are received.

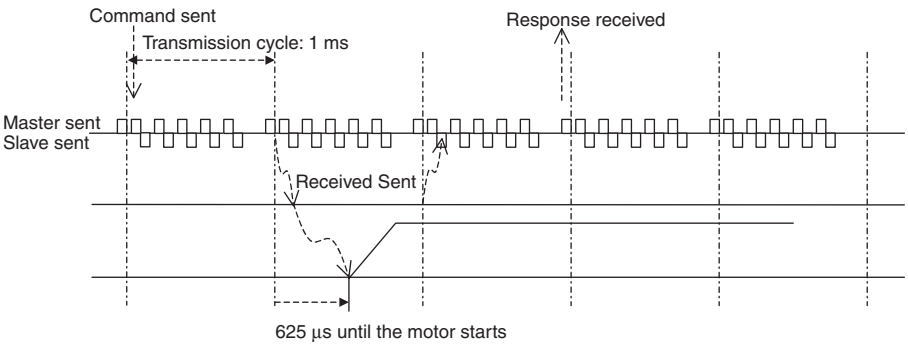

4.6.2 Monitor Data Input Timing

The monitor, I/O, and status data is the data 625 μs before the response is sent.

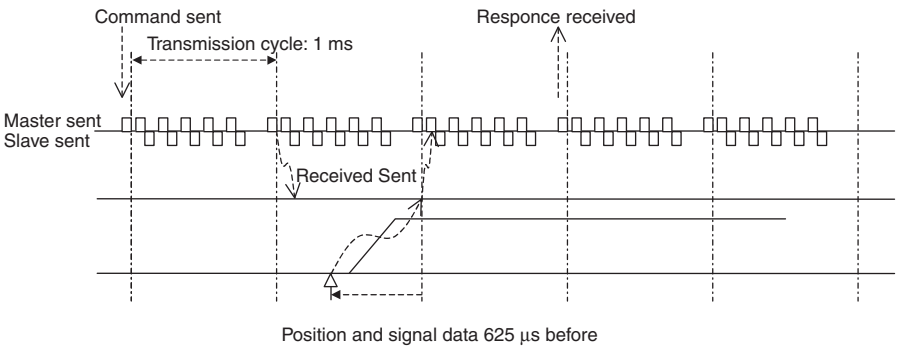

4.7 Operation Sequence

This section describes outline of the operation sequence.
For details of command functions and settings, refer to *4.2 Main Commands* and *4.3 Subcommands*.

4.7.1 Operation Sequence for Managing Parameters Using a Controller

When the parameters are managed by a controller, the parameters are transmitted to a controller when the power is turned ON.
With this operation sequence, the settings of the SERVOPACK do not need to be changed when the SERVOPACK is replaced. The following table shows the procedure.

Procedure	Item	Command	Description	Phase
1	Turn ON control and main circuit power supplies.	NOP/DISCONNECT*	–	1
2	Establish connection.	CONNECT	Establish communications. Start the WDT count.	2 or 3
3	Check information such as device ID.	ID_RD	Read information such as device type.	2 or 3
4	Set device.	PRM_WR	Set the necessary parameters.	2 or 3
5	Set up device.	CONFIG	Enable the parameter settings.	2 or 3
6	Turn ON encoder.	SENS_ON	Turn ON encoder and obtain the position data.	2 or 3
7	Operate main circuit.	SV_ON	Turn ON servomotor.	2 or 3
8	Start operation.	–	–	2 or 3
9	Turn OFF servomotor.	SV_OFF	Turn OFF servomotor.	2 or 3
10	Disconnect connection.	DISCONNECT	Disconnect communications.	4 to 1
11	Turn OFF control and main circuit power supplies.	–	–	5

* If communication disconnects normally, the NOP command is sent. If communication does not disconnect normally, the DISCONNECT command is sent for two or more communications cycles prior to connection, then the CONNECT command is sent.

4.7.2 Operation Sequence for Managing Parameters Using SERVOPACK

When the parameters are managed by SERVOPACK non-volatile memory, the operation is performed in two steps.

■ Step 1: Saving Parameters (during Set-up)

Procedure	Item	Command	Description	Phase
1	Turn ON control and main circuit power supplies.	NOP/DISCONNECT*1	–	1
3	Establish connection.	CONNECT	Establish communications. Start the WDT count.	2 or 3
4	Check information such as device ID.	ID_RD	Read information such as device type.	2 or 3
5	Set device.	PPRM_WR*2	Set the necessary parameters to non-volatile memory.	2 or 3
6	Disconnect connection.	DISCONNECT	Disconnect communications.	4 to 1
7	Turn OFF control and main circuit power supplies.	–	–	

* 1. If communication disconnects normally, the NOP command is sent. If communication does not disconnect normally, the DISCONNECT command is sent for two or more communications cycles prior to connection, then the CONNECT command is sent.
* 2. Do not use PRM_WR.

■ Step 2: Ordinary Operation Sequence

Procedure	Item	Command	Description	Phase
1	Turn ON control and main circuit power supplies.	NOP/DISONNECT*	–	1
2	Establish connection.	CONNECT	Establish communications. Start the WDT count.	2 or 3
3	Check information such as device ID.	ID_RD	Read information such as device type.	2 or 3
4	Turn ON encoder.	SENS_ON	Turn ON encoder and obtain the position data.	2 or 3
5	Turn ON servomotor.	SV_ON	Turn ON servomotor.	2 or 3
6	Start operation.	–	–	2 or 3
7	Turn OFF servomotor.	SV_OFF	Turn OFF servomotor.	2 or 3
8	Disconnect connection.	DISCONNECT	Disconnect communications.	4 to 1
9	Turn OFF control and main circuit power supplies.	–	–	

* If communication disconnects normally, the NOP command is sent. If communication does not disconnect normally, the DISCONNECT command is sent for two or more communications cycles prior to connection, then the CONNECT command is sent.

4.7.3 Operation Sequence to Turn the Servo ON

The host controller controls the servomotor using motion commands while the servo is ON (while current flows to the servomotor). While the servo is OFF (while current to the servomotor is interrupted), the SERVOPACK manages position data so that the reference coordinate system (POS, MPOS) and FB coordinate system (APOS) will be equal. Therefore, it is necessary to send a SMON command to read the servo reference coordinates (POS) to send a motion command with an appropriate reference position.
Confirm that PON = 1 (Main power supply ON) and ALM = 0 (No alarm) in STATUS field and E-STP = 0 (Emergency stop signal input OFF) of I/O monitor, and then send a SV_ON command to turn the servo ON.

4.7.4 Operation Sequence When OT (Overtravel Limit Switch) Signal is Input

When an OT signal is input, the SERVOPACK prohibits the servomotor to rotate in the OT signal direction. While rotation in the OT signal direction is being prohibited, the SERVOPACK continues controlling the servomotor. Carry out the following operations when an OT signal is input or to reset the OT signal.

■ Operation When an OT Signal is Input

1. Monitor the OT signal and send a stop command if the OT signal is input. Use either of the following stop commands.
   Interpolation command (INTERPOLATE or LATCH)
   - The interpolation command keeps the interpolation position, then stops. As an alternative, send a HOLD or SMON command.

   Move command (POSING, etc.) other than interpolation commands
   - Send a HOLD command.
2. Use the output complete flag (DEN = 1) to confirm the completion of SERVOPACK OT processing. By also confirming that PSET = 1, it is possible to detect motor stopping with absolute certainty. The command used in number 1 above is held until these flags are complete.

■ Operation to Reset the OT Signal (Retraction)

Use a move command to reset the OT signal (retraction). Read out the current position (POS) to reset the reference coordinate system of the host controller, and then send a move command.

4.7.5 Operation Sequence When E-STP Signal is Input

If an E-STP signal is input while the servo is ON, the SERVOPACK will detect the emergency stop alarm (A.280) and forcibly turn OFF the servo. Carry out the following operations when an E-STP signal is input or to reset the alarm.

■ Operations When an Emergency Stop Signal is Input

Monitor the alarm status or SVON = 0 in STATUS field in the same way as at occurrence of alarm. If an error is detected, send a command such as SV_OFF and HOLD. During emergency stop, monitor the SERVOPACK status using SMON command, etc.

■ Operation to Reset the Emergency Stop

Send an ALM_CLR command to reset the alarm status. After the whole system including the host controller is restored, reset the E-STP signal. Then, turn the servo ON according to the descriptions in *4.7.3 Operation Sequence to Turn the Servo ON*.

■ Operation Sequence

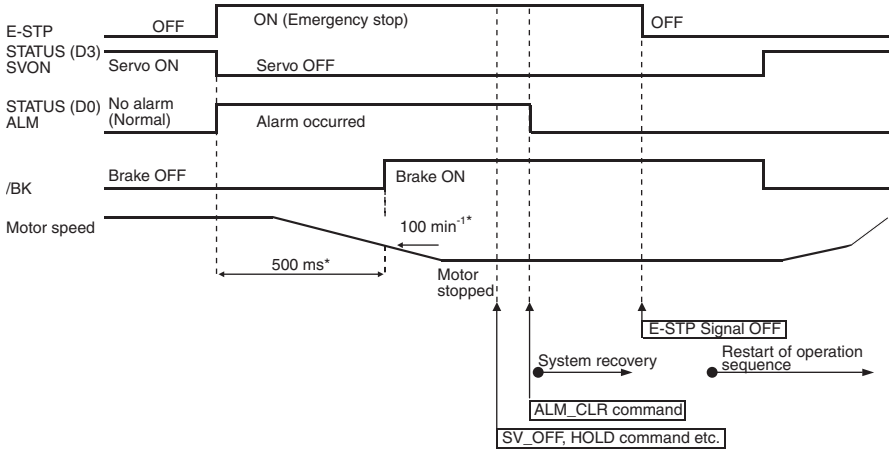

* /BK signal is output when the motor speed reaches 100 min^{-1} or when 500 ms elapses after the servo turns OFF.

5 Trial Operation

⚠ CAUTION

- Conduct trial operation on the servomotor alone with the motor shaft disconnected from machine to avoid any unexpected accidents.

  Failure to observe this caution may result in injury.
- During the JOG operation and the home position search operation using CX-Drive, the forward run prohibited (P-OT), reverse run prohibited (N-OT), and emergency stop (E-STP) signals will be ignored. Alternative measures must be taken in case of overtravel and emergency stop.

This chapter explains how to check the connections of the power supply, servomotor main circuit, and encoder cables. Servomotor malfunction is often caused by incorrect wiring.
After having confirmed that the cables are correctly connected, use CX-Drive* to perform a trial operation of the servomotor without connecting to a load, using the following procedure.

* Software used to perform trial operation, change parameters, and monitor the SERVOPACK operation and status.

Procedure	Descriptions
1. Install the SERVOPACK and servomotor. 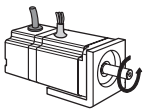	• Install the servomotor and SERVOPACK according to the installation instructions in the relevant manual (see *2.2 Installation Method*). Fix the servomotor flange on the machine. If the servomotor is not fixed, it may flip over at operation start or stop. Install the SERVOPACK in the control panel.
2. Wire the cables. 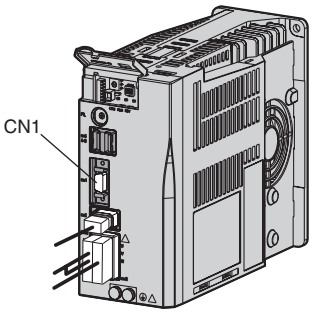	• Wire the power supply, servomotor main circuit, and encoder cables according to the instructions in *3 Wiring*. • Disconnect the I/O signal connector (CN1). • When using a servomotor with a brake, wire the brake power supply cable and signal lines such as the relay.

(cont'd)

Procedure	Descriptions
3. Set and confirm the SERVOPACK station address. 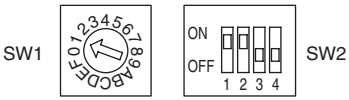 (Factory setting: 41)	• Use SW1 and bit 3 of SW2 to set the station address (axis address). Refer to *3.8.3 Setting Communications Specifications*. When using the factory setting, check the setting as well.
4. Turn ON the SERVOPACK power supply.	• Turn ON the SERVOPACK power supply.
5. Start CX-Drive. 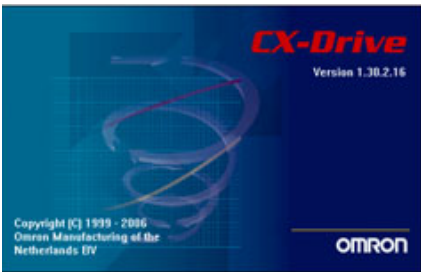 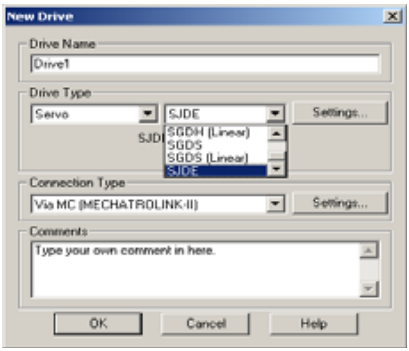 	• Start CX-Drive. • Select File New and select Drive Type = "Servo" and "SGDE. • Then select Drive Type Settings

(cont'd)

Procedure	Descriptions
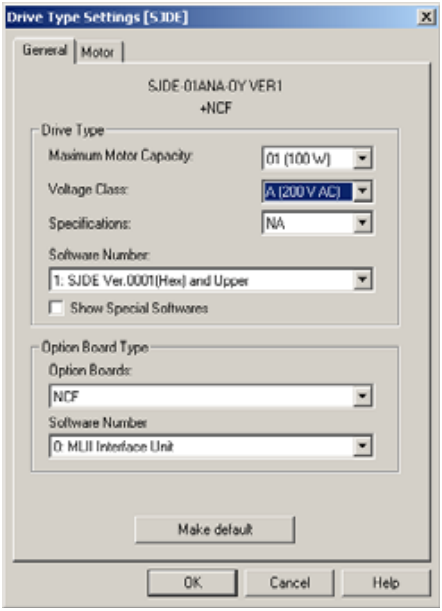	• In the Drive Type Settings menu enter your Junma Servo Drive details and confirm with OK. • Now select the suitable connection type and click on Connection Type settings to specify the details.

(cont'd)

Procedure	Descriptions
6. Perform the trial operation.	Check the following during trial operation. • Are cables correctly connected? • Servomotor rotation direction • Servomotor speed • Motor axis home position (Used when alignment with the machine is required.)
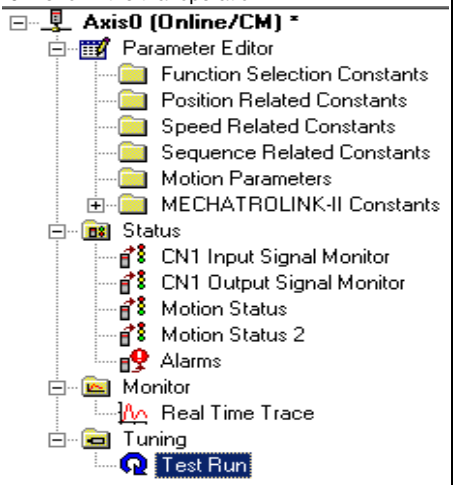	• Click on nnect button to go online with the Junma. • Select "Test Run" from the tuning category in the Tree view pane
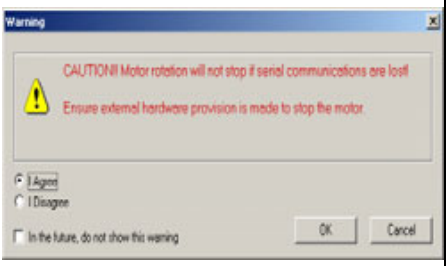	• A warning message will be displayed by default
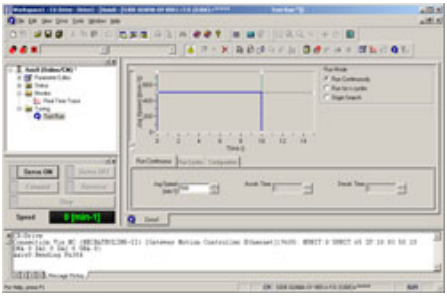	• The Test Run View will appear • This view allows you to set Servo Mode On and choose between 3 possible run operations:

(cont'd)

Procedure	Descriptions
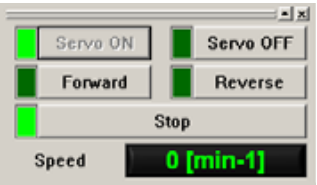	• 1. Run continuously (basic jog operation). To set the jog speed you need to enter the value in the Jog Speed edit box inside the "Run Continuous" Tab. After setting the desired value, click on "Servo On" button in the motor operation toolbar
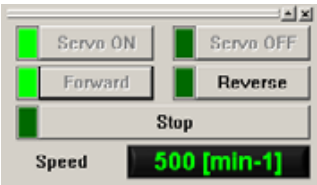	Then you can click on "Forward" or "Reverse" to start the JOG operation. The jog speed is monitored in the motor operation tool bar. You can click on the Stop button to stop the jog operation. If you want to swith to a different switch Run operation use the following method: Click the Servo Off button to disable the servo.
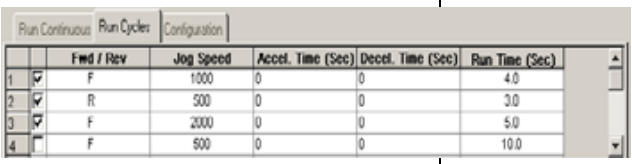	2. Run for n cycles (where you can set up to 10 different steps for a complex run operation). When you select "Run for n cycles the second tab "Run Cycles" is selected. You will find a grid where you can set the desired Jog steps: for each step you can define the acceleration, deceleration and run time and the jog speed. Click on "Run Forward" or Run Reverse" to start the operation.
	Finally you can use the Test Run View for the Search Origin operation. Once you have the search Origin operation selected, set the Servo in On state by clicking "Servo On". Then click on "Forward" or "Reverse" button to start the Search Origin operation. A text message with the result of the operation will be displayed in the output window.

6 Functions

6.1 Filter Setting

The factory setting for a filter can be normally used without changing. Change the setting if there are problems such as overshoot.
There are two ways to set a filter.
Use the SW2 bit 4 to select the setting method.

SW2 Bit4	Description
OFF	Uses the FIL rotary switch to set a filter (factory setting). (The setting of Pn00A is invalid.)
ON	Uses Pn00A. (The setting of the FIL rotary switch is invalid.)

When setting the filter using the FIL rotary switch.

FIL

Filter Setting Value*2	Acceleration/ Deceleration Time for Step Reference*4	Approx. Time between Completing Reference and Completing Positioning (Settling Time)*3	Description
0*1	45 ms	100 to 200 ms	↑ Small filter time constant (short positioning time)
1	50 ms	110 to 220 ms	
2	60 ms	130 to 260 ms	
3	65 ms	150 to 300 ms	
4	70 ms	170 to 340 ms	
5	80 ms	200 to 400 ms	
6	85 ms	250 to 500 ms	
7	170 ms	500 to 1000 ms	↓ Large filter time constant (little vibration with a long positioning time)
8 to F	Do not set 8 to F.		

* 1. The factory setting is 0. If the machine vibrates, this value must be changed.
* 2. If the machine vibrates when starting or stopping the machine, set a larger value.
* 3. The value depends on conditions such as the level of reference acceleration and deceleration, the machine rigidity and the motor resolution.
* 4. Select the correct servomotor capacity with these values if using a step reference that has no acceleration or deceleration time.

When setting reference filter using Pn00A.

Write a value in parameter Pn00A (Filter Setting) by using the PRM_WR or PPRM_WR command.

6.2 Switching Servomotor Rotation Direction

The SERVOPACK has a Reverse Rotation Mode that reverses the direction of servomotor rotation without rewiring. Forward Rotation in the standard setting is defined as counterclockwise as viewed from the load.

With the Reverse Rotation Mode, only the direction of servomotor rotation can be reversed. In this case, the physical direction of shaft motion is reversed. The polarity of the monitor data from the SERVOPACK such as feedback position or feedback speed is not changed.

	Standard Setting	Reverse Rotation Mode
Forward Reference	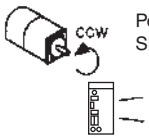 Position data from SERVOPACK + direction	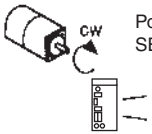 Position data from SERVOPACK + direction
Reverse Reference	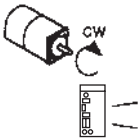 Position data from SERVOPACK - direction	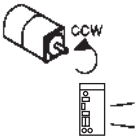 Position data from SERVOPACK - direction

- Reverse Rotation Mode Setting Method

Use the parameter Pn000.0.

Use the following settings to select the direction of servomotor rotation.

Parameter		Description
Pn000	n.□□□0	Forward rotation is defined as counterclockwise (CCW) rotation as viewed from the load. (Factory setting)
	n.□□□1	Forward rotation is defined as clockwise (CW) rotation as viewed from the load. (Reverse Rotation Mode)

6.3 Electronic Gear

The electronic gear function enables the servomotor travel distance per input reference pulse from host controller to be set to any value. One reference pulse from the host controller is the minimum unit and is called as one reference unit.
The electronic gear function allows the host controller generating pulses to be used for control without having to consider the machine deceleration ratio or the number of encoder pulses.

When the Electronic Gear is Not Used

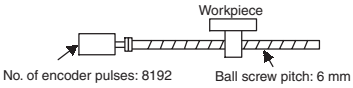

To move a workpiece 10 mm:

1 revolution is 6 mm. Therefore,
10 / 6 = 1.6666 revolutions
8192 pulses is 1 revolution. Therefore,
1.6666 × 8192 = 13653 pulses
13653 pulses are input as references.
The equation must be calculated at the host controller.

When the Electronic Gear is Used

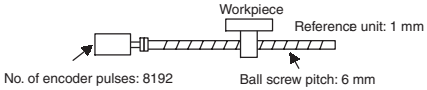

To move a workpiece 10 mm using reference units:

The reference unit is 1mm. Therefore,
to move the workpiece 10 mm (10000 mm),
1 pulse = 1 mm, so
10000/1 = 10000 pulses.
Input 10000 pulses.

6.3.1 Setting the Electronic Gear

Calculate the electronic gear ratio (B/A) using the following procedure, and set the values in parameters Pn20E and Pn210.

1. Check the machine specifications.

   Items related to the electronic gear:
   - Deceleration ratio
   - Ball screw pitch
   - Pulley diameter, etc.

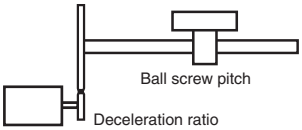

2. Check the number of encoder pulses for the servomotor.

Servomotor Model	Number of Encoder Pulses (pulses/rev.)
SJME	8192

3. Determine the reference unit to be used.

   The reference unit is the minimum unit of the position data to move the load. (The minimum unit for references from host controller.)

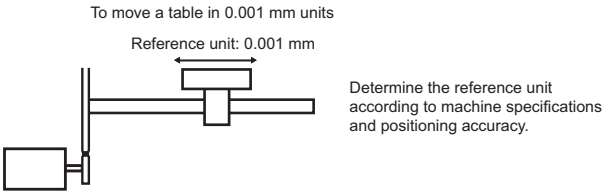

- Use the following units of measurement in physics.
  Examples: 0.01 mm, 0.001 mm, 0.1°, 0.01 inch

4. Determine the load travel distance per load shaft revolution in reference units.

$$\text{Travel distance per load shaft revolution (reference unit)} = \frac{\text{Travel distance by load shaft one revolution}}{\text{Reference unit}}$$

- When the ball screw pitch is 5 mm and the reference unit is 0.001 mm

$$\frac{5}{0.001} = 5000 \text{ (reference unit)}$$

Ball Screw	Circular Table	Belt and Pulley
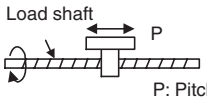 1 revolution = $\frac{P}{\text{Reference unit}}$	1 revolution = $\frac{360°}{\text{Reference unit}}$	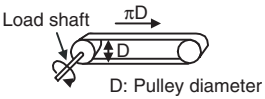 1 revolution = $\frac{\pi D}{\text{Reference unit}}$

5. Electronic gear ratio is given as ($\frac{B}{A}$).

   If the deceleration ratio of the servomotor and load shaft is given as ($\frac{m}{n}$),

   (where the load shaft rotates n times when the servomotor shaft rotates m times)

$$\text{Electronic gear ratio } \left(\frac{B}{A}\right) = \frac{8192}{\text{Travel distance per load shaft revolution (reference unit)}} \times \frac{m}{n}$$

IMPORTANT

Make sure that the electronic gear ratio satisfies the following equation.

$0.01 \leq \text{Electronic gear ratio } \left(\frac{B}{A}\right) \leq 100$

The SERVOPACK will not operate properly if the electronic gear ratio is outside of this range. Modify the load configuration or reference unit.

6. Set the parameters.

Reduce the electronic gear ratio ($\frac{B}{A}$) to the lower terms so that both A and B are integers smaller than 1073741824, then set A and B in the respective parameters.

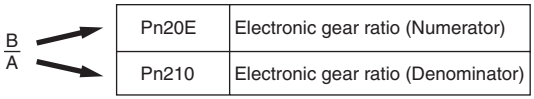

That is all that is required to set the electronic gear ratio.

Parameter No.	Name	Data Size (byte)	Min. Set Value	Max. Set Value	Units	Factory Setting
Pn20E	Electronic Gear Ratio (Numerator)	4	1	1073741824	–	1
Pn210	Electronic Gear Ratio (Denominator)	4	1	1073741824	–	1

Set the electronic gear ratio according to the machine specifications as described below.

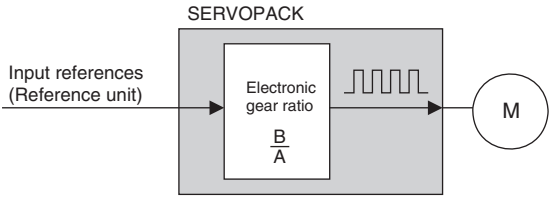

$$\text{Electronic gear ratio}\left(\frac{B}{A}\right) = \frac{Pn20E}{Pn210}$$

- B = 8192 × [Servomotor shaft rotation speed]
- A = [Reference units (Load travel distance per load shaft one revolution] × [Load shaft rotation speed]

6.4 Position Management

■ Range of Position Data

The position data length used by MECHATROLINK-II is 4 bytes. During infinite-length operation where the position data length exceeds 4 bytes, the data becomes as shown below.

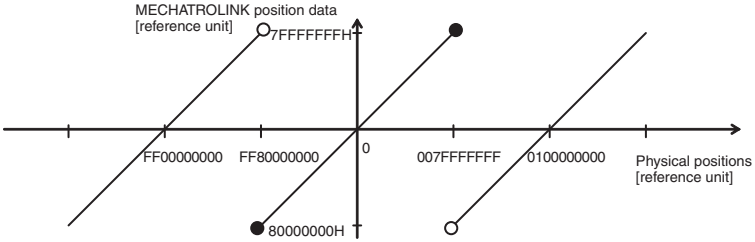

The position data is 0 when the power supply is turned ON.

6.5 Motion Commands

Motion operations in position control are classified into two types: INTERPOLATE and POSING

6.5.1 INTERPOLATE Related Commands

INTERPOLATE commands are as follows:
INTERPOLATE, LATCH

Position reference is output every communication cycle.

6.5.2 POSING Related Commands

POSING related commands are as follows:
POSING, FEED, EX_POSING, ZRET, HOLD

POSING related commands execute positioning to the target position (TPOS) at the target speed (TSPD) with acceleration/deceleration set in parameters.
Use the parameters listed below to set asymmetric acceleration/deceleration.
The set value will be valid when DEN = 1.

Parameter No.	Name	Data Size	Min. Set Value	Max. Set Value	Units	Factory Setting
Pn80B	Linear acceleration constant	2 bytes	1	65535	10000 reference units/s^2	100
Pn80E	Linear deceleration constant	2 bytes	1	65535	10000 reference units/s^2	100

Max. reference distance: 2147483647 (7FFFFFFFH) [reference units]
Max. acceleration: 655350000 [reference units/s^2]

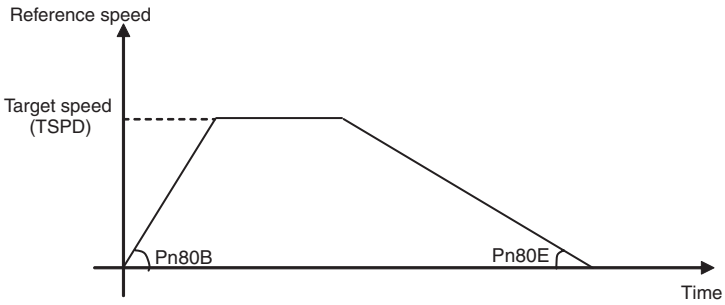

6.6 Software Limit Function

The software limit function forcibly stops the servomotor (zero-speed stop*) in the same way as an overtravel signal when the machine movable section enters the software limit zone.

* Stops the servomotor by setting reference to zero (0).

6.6.1 Conditions Needed to Enable the Software Limit Function

The software limits are detected under the following conditions. Under all other circumstances, they will not be detected and the software limit monitor in STATUS field will be fixed to 0.

1. The homing (ZRET) operation has been completed.
2. Coordinate setting has been completed after setting the reference point (REFE=1) by using POS_SET (coordinate setting).

6.6.2 Parameters Related Software Limit Function

The set value will be immediately written to the SERVOPACK.

Parameter No.	Name	Data Size	Min. Set Value	Max. Set Value	Units	Factory Setting
Pn801	Function Selection Application 6 (Software LS)	2	0000H	0113H	–	0003H
Pn804	Forward Software Limit	4	-1073741823	1073741823	1 Reference unit	1073741823
Pn806	Reverse Software Limit	4	-1073741823	1073741823	1 Reference unit	-1073741823

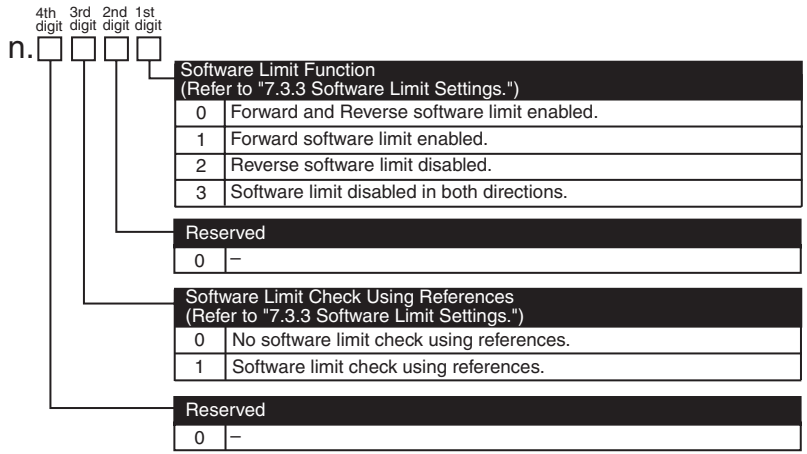

■ Software Limit Function (Pn801.0)

Enable or disable the software limits.
The software limit function will not be performed in the direction for which the software limit function is disabled and the software limit monitor in the STATUS field will be fixed to 0.

Setting of 1st digit of Pn801	Description
0	Software limits enabled in forward and reverse directions.
1	Forward software limit disabled.
2	Reverse software limit disabled.
3	Forward and reverse software limits disabled.

■ Software Limit Check using Reference (Pn801.2)

If the target position set with POSING and INTERPOLATE commands is within the software limit zone, positioning will be performed with the target position as the software limit.

Setting of 3rd digit of Pn801	Description
0	No software limit check using references
1	Software limit check using references

6.6.3 Monitoring Software Limit

Confirm the software limit status in P_SOT and N_SOT in the STATUS field.

6.7 Latching Area

The latching area can be specified by setting the parameters listed below.
The setting will be immediately written to the SERVOPACK.

Parameter No.	Name	Data Size	Min. Set Value	Max. Set Value	Units	Factory Setting
Pn820	Latching area upper limit	4 bytes	-2147483648	2147483647	Reference unit	0
Pn822	Latching area lower limit	4 bytes	-2147483648	2147483647	Reference unit	0

1. When Pn820 > Pn822

   The latching area is between the latching area lower limit and latching area upper limit including the set value.

2. When Pn820 ≤Pn822

   The latching area is the latching area lower limit or above, or the latching area upper limit or below.

7 Parameters

7.1 Parameter Editor

The parameters can be displayed and edited using the CX-Drive parameter editor function.
Connect a computer with CX-Drive installed to the SERVOPACK and start CX-Drive. Select the Parameter Editor from the Tree project editor in the left pane. The parameters are organized in categories that can be accessed from the Tree editor in the left pane (project tree).
To edit a certain parameter, select the desired parameter in the grid, and enter the new parameter value. Once you have entered the new value click the “ENTER” key, or the “DOWN” arrow key, or simply select another parameter and the last edited parameter will be downloaded automatically to the Servopack.

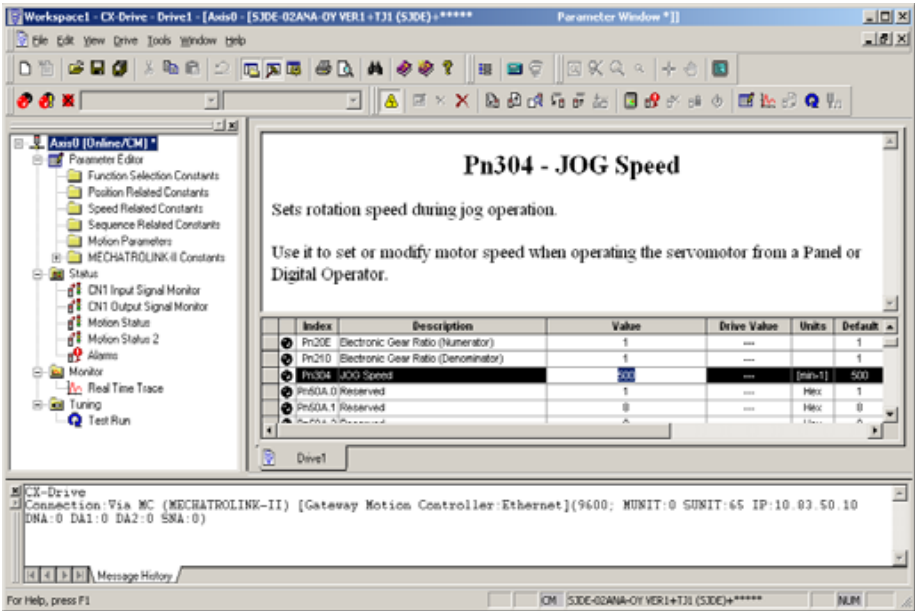

-You can upload all the parameters into the CX-Drive by using the upload command button.

You can download all the parameters from the CX-Drive to the Servopack by using the download command button.

7.2 List of Parameters

<Conditions to Validate Settings>
A: Immediately validated after setting or changing
B: Validated when DEN = 1
(Do not change when DEN = 0. If any change is made when DEN = 0, safe operation cannot be secured.)
C: Validated when the power supply is turned OFF and then ON again, or by sending CONFIG command.

Parameter No.	Name	Data Size	Min. Set Value	Max. Set Value	Units	Factory Setting	Validation	Reference Page
Pn000	Function Selection Basic Switch 0	2	—	—	—	0010	C	119
Pn00A	Filter Setting*	2	0000H	000FH	—	0000H	A	118
Pn20E	Electronic Gear Ratio (Numerator)	4	1	1073741824	—	1	C	122
Pn210	Electronic Gear Ratio (Denominator)	4	1	1073741824	—	1	C	122
Pn304	JOG Speed	2	0	10000	min^{-1}	500	A	—

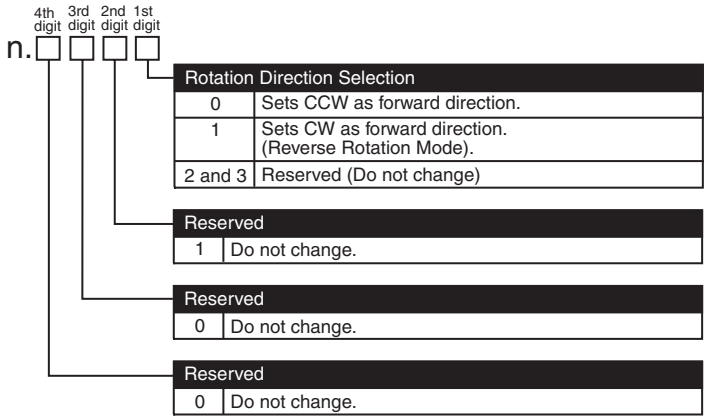

* The setting method is the same as for FIL rotary switch. Refer to *6.1 Filter Setting*.

(cont'd)

Parameter No.	Name	Data Size	Min. Set Value	Max. Set Value	Units	Factory Setting	Validation	Reference Page
Pn50A	Input Signal Selection 1	2	2881H	8881H	—	2881H	C	—

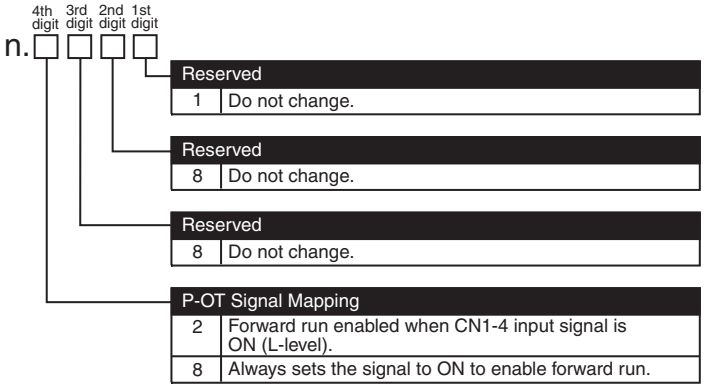

Pn50B	Input Signal Selection 2	2	8883H	8888H	—	8883H	C	—

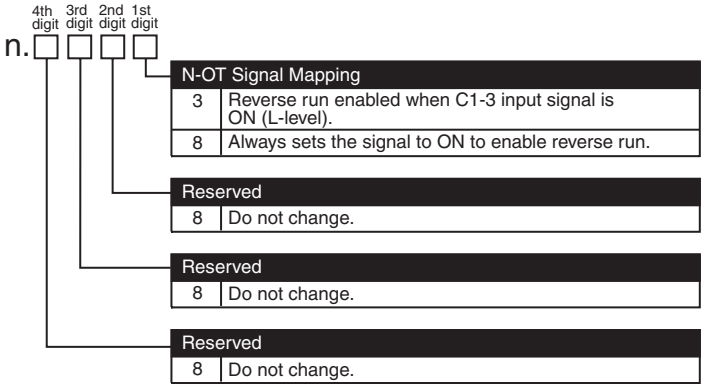

(cont'd)

Parameter No.	Name	Data Size	Min. Set Value	Max. Set Value	Units	Factory Setting	Validation	Reference Page
Pn515	Input Signal Selection 5	2	8488H	8888H	—	8488H	C	—
Pn522	Positioning Completion Width	4	0	1073741824	1 reference unit	10	A	98
Pn524	NEAR Signal Width	4	1	1073741824	1 reference unit	100	A	100
Pn800	Communication Control	2	0000H	0F73H	—	0040H	A	—

Reserved

8	Do not change.

Reserved

8	Do not change.

E-STP Signal Mapping

4	Emergency stop when C1-6 input signal is OFF (H-level).
8	Always sets the signal to ON to disable emergency stop.

Reserved

8	Do not change.

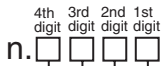

Reserved

0	Do not change.

Warning Check Mask

0	Normal status
1	Ignores data setting warning (A.94□).
2	Ignores command warning (A.95□).
3	Ignores both A.94□ and A.95□.
4	Ignores communications warning (A.960).
5	Ignores both A.94□ and A.960.
6	Ignores both A.95□ and A.960.
7	Ignores A.94□, A.95□, and A.960.

Reserved

0	Do not change.

Reserved

0	Do not change.

(cont'd)

Parameter No.	Name	Data Size	Min. Set Value	Max. Set Value	Units	Factory Setting	Validation	Reference Page
Pn801	Function Selection Application 6 (Software LS)	2	0000H	0103H	—	0003H	A	125

n.□□□□

4th digit, 3rd digit, 2nd digit, 1st digit

Software Limit Function

0	Forward and reverse software limits enabled.
1	Forward software limit disabled.
2	Reverse software limit disabled.
3	Software limits disabled in both directions.

Reserved

0	Do not change.

Software Limit Check Using References

0	No software limit check using references
1	Software limit check using references

Reserved

0	Do not change.

Pn803	Origin Range	2	0	250	1 reference unit	10	A	97
Pn804	Forward Software Limit	4	-1073741823	1073741823	1 reference unit	1073741823	A	125
Pn806	Reverse Software Limit	4	-1073741823	1073741823	1 reference unit	-1073741823	A	125
Pn80B	Linear Acceleration Constant	2	1	65535	10000 reference units/s^2	100	B	124
Pn80E	Linear Deceleration Parameter	2	1	65535	10000 reference units/s^2	100	B	124
Pn814	Final Travel Distance for External Input Positioning	4	-1073741823	1073741823	1 reference unit	100	B	85

(cont'd)

Parameter No.	Name	Data Size	Min. Set Value	Max. Set Value	Units	Factory Setting	Validation	Reference Page
Pn816	Homing Mode Setting	2	0000H	0001H	—	0000H	B	87
	n.□□□□ 4th digit, 3rd digit, 2nd digit, 1st digit **Homing Direction** 0 Forward 1 Reverse **Reserved** 0 Do not change. **Reserved** 0 Do not change. **Reserved** 0 Do not change.							
Pn817	Homing Approach Speed 1	2	0	65535	100 reference units/s	50	B	87
Pn818	Homing Approach Speed 2	2	0	65535	100 reference units/s	5	B	87
Pn819	Final Travel Distance for Homing	4	-1073741823	1073741823	1 reference unit	100	B	87
Pn820	Latching Area Upper Limit	4	-2147483648	2147483647	1 reference unit	0	A	87
Pn822	Latching Area Lower Limit	4	-2147483648	2147483647	1 reference unit	0	A	87

8 Troubleshooting

If the servomotor does not run or stop properly during operation in combination with the JUNMA series SERVOPACK, refer to the troubleshooting guide in this chapter and take corrective action. Contact your Omron Yaskawa representative if the problem cannot be solved by this method.

IMPORTANT

Before taking corrective action for the cause of alarm, turn OFF the power supply to reset the alarm and then turn it ON again.

The occurrence of an alarm or warning is indicated by the status indicator LEDs on the SERVOPACK's front panel.
Check the alarm or warning as displays described in the following table and take the corrective action.

Status Indicator LEDs	SERVOPACK Status	How to Check Alarm/Warning Displays
COM ALM	Alarm	Check the alarm display on the host controller connected to the SERVOPACK through MECHATROLINK-II communcia-tions.
COM ALM	Alarm	Connect to the host controller and check the alarms using CX-Drive.
COM ALM	Warning	Check the warning display on the host controller connected to the SERVOPACK through MECHATROLINK-II communci-ations.

: Lit

: Unlit

: Blinking

■ Alarms

The currently occurring alarm can be monitored usingCX-Drive.
Connect a personal computer with CX-Drive installed to the SERVOPACK, and select ***Alarm Display*** from the project tree pane.

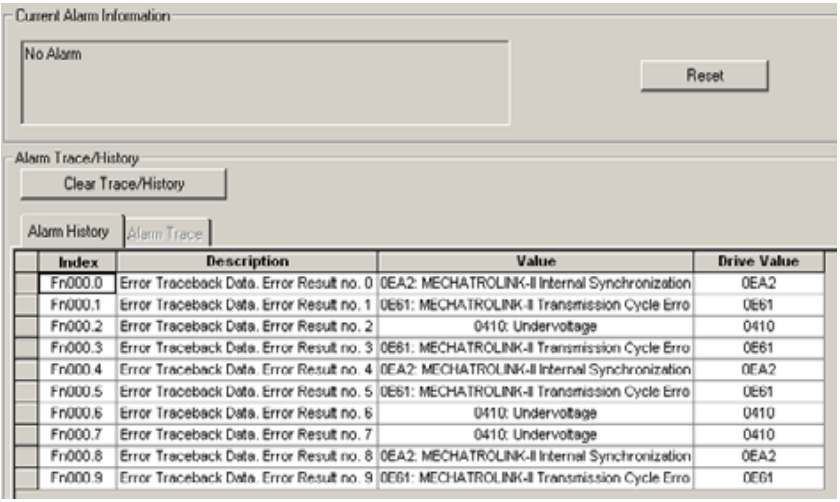

Index	Description	Value	Drive Value
Fn000.0	Error Traceback Data. Error Result no. 0	0EA2: MECHATROLINK-II Internal Synchronization	0EA2
Fn000.1	Error Traceback Data. Error Result no. 1	0E61: MECHATROLINK-II Transmission Cycle Erro	0E61
Fn000.2	Error Traceback Data. Error Result no. 2	0410: Undervoltage	0410
Fn000.3	Error Traceback Data. Error Result no. 3	0E61: MECHATROLINK-II Transmission Cycle Erro	0E61
Fn000.4	Error Traceback Data. Error Result no. 4	0EA2: MECHATROLINK-II Internal Synchronization	0EA2
Fn000.5	Error Traceback Data. Error Result no. 5	0E61: MECHATROLINK-II Transmission Cycle Erro	0E61
Fn000.6	Error Traceback Data. Error Result no. 6	0410: Undervoltage	0410
Fn000.7	Error Traceback Data. Error Result no. 7	0410: Undervoltage	0410
Fn000.8	Error Traceback Data. Error Result no. 8	0EA2: MECHATROLINK-II Internal Synchronization	0EA2
Fn000.9	Error Traceback Data. Error Result no. 9	0E61: MECHATROLINK-II Transmission Cycle Erro	0E61

8.1 Alarm Displays

Alarm displays, names, and meanings are listed below.
If an alarm occurs, the servomotor can be stopped by doing either of the following operations.
- Stop by dynamic brake: Stops the servomotor immediately using the dynamic brake.
- Zero-speed stop: Stops the servomotor by setting the speed reference to “0.”

Alarm Display	Alarm Name	Meaning	Servomotor Stop Method	Alarm Reset
A.020	Parameter Error 0	The data of the parameter in the SERVOPACK is incorrect.	DB stop	N/A
A.021	Parameter Error 1	The data of the parameter in the SERVOPACK is incorrect.	DB stop	N/A
A.022	Parameter Error 2	The data of the parameter in the SERVOPACK is incorrect.	DB stop	N/A
A.023	Parameter Error 3	The data of the parameter in the SERVOPACK is incorrect.	DB stop	N/A
A.030	Main Circuit Detector Error	Detection data for the main circuit is incorrect.	DB stop	Available
A.040	Parameter Setting Error	The parameter setting is outside the allowable setting range.	DB stop	N/A
A.051	Unsupported Product Alarm	SERVOPACK is faulty.	DB stop	N/A
A.0b0	Servo ON Reference Invalid Alarm	After the servo ON signal was sent through the CX-Drive, the SV_ON command of the MECHATROLINK-II was sent.	DB stop	Available
A.100	Overcurrent	An overcurrent flowed through the IGBT or the SERVOPACK heat sink was overheated.	DB stop	N/A
A.280	Emergency Stop	An emergency stop signal was input while the servomotor were running.	DB stop	Available
A.400	Overvoltage	The main circuit DC voltage is excessively high.	DB stop	Available
A.410	Undervoltage	The power supply was turned ON again before the SERVOPACK power supply was cut off.	Zero-speed stop	Available
A.510	Overspeed	The servomotor speed is excessively high.	DB stop	Available
A.710	Overload: High load	The servomotor was operating for several seconds to several tens of seconds under a torque largely exceeding the rating.	Zero-speed stop	Available
A.720	Overload: Low load	The servomotor was operating continuously under a torque exceeding the rating.	DB stop	Available
A.730	Dynamic Brake Overload	The servomotor did not stop three seconds or more after the servo was turned OFF.	Zero-speed stop	Available
A.7AA	Board Overheated	The temperature inside the SERVOPACK increased excessively.	Zero-speed stop	Available
A.7Ab	SERVOPACK Built-in Fan Stop	The SERVOPACK built-in fan stopped.	Zero-speed stop	N/A

(cont'd)

Alarm Display	Alarm Name	Meaning	Servomotor Stop Method	Alarm Reset
A.b33	Current Detection Error	Servomotor current detector is faulty, or servomotor power line is disconnected.	DB stop	N/A
A.b6A	MECHATROLINK-II Communication LSI Error	The MECHATROLINK-II communications LSI is faulty.	DB stop	N/A
A.bF0	System Alarm 0	The SERVOPACK is faulty.	DB stop	N/A
A.bF1	System Alarm 1	The SERVOPACK is faulty.	DB stop	N/A
A.bF2	System Alarm 2	The SERVOPACK is faulty.	DB stop	N/A
A.bF3	System Alarm 3	The SERVOPACK is faulty.	DB stop	N/A
A.bF4	System Alarm 4	The SERVOPACK is faulty.	DB stop	N/A
A.bFA	System Alarm A	The SERVOPACK is faulty.	DB stop	N/A
A.C10	Servo Overrun Detected	The servomotor ran out of control.	DB stop	Available
A.C20	Incorrect Phase Detection	The servomotor phase signal was incorrectly detected.	DB stop	N/A
A.C50	Incorrect Polarity Detection	The servomotor polarity signal was incorrectly detected.	DB stop	N/A
A.C90	Encoder Signal Error	The amplitude of encoder output signal is faulty.	DB stop	N/A
A.d00	Position Error Pulse Overflow	The position error exceeded the parameter.	DB stop	Available
A.E02	MECHATROLINK-II Internal Synchronization Error 1	Synchronization error during MECHATROLINK-II communications with the SERVOPACK.	Zero-speed stop	N/A
A.EA2	MECHATROLINK-II Internal Synchronization Error 2	Synchronization error during MECHATROLINK-II communications with the SERVOPACK.	Zero-speed stop	Available
A.ED0	MECHATROLINK-II Internal Command Error 0	Command error inside the SERVOPACK.	Zero-speed stop	Available
A.ED1	MECHATROLINK-II Internal Command Error 1	Command error inside the SERVOPACK.	Zero-speed stop	Available
A.E40	MECHATROLINK-II Transmission Cycle Setting Error	The transmission cycle setting for MECHATROLINK-II communications is incorrect.	Zero-speed stop	Available
A.E50	MECHATROLINK-II Synchronization Error	Synchronization error during MECHATROLINK-II communications.	Zero-speed stop	Available
A.E51	MECHATROLINK-II Synchronization Failed	Failed to establish synchronization during MECHATROLINK-II communications.	Zero-speed stop	Available
A.E60	MECHATROLINK-II Communications Error	A communication error occurred during MECHATROLINK-II communications.	Zero-speed stop	Available
A.E61	MECHATROLINK-II Transmission Cycle Error	The transmission cycle has changed during MECHATROLINK-II communications.	Zero-speed stop	Available

8.2 Warning Displays

Warning displays, with their names and meanings, are listed below.

Warning Display	Warning Name	Meaning
A.910	Overload	This warning occurs before the overload alarm (A.710 or A.720) occurs. If the warning is ignored and operation continues, an overload alarm may occur.
A.94A	MECHATROLINK-II Data Setting Warning 1	An incorrect parameter number was set in the command.
A.94b	MECHATROLINK-II Data Setting Warning 2	The command data is out of range.
A.94d	MECHATROLINK-II Data Setting Warning 4	Unmatched data size was detected.
A.95A	MECHATROLINK-II Command Warning 1	A command was sent though the command sending conditions were not satisfied.
A.95b	MECHATROLINK-II Command Warning 2	An unsupported command was sent.
A.95d	MECHATROLINK-II Command Warning 4	A command, especially latch command, interferes.
A.95E	MECHATROLINK-II Command Warning 5	A sub command and main command interfere.
A.960	MECHATROLINK-II Communications Warning	A communications error occurred during MECHATROLINK communications.

8.3 Alarm/Warning Display and Troubleshooting

The corrective actions when an alarm or warning occurs are described below.
Contact your Omron Yaskawa representative if the problem cannot be solved by the described corrective actions.

8.3.1 Alarm Display and Troubleshooting

Alarm Display	Alarm Name	Situation at Alarm Occurrence	Cause	Corrective Actions
A.020	Parameter Error 0	Occurred when the power supply was turned ON.	The power supply was turned OFF while changing the parameter.	Execute the initialize parameter function of CX-Drive, and then set the parameter again.
			The number of times that the parameters were written exceeded the upper limit. For example, the parameter was changed every scan through the host controller by using PPRM_WR command.	• Replace the SERVOPACK. • Contact your Omron Yaskawa representative. It is also necessary to correct the parameter writing method.
			The SERVOPACK is faulty.	• Replace the SERVOPACK. • Contact your Omron Yaskawa representative.
A.021	Parameter Error 1	Occurred when the power supply was turned ON.	The SERVOPACK is faulty.	• Replace the SERVOPACK. • Contact your Omron Yaskawa representative.
A.022	Parameter Error 2	Occurred when the power supply was turned ON.	The SERVOPACK is faulty.	• Replace the SERVOPACK. • Contact your Omron Yaskawa representative.
A.023	Parameter Error 3	Occurred when the power supply was turned ON.	The SERVOPACK is faulty.	• Replace the SERVOPACK. • Contact your Omron Yaskawa representative.
A.030	Main Circuit Detector Error	Occurred when the power supply was turned ON or while the servomotor was running.	The SERVOPACK is faulty.	• Replace the SERVOPACK. • Contact your Omron Yaskawa representative.
A.040	Parameter Setting Error	Occurred when the power supply was turned ON.	The parameter is set out of the allowable range.	Set a value within the setting range.
			The electronic gear ratio is set out of the allowable range.	The ratio must satisfy the equation $: 0.01 \leq \frac{Pn20E}{Pn210} \leq 100$
			The SERVOPACK is faulty.	• Replace the SERVOPACK. • Contact your Omron Yaskawa representative.
A.051	Unsupported Product Alarm	Occurred when the power supply was turned ON.	The SERVOPACK is faulty.	• Replace the SERVOPACK. • Contact your Omron Yaskawa representative.

(cont'd)

Alarm Display	Alarm Name	Situation at Alarm Occurrence	Cause	Corrective Actions
A.0b0	Servo ON Reference Invalid Alarm	After executing JOG or home position search function through CX-Drive, the MECHATROLINK-II command SV_ON was sent.	Sending the MECHATROLINK-II command SV_ON causes an alarm after executing JOG or home position search function through CX-Drive.	Turn the power supply OFF and then ON again or release the communications using DISCONNECT command and set up the communications again.
A.100	Overcurrent	Occurred when the power supply was turned ON or while the servomotor was running.	The connection between grounding and U, V, or W is incorrect.	Check and then correct the wiring.
			The grounding line has contact with other terminals.	
			A short circuit or ground fault • Between the grounding and U, V, or W of the servomotor main circuit cable	Repair or replace the servomotor main circuit cable. Note: Always confirm that there is no short circuit or ground fault before turning ON the power supply again.
			The wiring of the regenerative unit is incorrect.	Check and then correct the wiring.
			A short circuit between the grounding and U, V, or W of the SERVOPACK	• Replace the SERVOPACK. • Contact your Omron Yaskawa representative.
			A short circuit or ground fault • Between the grounding and U, V, or W of the servomotor • Between phases U, V, or W	• Replace the SERVOPACK. • Contact your Omron Yaskawa representative.
			The overload, or the regenerative power exceeds the regenerative power processing capacity.	Reconsider the load and operation conditions.
			The direction or the distance of the SERVOPACK to other devices is incorrect. Heat around the SERVOPACK occurred.	Correct the installation conditions so that the ambient temperature for the SERVOPACK is 55 °C max.
			The output exceeds the rating.	Reduce the load.
			Combination of SERVOPACK and servomotor is incorrect.	Check the relevant catalogue and select the correct combination.

(cont'd)

Alarm Display	Alarm Name	Situation at Alarm Occurrence	Cause	Corrective Actions
A.100	Overcurrent	Occurred when the power supply was turned ON or while the servomotor was running.	The SERVOPACK is faulty.	• Replace the SERVOPACK. • Contact your Omron Yaskawa representative.
			The servomotor is faulty.	Check the resistance between lines of the servomotor, and replace the servomotor if any unbalance is found.
A.280	Emergency Stop	Occurred during execution of MECHATROLINK-II command SV_ON.	The emergency stop signal is not connected.	Wire correctly according to the descriptions in *3.7.3 Emergency Stop Signal Input*.
		Occurred while the servomotor was running.	The emergency stop signal was input.	Refer to *4.7.5 Operation Sequence When E-STP Signal is Input*.
			Malfunction occurred on the emergency stop signal	Check and then correct the wiring.
A.400	Overvoltage	Occurred when the power supply was turned ON.	The AC power supply voltage is 290 V or more.	Keep the AC power supply voltage to the specified range.
			The SERVOPACK is faulty.	• Replace the SERVOPACK. • Contact your Omron Yaskawa representative.
		Occurred during operation.	AC power supply voltage changed excessively.	Keep the AC power supply voltage within the specified range.
			The servomotor speed is high and the load moment of inertia is excessively large (insufficient regenerative power processing capacity).	• Reconsider the load and operation conditions. • Install a regenerative unit.
			The SERVOPACK is faulty.	• Replace the SERVOPACK. • Contact your Omron Yaskawa representative.
A.410	Undervoltage	Occurred when the power supply was turned ON.	The power supply was turned ON again before the SERVOPACK power supply was turned OFF.	Turn ON the power supply again after the REF LED goes out.
			A temporary power failure occurred.	Reset the alarm, and then restart the operation.
			The SERVOPACK is faulty.	• Replace the SERVOPACK. • Contact your Omron Yaskawa representative.

(cont'd)

Alarm Display	Alarm Name	Situation at Alarm Occurrence	Cause	Corrective Actions
A.510	Overspeed	Occurred when the power supply was turned ON.	The SERVOPACK is faulty.	• Replace the SERVOPACK. • Contact your Omron Yaskawa representative.
		Occurred when the servomotor started running or ran at high speed.	The order of phases U, V, and W of the servomotor wiring is incorrect.	Correct the servomotor main circuit cable wiring.
			The encoder wiring is incorrect.	Correct the encoder wiring.
			Malfunction occurred because of noise interference in the encoder line.	Take measures against noise for the encoder line.
			The input position reference was too large.	Reduce the reference value.
			The SERVOPACK is faulty.	• Replace the SERVOPACK. • Contact your Omron Yaskawa representative.
A.710	Overload: High load	Occurred when the power supply was turned ON.	The SERVOPACK is faulty.	• Replace the SERVOPACK. • Contact your Omron Yaskawa representative.
		Occurred while the servomotor was running.	The effective torque exceeds the rated torque, or the starting torque largely exceeds the rated torque.	Reconsider the load and operation conditions.
			The SERVOPACK is faulty.	• Replace the SERVOPACK. • Contact your Omron Yaskawa representative.

(cont'd)

Alarm Display	Alarm Name	Situation at Alarm Occurrence	Cause	Corrective Actions
A.720	Overload: Low load	Occurred when the servo was turned ON.	The servomotor wiring is incorrect or connection is faulty.	Correct the servomotor main circuit cable wiring.
			The encoder wiring is incorrect or connection is faulty.	Correct the encoder wiring.
			The SERVOPACK is faulty.	• Replace the SERVOPACK. • Contact your Omron Yaskawa representative.
		Occurred when the servomotor did not run by the reference input.	The servomotor wiring is incorrect or connection is faulty.	Correct the servomotor main circuit cable wiring.
			The encoder wiring is incorrect or connection is faulty.	Correct the encoder wiring.
			The starting torque exceeds the maximum torque.	Reconsider the load and operation conditions.
			The SERVOPACK is faulty.	• Replace the SERVOPACK. • Contact your Omron Yaskawa representative.
		Occurred while the servomotor was running.	The effective torque exceeds the rated torque, or the starting torque largely exceeds the rated torque.	Reconsider the load and operation conditions.
			The SERVOPACK is faulty.	• Replace the SERVOPACK. • Contact your Omron Yaskawa representative.
A.730	Dynamic Brake Overload	Occurred when the servo was turns OFF while the servomotor was running.	The servomotor did not stop 3 seconds or more after the servo was turned OFF.	Reconsider the load and operation conditions.
				Check if the servomotor is rotated by external force.

(cont'd)

Alarm Display	Alarm Name	Situation at Alarm Occurrence	Cause	Corrective Actions
A.7AA	Board Overheated	Occurred when the power supply was turned ON.	The SERVOPACK is faulty.	• Replace the SERVOPACK. • Contact your Omron Yaskawa representative.
			Overload alarm was often reset by turning OFF the power supply.	• Reconsider the load and operation conditions. • Reconsider the servomotor capacity.
		Occurred while the servomotor was running.	The load exceeds the rating.	• Reconsider the load and operation conditions. • Reconsider the servomotor capacity.
			The ambient temperature around the SERVOPACK is 55 °C or more.	Correct the installation conditions so that the ambient temperature around the SERVOPACK is kept to 55 °C max.
			The SERVOPACK is faulty.	• Replace the SERVOPACK. • Contact your Omron Yaskawa representative.
			Overload alarm was often reset by turning OFF the power supply.	• Reconsider the load and operation conditions. • Reconsider the servomotor capacity.
			The direction or the distance of the SERVOPACK to other devices is incorrect. Heat radiation of the panel or heat around the SERVOPACK occurred.	Correct the installation conditions so that the ambient temperature around the SERVOPACK is kept to 55° C max.
A.7Ab	SERVOPACK Built-in Fan Stop	Occurred when the power supply was turned ON or while the servomotor was running.	The SERVOPACK built-in fan stopped.	Replace the cooling fan according to the descriptions in *9 Inspections*.
			The air inlet/outlet of the cooling fan is blocked with dirt or foreign matters.	Inspect the cooling fan.
A.b33	Current Detection Error	Occurred when the servo was turned ON.	The SERVOPACK is faulty.	• Replace the SERVOPACK. • Contact your Omron Yaskawa representative.
			The servomotor main circuit cable is disconnected.	Check and then correct the servomotor main circuit cable wiring.
A.b6A	MECHATROLINK-II Communication LSI Error	Occurred when the power supply was turned ON.	MECHATROLINK-II LSI is faulty.	• Replace the SERVOPACK. • Contact your Omron Yaskawa representative.

(cont'd)

Alarm Display	Alarm Name	Situation at Alarm Occurrence	Cause	Corrective Actions
A.bF0	System Alarm 0	Occurred when the power supply was turned ON or while the servomotor was running.	The SERVOPACK is faulty.	• Replace the SERVOPACK. • Contact your Omron Yaskawa representative.
A.bF1	System Alarm 1			
A.bF2	System alarm 2			
A.bF3	System Alarm 3			
A.bF4	System Alarm 4			
A.bFA	System Alarm A			
A.C10	Servo Over-run Detected	Occurred when the power supply was turned ON.	The SERVOPACK is faulty.	• Replace the SERVOPACK. • Contact your Omron Yaskawa representative.
		Occurred when the servo was turned ON or when the reference was input.	The order of phases U, V, and W in the servomotor wiring is incorrect.	Correct the servomotor main circuit cable wiring.
			The encoder is faulty.	• Replace the servomotor. • Contact your Omron Yaskawa representative.
			The SERVOPACK is faulty.	• Replace the SERVOPACK. • Contact your Omron Yaskawa representative.
A.C20 A.C50 A.C90	Incorrect Phase Detection Incorrect Polarity Detection Encoder Signal Error	Occurred when the power supply was turned ON or while the servomotor was running.	The encoder wiring and the contact are incorrect.	Correct the encoder wiring.
			Noise interference because of incorrect specifications of encoder cable.	Use twisted-pair or twisted-pair shielded wire with a core of at least 0.12 mm^2.
			Noise interference because the wiring distance for the encoder cable is too long.	The wiring distance for the encoder cable must be 20 m max.
			The encoder cable is disconnected.	Replace the encoder cable.
			The encoder is faulty.	• Replace the servomotor. • Contact your Omron Yaskawa representative.
			The SERVOPACK is faulty.	• Replace the SERVOPACK. • Contact your Omron Yaskawa representative.

(cont'd)

Alarm Display	Alarm Name	Situation at Alarm Occurrence	Cause	Corrective Actions
A.d00	Position Error Pulse Overflow	Occurred when the power supply was turned ON.	The SERVOPACK is faulty.	• Replace the SERVOPACK. • Contact your Omron Yaskawa representative.
		Occurred when the servomotor ran at high speed.	Wiring of the servomotor U, V, and W is incorrect.	Correct the servomotor main circuit cable wiring.
			The encoder wiring and the contact are incorrect.	Correct the encoder wiring.
			The SERVOPACK is faulty.	• Replace the SERVOPACK. • Contact your Omron Yaskawa representative.
		Occurred when the servomotor did not run with position reference input.	Wiring of the servomotor U, V, and W is incorrect.	Correct the servomotor main circuit cable wiring.
			The SERVOPACK is faulty.	• Replace the SERVOPACK. • Contact your Omron Yaskawa representative.
		Normal movement, but occurred with a long distance reference input.	The input position reference was too large.	Reduce the reference value.
			The load is too large.	Reduce the load.
A.E02 A.EA2	MECHATROLINK-II Internal Synchronization Error	Occurred when MECHATROLINK-II communications started or during MECHATROLINK-II communications.	Communications with the host controller disconnected while the MECHATROLINK-II connection was established with a CONNECT command, and then communications was started again.	Turn the power supply OFF and then ON again, or send a DISCONNECT command to release communications and set up communications again.
			The MECHATROLINK-II wiring is incorrect.	• Correct the MECHATROLINK-II communications cable wiring. • Connect terminators correctly.
			MECHATROLINK-II data receive error occurred because of noise interference.	Take measures against noise. • Reconsider wirings for MECHATROLINK-II communications cable and FG. • Attach a ferrite core to the MECHATROLINK-II communications cable.
			The SERVOPACK is faulty.	• Replace the SERVOPACK. • Contact your Omron Yaskawa representative.
A.ED0	MECHATROLINK-II Internal Command Error 0	Occurred when MECHATROLINK-II communications started or during MECHATROLINK-II communications.	The SERVOPACK is faulty.	• Replace the SERVOPACK. • Contact your Omron Yaskawa representative.

(cont'd)

Alarm Display	Alarm Name	Situation at Alarm Occurrence	Cause	Corrective Actions
A.ED1	MECHATROLINK-II Internal Command Error 1	Occurred when MECHATROLINK-II communications started or during MECHATROLINK-II communications.	The SERVOPACK is faulty.	• Replace the SERVOPACK. • Contact your Omron Yaskawa representative.
A.E40	MECHATROLINK-II Transmission Cycle Setting Error	Occurred when MECHATROLINK-II communications started.	The setting of MECHATROLINK-II transmission cycle is out of the specifications range.	Set the MECHATROLINK-II transmission cycle to a proper value in the host controller.
A.E50	MECHATROLINK-II Synchronization Error	Occurred when MECHATROLINK-II communications started or during MECHATROLINK-II communications.	WDT data of the host controller for MECHATROLINK-II communications is not updated correctly.	Update the WDT data in the host controller correctly.
A.E51	MECHATROLINKII Synchronization Failed	Occurred when MECHATROLINK-II communications started.	WDT data of the host controller for MECHATROLINK-II communications is not updated correctly.	Update the WDT data in the host controller correctly.
A.E60	MECHATROLINK-II Communications Error	Occurred when MECHATROLINK-II communications started or during MECHATROLINK-II communications.	Communications with the host controller disconnected while the MECHATROLINK-II connection was established with a CONNECT command, and then communications was started again.	Turn the power supply OFF and then ON again, or send a DISCONNECT command to release communications and set up communications again.
			The MECHATROLINK-II wiring is incorrect.	• Correct the MECHATROLINK-II communications cable wiring. • Connect terminators correctly.
			MECHATROLINK-II data receive error occurred because of noise interference.	Take measures against noise. • Reconsider wirings for MECHATROLINK-II communications cable and FG. • Attach a ferrite core to the MECHATROLINK-II communications cable.
			The SERVOPACK is faulty.	• Replace the SERVOPACK. • Contact your Omron Yaskawa representative.

(cont'd)

Alarm Display	Alarm Name	Situation at Alarm Occurrence	Cause	Corrective Actions
A.E61	MECHATROLINK-II Transmission Cycle Error	Occurred when MECHATROLINK-II communications started or during MECHATROLINK-II communications.	Communications with the host controller disconnected while the MECHATROLINK-II connection was established with a CONNECT command, and then communications was started again.	Turn the power supply OFF and then ON again, or send a DISCONNECT command to release communications and set up the communications again.
			The MECHATROLINK-II wiring is incorrect.	• Correct the MECHATROLINK-II communications cable wiring. • Connect terminators correctly.
			MECHATROLINK-II data receive error occurred because of noise interference.	Take measures against noise. • Reconsider wirings for MECHATROLINK-II communications cable and FG. • Attach a ferrite core to the MECHATROLINK-II communications cable.
			The SERVOPACK is faulty.	• Replace the SERVOPACK. • Contact your Omron Yaskawa representative.

8.3.2 Warning Display and Troubleshooting

Warning Display	Warning Name	Situation at Warning Occurrence	Cause	Corrective Actions
A.910	Overload Warning before the overload alarm A.710 or A.720 occurs)	Occurred when the servo was turned ON.	The servomotor wiring is incorrect or connection is faulty.	Correct the servomotor main circuit cable wiring.
			The encoder wiring is incorrect or connection is faulty.	Correct the encoder wiring.
			The SERVOPACK is faulty.	• Replace the SERVOPACK. • Contact your Omron Yaskawa representative.
		The servomotor did not run with a reference input.	The servomotor wiring is incorrect or connection is faulty.	Correct the servomotor main circuit cable wiring.
			The encoder wiring is incorrect or connection is faulty.	Correct the encoder wiring.
			The starting torque exceeds the maximum torque.	Reconsider the load and operation conditions.
			The SERVOPACK is faulty.	• Replace the SERVOPACK. • Contact your Omron Yaskawa representative.
		Occurred while the servomotor was running.	The effective torque largely exceeds the rated torque.	Reconsider the load and operation conditions.
			The temperature in the SERVOPACK panel is too high.	Correct the installation conditions so that the ambient temperature aroung the SERVOPACK is kept to 55 °C max.
			The SERVOPACK is faulty.	• Replace the SERVOPACK. • Contact your Omron Yaskawa representative.
A.94A	MECHATROLINK-II Data Setting Warning 1	Occurred when PRM_RD, PRM_WR, PPRM_WR, or ADJ command was sent.	The parameter numbers or addresses that cannot be used for the command data was set.	Set the correct parameter numbers and addresses.
A.94b	MECHATROLINK-II Data Setting Warning 2	Occurred when a command was sent.	A value outside of the setting range was set in the command data.	Set a value within the setting range.
A.94d	MECHATROLINK-II Data Setting Warning 4	Occurred when ID_RD, PRM_RD, PRM_WR, PPRM_WR, or ADJ command was sent.	The data size that was set in the command data is incorrect.	Set a value with a correct data size.

(cont'd)

Warning Display	Warning Name	Situation at Warning Occurrence	Cause	Corrective Actions
A.95A	MECHATROLINK-II Command Warning 1	Occurred when a command was sent.	The conditions of the command execution were not satisfied.	• Send the command after the conditions of the command execution are satisfied. • Refer to descriptions on each command for the execution conditions of the command.
A.95b	MECHATROLINK-II Command Warning 2	Occurred when a command was sent.	The SERVOPACK received an unsupported command.	Do not sent unsupported commands.
A.95d	MECHATROLINK-II Command Warning 4	Occurred when LATCH, EX_POSING, ZRET, LTMOD_ON, or LTMOD_OFF command was sent.	The sending conditions for latch related command were not satisfied.	• Send the command after the conditions of the command execution are satisfied. • Refer to descriptions on each command for the execution conditions of the command.
A.95E	MECHATROLINK-II Command Warning 5	Occurred when a command was sent.	The conditions for combining a main command and subcommand were not satisfied.	Send a subcommand according to the specified conditions to combine with a main command.
A.960	MECHATROLINK-II Communications Warning	Occurred when MECHATROLINK-II communications started or during communications.	The MECHATROLINK-II wiring is incorrect.	• Correct the MECHATROLINK-II communications cable wiring. • Connect correctly terminators.
			MECHATROLINK-II data reception error occurred because of noise interference.	Take measures against noise. • Reconsider wirings for MECHATROLINK-II communications cable and FG. • Attach a ferrite core to the MECHATROLINK-II communications cable.

8.4 Troubleshooting for Malfunction without Alarm Display

Troubleshooting for malfunctions that cause no alarm display on the host controller and CX-Drive connected to the SERVOPACK through MECHATROLINK-II communications is listed below.
Contact your Omron Yaskawa representative if the problem cannot be solved by the described corrective action.

Note: For shaded sections, Turn OFF the servo system power supply before performing the inspections and corrective actions.

Malfunction	Cause	Inspection	Corrective Actions
The PWR LED does not light up when the power supply turns ON.	Incorrect wiring of the power supply cable	Check if the power supply input is within the range of the power supply voltage.	Correct the voltage range of the power supply.
		Check if the wiring of the power supply input is correct.	Correct the wiring.
	Incorrect wiring of the regenerative unit	Check if the wiring of the regenerative unit cable is correct.	Replace the SERVOPACK and regenerative unit, and correct the wiring.
Servomotor does not rotate.	Incorrect wiring or disconnection of I/O signal	Check if the connector is properly installed and wiring is correct.	Correct the wiring of the connector.
	The servomotor and encoder wirings are disconnected.	Check the wiring.	Correct the wiring.
	Overloaded	Run the servomotor without load.	Reduce the load, or replace the servomotor with a larger capacity.
	Motion command was not sent.	Check the command sent from the host controller.	Send a motion command.
	Servo ON (SV_ON) command was not sent.	Check the command sent from the host controller.	Send a servo ON (SV_ON) command.
	Forward run prohibited (P-OT) and reverse run prohibited (N-OT) input signals are OFF.	Check the P-OT or the N-OT input signal.	Turn ON either the P-OT or the N-OT input signal.
	The power supply is OFF.	Check the PWR LED to see if the power supply is ON.	Turn the power supply ON.
		Check the voltage between the power supply terminals.	Correct the power supply ON circuit.
	The SERVOPACK is faulty.	The SERVOPACK board is faulty.	Replace the SERVOPACK.
Servomotor runs instantaneously, and then stops.	The servomotor wiring is incorrect.	Check the servomotor wiring.	Correct the servomotor wiring.
	The encoder wiring is incorrect.	Check the encoder wiring.	Check the encoder wiring.

(cont'd)

Malfunction	Cause	Inspection	Corrective Actions
Servomotor speed is unstable.	The connection to the servomotor is defective.	Check if the power line (phase-U, V, and W) and encoder connectors are securely connected.	Retighten any loose terminals or connectors.
	The concentricity of coupling between the servomotor and machine shafts or loose screws	Check the coupled section of machine shaft.	Correct or adjust the machine.
		Rotate the servomotor without load after disconnecting the servomotor from the machine.	
	The load moment of inertia exceeds allowable value of the SERVOPACK.	Rotate the servomotor without load after disconnecting the servomotor from the machine.	Reduce the load.
			Replace with the larger capacity servomotor and SERVOPACK.
Servomotor rotates without reference input.	The SERVOPACK is faulty.	The SERVOPACK board is faulty.	Replace the SERVOPACK.
Servomotor is overheated.	The ambient temperature is high.	Check if the ambient temperature around the servomotor is 40 °C max.	Keep the ambient temperature around the servomotor to 40 °C max. (Use fan or air conditioner.)
	Insufficient ventilation	Check if ventilation is not obstructed.	Maintain proper ventilation.
	Overloaded	Rotate the servomotor without load after disconnecting the servomotor from the machine.	Reduce the load.
			Replace with the larger capacity servomotor and SERVOPACK.
Servomotor holding brake does not operate.	The power is being supplied to the holding brake.	Check if the power is being supplied to the holding brake.	Configure the circuit so that the power supply of the holding brake is turned OFF when holding the load with the holding brake at the servomotor stop.
The servomotor does not stop or has difficulty to stop when the servo turns OFF while the servomotor is running.	Overloaded	Check the following: • Is the load too heavy? • Is the servomotor speed too high?	Reconsider the load conditions and replace the SERVOPACK.
	The emergency stop circuit is faulty.	–	Replace the SERVOPACK.

(cont'd)

Malfunction	Cause	Inspection	Corrective Actions
The emergency stop function does not operate.	The switch for the external emergency stop input is faulty or incorrect wiring.	Check the switch for the external emergency stop input or wiring.	Repair the switch for the external emergency stop input switch or correct the wiring.
	Emergency stop input signal (E-STP) is set to be disabled.	Check the parameter Pn515.2 setting.	Correct the parameter Pn515.2 setting.
	The SERVOPACK is faulty.	The SERVOPACK board is faulty.	Replace the SERVOPACK.
Abnormal noise from the servomotor, or vibration from the coupled machine	Incorrect mechanical installation	Check if the servomotor mounting screws are not loose.	Retighten the mounting screws.
		Check if the coupling is misaligned.	Aligh the coupling.
		Check if the coupling is well balanced.	Adjust and balance the coupling.
	Defective bearing	Check for noise and vibration around the bearing.	If any abnormality is found, contact your Omron Yaskawa representative.
	Vibration source in the coupled machine	Check if there is no foreign matter, damage, deformation, or looseness in the machine movable section.	Consult the machine manufacturer and repair.
	Noise interference because of incorrect specifications of encoder cable	Check if twisted pair shielded wires with core of 0.12 mm^2 are used.	Use the specified encoder cable.
	Noise interference because the encoder cable wiring distance is out of the specifications range.	Check the encoder cable length.	The encoder cable wiring distance must be 20 m max.
	Noise interference on the signal line because the encoder cable is pinched/bent or its sheath is damaged.	Check if the encoder cable is not damaged.	Modify the encoder cable layout.
	Excessive noise interference to the encoder cable	Check if the encoder cable is not bundled with or too closed to high voltage lines.	Change the encoder cable layout so that no surge voltage is applied.
	FG potential varies by influence of machines such as welder installed on the servomotor side.	Check if the machine is correctly grounded (check for faulty grounding).	Ground the machine separately from PG side FG.

(cont'd)

Malfunction	Cause	Inspection	Corrective Actions
Abnormal noise from the servomotor, or vibration from the coupled machine	Excessive vibration and shock to the encoder	Check if the vibration from the machine occurred or if the servomotor installation is correct (check for mounting surface accuracy, fixing, and alignment).	Reduce the machine vibration, or secure the servomotor installation.
	Incorrect filter setting	Check if the setting for the reference filter (FIL) setting is correct.	Increase the value of the rotary switch.
Overtravel (OT) (Movement over the zone specified by the host controller)	The forward/reverse run prohibited input signal does not change. (P-OT (CN1-4) or N-OT (CN1-3) is at H-level.)	Check if the voltage of +24 V external power supply for input signal is correct.	Connect to the +24 V external power supply.
		Check if the overtravel limit switch (SW) operates correctly.	Correct the overtravel limit switch (SW).
		Check if the wiring of the overtravel limit switch (SW) is correct.	Correct the overtravel limit switch (SW) wiring.
	The forward/reverse run prohibited input signal does not operate normally. (P-OT or N-OT signal sometimes changes.)	Check for the fluctuation of the voltage of the +24 V external power supply for input signal.	Stabilize the +24 V power supply voltage.
		Check if the overtravel limit switch (SW) operates correctly.	Adjust the overtravel limit switch (SW) so that it operates correctly.
		Check if the wiring of the overtravel limit switch (SW) is correct. (Check for damaged cable or loose screws.)	Correct the overtravel limit switch (SW) wiring.
	The forward/reverse run prohibited input signal (P-OT/N-OT) is set to "Always enabled."	Check the parameter Pn50A.3 "P-OT signal selection."	Correct the setting of parameter Pn50A.3.
		Check the parameter Pn50B.0 "N-OT signal selection."	Correct the setting of parameter Pn50B.0.
	Improper position setting of the overtravel limit switch	The distance to the overtravel limit switch (OTLS) is too short considering the coasting distance.	Correct the OTLS position.
	Noise interference because of incorrect specifications of encoder cable.	Check if twisted pair shielded wires with core of 0.12 mm^2 are used.	Use the specified encoder cable.
	Noise interference because the encoder cable wiring distance is out of the specifications range.	The encoder cable wiring distance must be 20 m max.	The wiring distance of the encoder cable must be within the specified range.
	Noise interference because of damaged encoder cable	Check if the encoder cable is not pinched/bent or its sheath is not damaged.	Modify the encoder cable layout.

(cont'd)

Malfunction	Cause	Inspection	Corrective Actions
Overtravel (OT) (Movement over the zone specified by the host controller)	Excessive noise interference to the encoder cable	Check if the encoder cable is not bundled with or too closed to high-voltage lines.	Change the encoder cable layout so that no surge voltage is applied.
	FG potential varies by influence of machines such as welder installed on the servomotor side.	Check if the machine is correctly grounded (check for faulty grounding).	Ground the machine separately from PG side FG.
	SERVOPACK pulse count error by influence of noise	Check if the signal line from the encoder is not influenced by noise.	Take measures against noise for the encoder wiring.
	Excessive vibration and shock to the encoder	Check if the vibration from the machine occurred or if the servomotor installation is correct (check for mounting surface accuracy, fixing, and alignment).	Reduce the machine vibration, or secure the servomotor installation.
	The encoder is faulty.	The encoder is faulty.	Replace the servomotor.
	The SERVOPACK is faulty.	The SERVOPACK is faulty.	Replace the SERVOPACK.
Position error (without alarm)	Unsecured coupling between machine and servomotor	Check if the coupling between the machine and servomotor is not displaced.	Secure the coupling between the machine and servomotor.
	The encoder is faulty (pulse count does not change).	Check if the encoder is faulty.	Replace the servomotor.

9 Inspections

9.1 Regular Inspections

For inspection and maintenance of the SERVOPACK, follow the inspection procedures in the following table at least once every year. Other routine inspections are not required.

Item	Frequency	Procedure	Comments
Exterior	At least once a year	Check for dust, dirt, and oil on the surfaces.	Clean with cloth or compressed air.
Loose Screws		Check for loose connector screws.	Tighten any loose screws.

9.2 Part's Life Expectancy

The following electric or electrical parts are subject to mechanical wear or deterioration over time. If an unusual noise or vibration occurs, refer to the life expectancy table and contact your Omron Yaskawa representative. After examining the part in question, we will determine whether the parts should be replaced or not. When the part has expired before the expected time, further inspection will be required.

Part	Life Expectancy	Comments
Cooling Fan	30,000 hours	Life depends on operation conditions. Check that there is no unusual noise or vibration when inspecting.

Note: 1. The life expectancy listed in the table is a reference period that may be affected by the environmental and operating conditions.
2. The recommended models of the replacement cooling fans are:

SERVOPACK	Model	Manufacturer
SJDE-04ANA-OY	JZSP-CHF08-1	SUN-WA TECHNOS CORPORATION
SJDE-08ANA-OY	JZSP-CHF08-2	

9.3 Replacement of Cooling Fan

⚠ CAUTION

- Do not open the SERVOPACK case for 5 minutes after the power supply indicator (PWR LED) goes out. High voltage may remain in the SERVOPACK after the power supply has been turned OFF.
- After turning OFF the power supply, wait 15 minutes before replacing the cooling fan.

  Failure to observe this caution may result in burns because the heat sink is hot.
- Mount the cooling fan in the correct way.
- Improper mounting may result in the breakdown of the SERVOPACK.

■ 400 W SERVOPACKs

1. Open the front cover of the SERVOPACK.
   - Press the tip of a flathead screwdriver against each of the two notches on the SERVOPACK to dislodge the hooks.
   - Insert the tip of a flathead screwdriver into the two notches on the SERVOPACK one at a time and pry the front cover off.

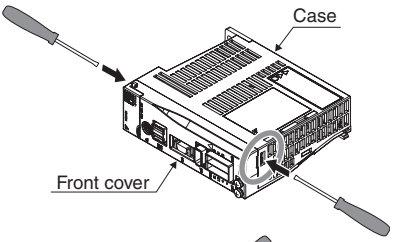

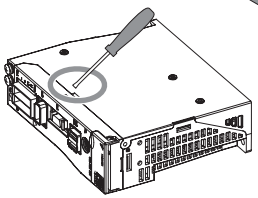

2. Open the case of the SERVOPACK.

   Insert the tip of a flathead screwdriver into the two notches on the SERVOPACK one at a time and pry the hooks loose.

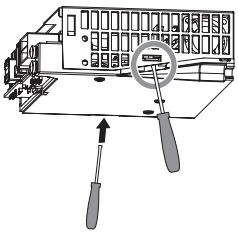

3. Lift up to remove the case.

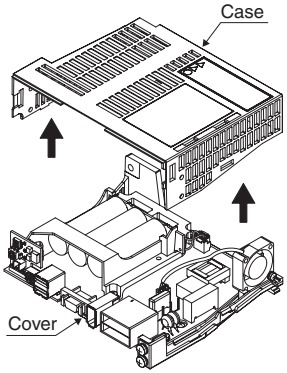

4. Disconnect the cooling-fan cable from the fan connector on the SERVOPACK.

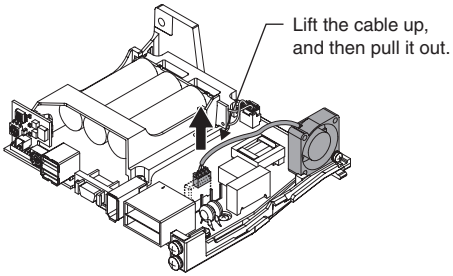

5. Unscrew the cooling fan and remove it.

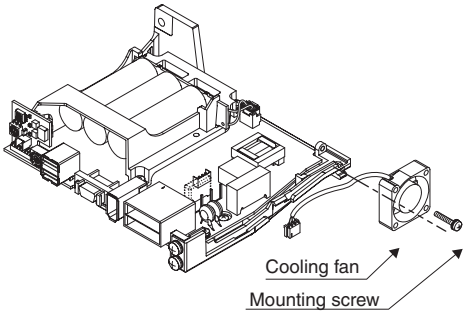

6. Install the new cooling fan.
   (Type: JZSP-CHF08-01)
   Caution: Before installing the new cooling fan, make sure that the arrows on the heat sink and the arrow on the cooling fan face the direction as shown in the diagram.

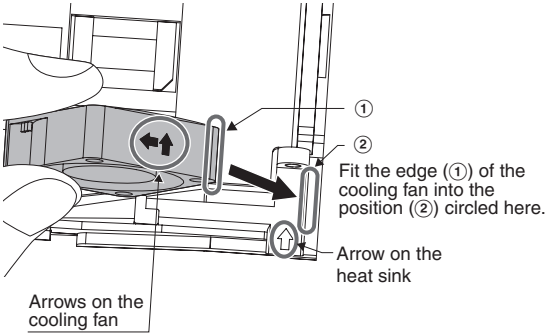

7. Secure the new cooling fan to the SERVOPACK with mounting screws.

8. Connect the cooling-fan cable to the fan connector on the SERVOPACK.

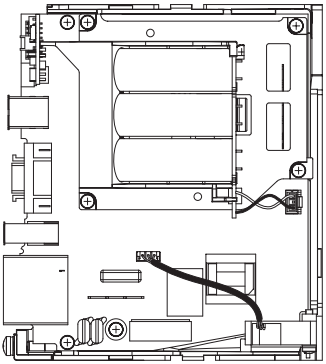

9. Reattach the case and cover to the SERVOPACK in their original positions.

■ 750 W SERVOPACKs

1. Remove the front cover of the SERVOPACK.
   - Press the tip of a flathead screwdriver against each of the notches Ⓐ on the SERVOPACK to dislodge the hooks.
   - Insert the tip of a flathead screwdriver into the notches Ⓑ on the SERVOPACK one at a time and pry the front cover off.

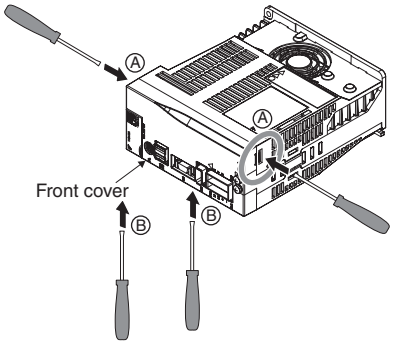

2. Open the case of the SERVOPACK.

   Insert the tip of a flathead screwdriver into the two notches on the SERVOPACK one at a time and pry the hooks loose.

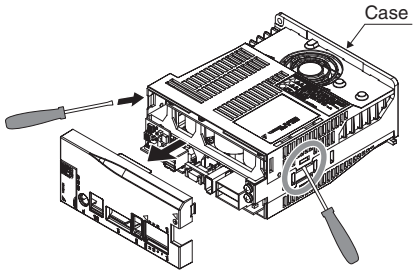

3. Remove the case.

   Lift up to pull the case of the SERVOPACK off.

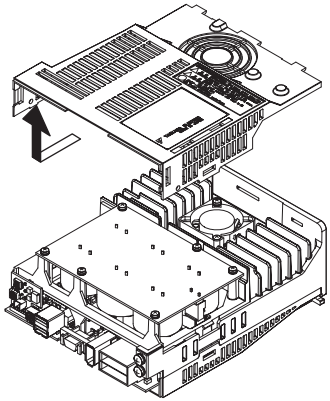

4. Remove the six mounting screws.

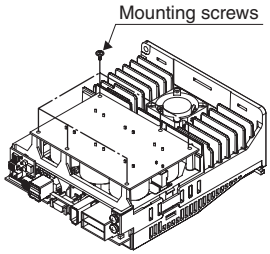

5. Disconnect the cooling-fan cable from the fan connector on the SERVOPACK.

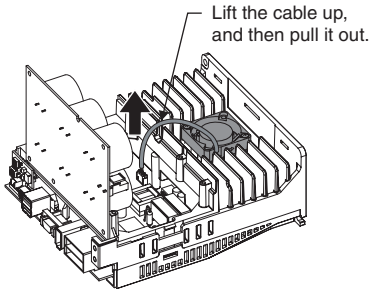

6. Remove two mounting screws on the cooling fan.

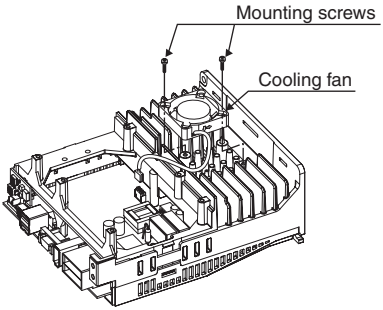

7. Install the new cooling fan.
   (Type: JZSP-CHF08-01)

   Thread the cooling-fan cable through the opening (Ⓒ) as shown in Diagram A.

   Caution: Make sure that the arrow on the heat sink and the arrows on the cooling fan face the direction as shown in Diagram B.

Diagram A

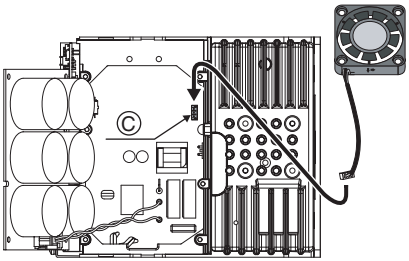

Diagram B

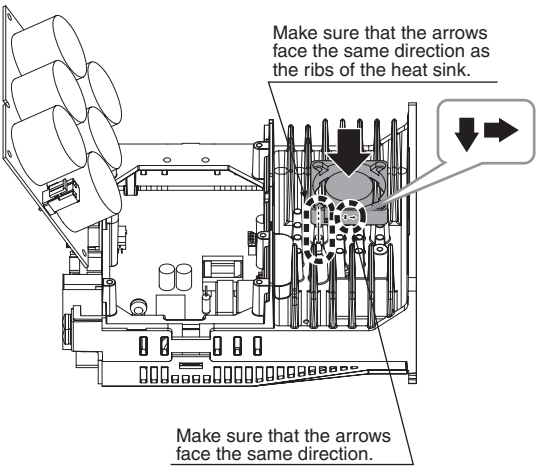

8. Secure the cooling fan on the SERVOPACK with the mounting screws.

9. Reattach the case and front cover to the SERVPACK in their original positions.

10 Specifications

10.1 Specifications

SERVOPACK Model SJDE-			01ANA-OY	02ANA-OY	04ANA-OY	08ANA-OY
Basic Specifications	Max. Applicable Servomotor Capacity [kW]		0.1	0.2	0.4	0.75
	Continuous Output Current [Ams]		0.84	1.1	2	3.7
	Instantaneous Max. Output Current [Ams]		2.5	3.3	6	11.1
	Input Power Supply (Common for main circuit and control circuit)	Voltage	Single-phase 200 to 230 VAC +10 to -15 %			
		Frequency	50/60 Hz ±5%			
		Capacity (at rated output) [kVA]	0.40	0.75	1.2	2.2
	SERVOPACK Power Loss (At rated output) [W]		14	16	24	35
	Input Control Method		Capacitor input type single-phase full-wave rectification (with inrush current limiting resistor)			
	Output Control Method		PWM control, sine-wave current driven			
	Allowable Load Moment of Inertia [kg· m^2]		0.6×10^{-4}	3×10^{-4}	5×10^{-4}	10×10^{-4}
	Leakage Current	Power Supply Frequency	3.5 mA max.			

(cont'd)

SERVOPACK Model SJDE-			01ANA-OY	02ANA-OY	04ANA-OY	08ANA-OY
Built-in Functions	Dynamic Brake		Activated when the power supply is turned OFF, when the servo is turned OFF, or when an alarm occurs. (Deactivated after the motor stops; Activated if the power supply is turntd OFF.)			
	Communications for Maintenance		CX-Drive (Modification/initialization of parameters, JOG operation, etc.)			
	Regenerative Energy Processing		Optional (A regenerative unit is required when the regenerative energy is excessively large.)			
	Emergency Stop		Emergency stop (E-STP)			
	Overtravel (OT) Prevention		Forward run prohibited (P-OT), reverse run prohibited (N-OT)			
	Display		Four LED indicator lamps: PWR, RDY, COM, and ALM			
		Power Supply Status Monitor	PWR_LED is unlit when the control/main circuit power supply is OFF. PWR_LED is lit when the control/main circuit power supply is ON.			
		Servo ON/OFF Monitor	RDY_LED is lit when the servo is OFF. RDY_LED blinks when the servo is ON.			
		MECHATROLINK Monitor	COM_LED is unlit when the MECHATROLINK-II is not busy. COM_LED is lit when the MECHATROLINK-II is busy.			
	Feedback		Incremental encoder (8192 pulses/rev.)			
	Reference Resolution Setting (Electronic Gear)		0.01 ≤B/A ≤100			
	Protection		Overcurrent, overvoltage, undervoltage, overload, main circuit sensor error, board temperature error, excessive position error overflow, overspeed, encoder signal error, overrun protection, system error, parameter error.			
MECHATROLINK Communications		Communications Protocol	MECHATROLINK-II			
		Station Address	41H to 5FH (Max. number of slaves: 30)			
		Transmission Speed	10 Mbps			
		Transmission Cycle	1 ms, 1.5 ms, 2 ms, 3 ms, 4 ms			
		Data Length	17 bytes or 32 bytes			
Command Method		Performance	Position control through MECHATROLINK-II communications			
			MECHATROLINK-II commands (For sequence, motion, data setting/reference, monitor, adjustment, and other commands)			
Sequence Input Signals		Fixed inputs	5 points (External latch signal, homing deceleration signal, forward run prohibited signal, reverse fun prohibited signal, and emergency stop signal)			
Sequence Output Signals		Fixed outputs	2 points (Servo alarm and brake interlock)			

10.2 Allowable Moment of Inertia

Servomotor		Multiplication of Rotor Moment of Inertia (Allowable Load Moment of Inertia)
Model	Rated Output	
SJME-01	100 W	$\times$ 9.5 (0.6 $\times$ 10^{-4}kgm^2)
SJME-02	200 W	$\times$ 7.2 (3.0 $\times$ 10^{-4}kgm^2)
SJME-04	400 W	$\times$ 7.1 (5.0 $\times$ 10^{-4}kgm^2)
SJME-08	750 W	$\times$ 6.4 (10.0 $\times$ 10^{-4}kgm^2)

Note: The values are for standard servomotors without brakes.

10.3 Overload Characteristics

The SERVOPACK provides a function to protect the servomotor and SERVOPACK from overloads.

IMPORTANT

- If an overload alarm occurs, remove the cause and wait for at least one minute until the servomotor temperature decreases. And then, turn ON the power supply.
  If the start and stop operation of the servomotor is repeated in a short time of period, the servomotor windings may burn out.
- Always use the SERVOPACK in combination with the correct servomotor model.
- The overload characteristics shown below are the values used when the servomotor is installed on an aluminum heat sink (250 × 250 × 6 (mm)) at the ambient temperature of 40 °C. Use the SERVOPACK and servomotor under the same conditions to obtain the overload characteristics shown below.

The overload characteristics are shown below.

SJME-01 (100 W)

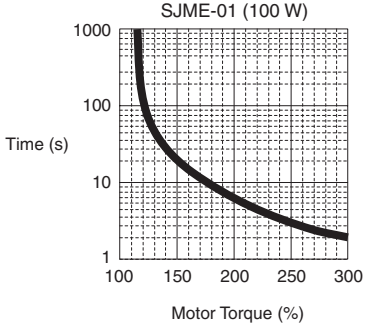

Example:
If the motor torque is 300 %, an overload alarm will occur in approximately two second

SJME-02 (200 W) to SJME-08(750 W)

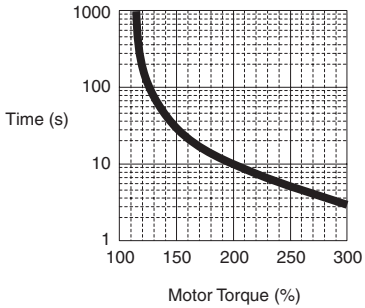

Note: The motor torque (%) is a percentage to the rated torque.

Revision History

The revision dates and numbers of the revised manuals are given on the bottom of the back cover.

MANUAL NO. TOEP C710806 03A

© Printed in Japan July 2006 06-06 ◇1

Revision number

Date of printing

Date of original publication

Date of Printing	Rev. No.	Section	Revised Content
June 2006	-	-	First edition
July 2006	◇1	Preface	Addition: Trademarks of the MECHATROLINK Members Association
January 2007	01	All	Revision 01 for OYMC

OMRON EUROPE B.V. Wegalaan 67-69, NL-2132 JD, Hoofddorp, The Netherlands.
Tel: +31 (0) 23 568 13 00 Fax: +31 (0) 23 568 13 88 www.omron-industrial.com

Austria
Tel: +43 (0) 1 80 19 00
www.omron.at

Belgium
Tel: +32 (0) 2 466 24 80
www.omron.be

Czech Republic
Tel: +420 234 602 602
www.omron.cz

Denmark
Tel: +45 43 44 00 11
www.omron.dk

Finland
Tel: +358 (0) 207 464 200
www.omron.fi

France
Tel: +33 (0) 1 56 63 70 00
www.omron.fr

Germany
Tel: +49 (0) 2173 680 00
www.omron.de

Hungary
Tel: +36 (0) 1 399 30 50
www.omron.hu

Italy
Tel: +39 02 32 681
www.omron.it

Middle East & Africa
Tel: +31 (0) 23 568 11 00
www.omron-industrial.com

Netherlands
Tel: +31 (0) 23 568 11 00
www.omron.nl

Norway
Tel: +47 (0) 22 65 75 00
www.omron.no

Poland
Tel: +48 (0) 22 645 78 60
www.omron.com.pl

Portugal
Tel: +351 21 942 94 00
www.omron.pt

Russia
Tel: +7 095 745 26 64
www.omron.ru

Spain
Tel: +34 913 777 900
www.omron.es

Sweden
Tel: +46 (0) 8 632 35 00
www.omron.se

Switzerland
Tel: +41 (0) 41 748 13 13
www.omron.ch

Turkey
Tel: +90 (0) 216 474 00 40 Pbx
www.omron.com.tr

United Kingdom
Tel: +44 (0) 870 752 08 61
www.omron.co.uk

Manufacturer

YASKAWA ELECTRIC CORPORATION

YASKAWA

In the event that the end user of this product is to be the military and said product is to be employed in any weapons systems or the manufacture thereof, the export will fall under the relevand regulations as stipulated in the Foreign Exchange and Foreign Trade Regulations. Therefore, be sure to follow all procedures and submit all relevant documentation according to any and all rules, regulations and laws may apply.
Specifications are subject to change without notice for ongoing product modifications and improvements.

© 2006 OMRON Yaskawa Motion Control. All rights reserved.

Note: Specifications subject to change without notice.
Manual No. TOEP-C71080603-01-OY

OMRON