Manual No.
I63E-EN-01

VS mini J7

Compact General Purpose Inverter

USER'S MANUAL

Thank you for choosing this VARISPEED J7-series product. Proper use and handling of the product will ensure proper product performance, will lengthen product life, and may prevent possible accidents. Please read this manual thoroughly and handle and operate the product with care.

1. To ensure safe and proper use of the OMRON-YASKAWA Inverters, please read this USER'S MANUAL (Cat. No. I63-EN-01) to gain sufficient knowledge of the devices, safety information, and precautions before actual use.
2. The products are illustrated without covers and shieldings for closer look in this USER'S MANUAL. For actual use of the products, make sure to use the covers and shieldings as specified.
3. This USER'S MANUAL and other related user's manuals are to be delivered to the actual end users of the products.
4. Please keep this manual close at hand for future reference.
5. If the product has been left unused for a long time, please inquire at our sales representative.

NOTICE

1. This manual describes the functions of the product and relations with other products. You should assume that anything not described in this manual is not possible.
2. Although care has been given in documenting the product, please contact your OMRON representative if you have any suggestions on improving this manual.
3. The product contains potentially dangerous parts under the cover. Do not attempt to open the cover under any circumstances. Doing so may result in injury or death and may damage the product. Never attempt to repair or disassemble the product.
4. We recommend that you add the following precautions to any instruction manuals you prepare for the system into which the product is being installed.
   - Precautions on the dangers of high-voltage equipment.
   - Precautions on touching the terminals of the product even after power has been turned OFF. (These terminals are live even with the power turned OFF.)
5. Specifications and functions may be changed without notice in order to improve product performance.

Items to Check Before Unpacking

Check the following items before removing the product from the package:

- Has the correct product been delivered (i.e., the correct model number and specifications)?
- Has the product been damaged in shipping?
- Are any screws or bolts loose?

Notice

OMRON-YASKAWA products are manufactured for use according to proper procedures by a qualified operator and only for the purposes described in this manual.

The following conventions are used to indicate and classify precautions in this manual. Always heed the information provided with them. Failure to heed precautions can result in injury to people or damage to property.

⚠ DANGER Indicates an imminently hazardous situation which, if not avoided, will result in death or serious injury. Additionally, there may be severe property damage.

⚠ WARNING Indicates a potentially hazardous situation which, if not avoided, could result in death or serious injury. Additionally, there may be severe property damage.

⚠ Caution Indicates a potentially hazardous situation which, if not avoided, may result in minor or moderate injury, or property damage.

OMRON-YASKAWA Product References

All OMRON-YASKAWA products are capitalized in this manual. The word “Unit” is also capitalized when it refers to an OMRON-YASKAWA product, regardless of whether or not it appears in the proper name of the product.

The abbreviation “Ch,” which appears in some displays and on some OMRON-YASKAWA products, often means “word” and is abbreviated “Wd” in documentation in this sense.

The abbreviation “PC” means Programmable Controller and is not used as an abbreviation for anything else.

Visual Aids

The following headings appear in the left column of the manual to help you locate different types of information.

Note Indicates information of particular interest for efficient and convenient operation of the product.

General Precautions

Observe the following precautions when using the VARISPEED Inverters and peripheral devices.

This manual may include illustrations of the product with protective covers removed in order to describe the components of the product in detail. Make sure that these protective covers are on the product before use.

Consult your OMRON-YASKAWA representative when using the product after a long period of storage.

⚠ WARNING Do not touch the inside of the Inverter. Doing so may result in electrical shock.

⚠ WARNING Operation, maintenance, or inspection must be performed after turning OFF the power supply, confirming that the CHARGE indicator (or status indicators) are OFF, and after waiting for the time specified on the front cover. Not doing so may result in electrical shock.

⚠ WARNING Do not damage, pull on, apply stress to, place heavy objects on, or pinch the cables. Doing so may result in electrical shock.

⚠ WARNING Do not touch the rotating parts of the motor under operation. Doing so may result in injury.

⚠ Caution Do not modify the product. Doing so may result in injury or damage to the product.

⚠ Caution Do not store, install, or operate the product in the following places. Doing so may result in electrical shock, fire or damage to the product.

- Locations subject to direct sunlight.
- Locations subject to temperatures or humidity outside the range specified in the specifications.
- Locations subject to condensation as the result of severe changes in temperature.
- Locations subject to corrosive or flammable gases.
- Locations subject to exposure to combustibles.
- Locations subject to dust (especially iron dust) or salts.
- Locations subject to exposure to water, oil, or chemicals.
- Locations subject to shock or vibration.

⚠ Caution Do not touch the Inverter radiator, regenerative resistor, or Servomotor while the power is being supplied or soon after the power is turned OFF. Doing so may result in a skin burn due to the hot surface.

⚠ Caution Do not conduct a dielectric strength test on any part of the Inverter. Doing so may result in damage to the product or malfunction.

⚠ Caution Take appropriate and sufficient countermeasures when installing systems in the following locations. Not doing so may result in equipment damage.

- Locations subject to static electricity or other forms of noise.
- Locations subject to strong electromagnetic fields and magnetic fields.
- Locations subject to possible exposure to radioactivity.
- Locations close to power supplies.

Transportation Precautions

⚠ **Caution**	Do not hold by front cover or panel , instead, hold by the radiation fin (heat sink) while transporting the product. Doing so may result in injury.
⚠ **Caution**	Do not pull on the cables. Doing so may result in damage to the product or malfunction.
⚠ **Caution**	Use the eye-bolts only for transporting the Inverter. Using them for transporting the machinery may result in injury or malfunction.

Installation Precautions

⚠ **WARNING**	Provide an appropriate stopping device on the machine side to secure safety. (A holding brake is not a stopping device for securing safety.) Not doing so may result in injury.
⚠ **WARNING**	Provide an external emergency stopping device that allows an instantaneous stop of operation and power interruption. Not doing so may result in injury.
⚠ **Caution**	Be sure to install the product in the correct direction and provide specified clearances between the Inverter and control panel or with other devices. Not doing so may result in fire or malfunction.
⚠ **Caution**	Do not allow foreign objects to enter inside the product. Doing so may result in fire or malfunction.
⚠ **Caution**	Do not apply any strong impact. Doing so may result in damage to the product or malfunction.

Wiring Precautions

⚠ **WARNING**	Wiring must be performed only after confirming that the power supply has been turned OFF. Not doing so may result in electrical shock.
⚠ **WARNING**	Wiring must be performed by authorized personnel. Not doing so may result in electrical shock or fire.
⚠ **WARNING**	Be sure to confirm operation only after wiring the emergency stop circuit. Not doing so may result in injury.
⚠ **WARNING**	Always connect the ground terminals to a ground of 100 W or less for the 200V AC class, or 10 W or less for the 400-V AC class. Not connecting to a proper ground may result in electrical shock.
⚠ **Caution**	Install external breakers and take other safety measures against short-circuiting in external wiring. Not doing so may result in fire.
⚠ **Caution**	Confirm that the rated input voltage of the Inverter is the same as the AC power supply voltage. An incorrect power supply may result in fire, injury, or malfunction.
⚠ **Caution**	Connect the Braking Resistor and Braking Resistor Unit as specified in the manual. Not doing so may result in fire.
⚠ **Caution**	Be sure to wire correctly and securely. Not doing so may result in injury or damage to the product.
⚠ **Caution**	Be sure to firmly tighten the screws on the terminal block. Not doing so may result in fire, injury, or damage to the product.
⚠ **Caution**	Do not connect an AC power to the U, V, or W output. Doing so may result in damage to the product or malfunction.

Operation and Adjustment Precautions

⚠ **WARNING**	Turn ON the input power supply only after mounting the front cover, terminal covers, bottom cover, Operator, and optional items. Not doing so may result in electrical shock.
⚠ **WARNING**	Do not remove the front cover, terminal covers, bottom cover, Operator, or optional items while the power is being supplied. Doing so may result in electrical shock or damage to the product.
⚠ **WARNING**	Do not operate the Operator or switches with wet hands. Doing so may result in electrical shock.
⚠ **WARNING**	Do not touch the inside of the Inverter. Doing so may result in electrical shock.
⚠ **WARNING**	Do not come close to the machine when using the error retry function because the machine may abruptly start when stopped by an alarm. Doing so may result in injury.
⚠ **WARNING**	Do not come close to the machine immediately after resetting momentary power interruption to avoid an unexpected restart (if operation is set to be continued in the processing selection function after momentary power interruption is reset). Doing so may result in injury.
⚠ **WARNING**	Provide a separate emergency stop switch because the STOP Key on the Operator is valid only when function settings are performed. Not doing so may result in injury.
⚠ **WARNING**	Be sure to confirm that the RUN signal is turned OFF before turning ON the power supply, resetting the alarm, or switching the LOCAL/REMOTE selector. Doing so while the RUN signal is turned ON may result in injury.
⚠ **Caution**	Be sure to confirm permissible ranges of motors and machines before operation because the Inverter speed can be easily changed from low to high. Not doing so may result in damage to the product.
⚠ **Caution**	Provide a separate holding brake when necessary. Not doing so may result in injury.
⚠ **Caution**	Do not perform a signal check during operation. Doing so may result in injury or damage to the product.
⚠ **Caution**	Do not carelessly change settings. Doing so may result in injury or damage to the product.

Maintenance and Inspection Precautions

⚠ WARNING Do not touch the Inverter terminals while the power is being supplied.

⚠ WARNING Maintenance or inspection must be performed only after turning OFF the power supply, confirming that the CHARGE indicator (or status indicators) is turned OFF, and after waiting for the time specified on the front cover. Not doing so may result in electrical shock.

⚠ WARNING Maintenance, inspection, or parts replacement must be performed by authorized personnel. Not doing so may result in electrical shock or injury.

⚠ WARNING Do not attempt to take the Unit apart or repair. Doing either of these may result in electrical shock or injury.

⚠ Caution Carefully handle the Inverter because it uses semiconductor elements. Careless handling may result in malfunction.

⚠ Caution Do not change wiring, disconnect connectors, the Operator, or optional items, or replace fans while power is being supplied. Doing so may result in injury, damage to the product, or malfunction.

Warning Labels

Warning labels are pasted on the product as shown in the following illustration. Be sure to follow the instructions given there.

Warning Labels

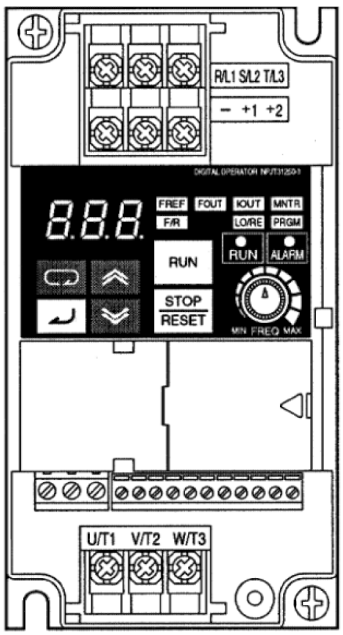

Contents of Warning

- For CIMR-J7AZ20P1 to 20P7 (0.1 to 0.75 kW) and CIMR-J7AZB0P1 to B0P4 (0.1 to 0.4 kW):

- For CIMR-J7AZ21P5 to A4P0 (1.5 to 4.0 kW), CIMR-J7AZB0P7 to B1P5 (0.75 to 1.5 kW), and CIMR-J7AZ40P2 to 44P0 (0.2 to 3.7 kW):

Checking Before Unpacking

Checking the Product

On delivery, always check that the delivered product is the VARISPEED J7 Inverter that you ordered.

Should you find any problems with the product, immediately contact your nearest local sales representative.

Checking the Nameplate

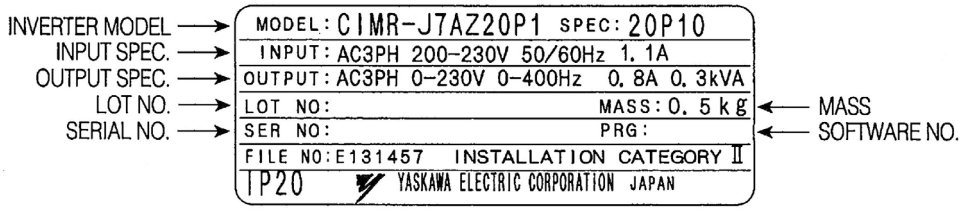

Checking the Model

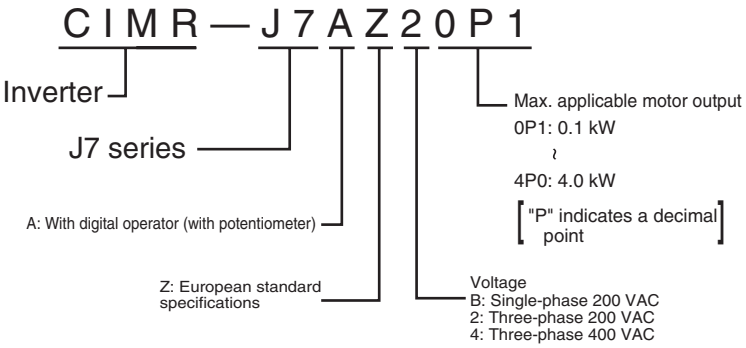

Maximum Applicable Motor Capacity

0P1	0.1 (0.1) kW
0P2	0.25/0.37 (0.2) kW
0P4	0.55 (0.4) kW
0P7	1.1 (0.75) kW
1P5	1.5 (1.5) kW
2P2	2.2 (2.2) kW
4P0	4.0 (4.0) kW

Note The figures in parentheses indicate capacities for motors used outside Japan.

Voltage Class

2	Three-phase 200-V AC input (200-V class)
B	Single-phase 200-V AC input (200-V class)
4	Three-phase 400-V AC input (400-V class)

Checking for Damage Check the overall appearance and check for damage or scratches resulting form transportation.

About this Manual

This manual is divided into the chapters described in the following table. Information is organized by application area to enable you to use the manual more efficiently.

Chapter	Contents
Chapter 1 Overview	Describes features and nomenclature.
Chapter 2 Design	Provides dimensions, installation methods, wiring methods, peripheral device design information, and peripheral device selection information.
Chapter 3 Preparing for Operation and Monitoring	Describes nomenclature and Digital Operator procedures for operating and monitoring Inverters.
Chapter 4 Test Run	Describes the method for controlling a motor through the frequency adjuster on the front of the Inverter. This can be used for trial operation of the system.
Chapter 5 Basic Operation	Describes basic Inverter control functions for users not familiar with Inverters. The functions that must be understood to drive a motor with an Inverter are described.
Chapter 6 Advanced Operation	Describes all of the functions provided by the Inverter. These functions will enable more advanced applications, and includes functions that will improve motor control through the Inverter, such as responsiveness (torque characteristics), increasing speed accuracy, PID control, overtorque detection, and other functions.
Chapter 7 Communications	Describes the RS-422/485 Communications Unit and the general-purpose RS-422/485 communications functions provided by the Inverter, including connection methods.
Chapter 8 Maintenance Operations	Provides maintenance, inspection, and troubleshooting information.
Chapter 9 Specifications	Provides Inverter specifications, as well as the specifications and dimensions of peripheral devices.
Chapter 10 List of Parameters	Lists basic information on Inverter parameters as a reference for users already familiar with Inverter operation. Parameters are listed in order with the page numbers of further information for easy reference.
Chapter 11 Using the Inverter for a Motor	Describes information on using the Inverter for a motor.

Read and Understand this Manual

Please read and understand this manual before using the product. Please consult your OMRON-YASKAWA representative if you have any questions or comments.

Warranty and Limitations of Liability

WARRANTY
OMRON-YASKAWA's exclusive warranty is that the products are free from defects in materials and workmanship for a period of one year (or other period if specified) from date of sale by OMRON-YASKAWA. OMRON-YASKAWA MAKES NO WARRANTY OR REPRESENTATION, EXPRESS OR IMPLIED, REGARDING NON-INFRINGEMENT, MERCHANTABILITY, OR FITNESS FOR PARTICULAR PURPOSE OF THE PRODUCTS. ANY BUYER OR USER ACKNOWLEDGES THAT THE BUYER OR USER ALONE HAS DETERMINED THAT THE PRODUCTS WILL SUITABLY MEET THE REQUIREMENTS OF THEIR INTENDED USE. OMRON DISCLAIMS ALL OTHER WARRANTIES, EXPRESS OR IMPLIED.

LIMITATIONS OF LIABILITY
OMRON-YASKAWA SHALL NOT BE RESPONSIBLE FOR SPECIAL, INDIRECT, OR CONSEQUENTIAL DAMAGES, LOSS OF PROFITS OR COMMERCIAL LOSS IN ANY WAY CONNECTED WITH THE PRODUCTS, WHETHER SUCH CLAIM IS BASED ON CONTRACT, WARRANTY, NEGLIGENCE, OR STRICT LIABILITY. In no event shall the responsibility of OMRON-YASKAWA for any act exceed the individual price of the product on which liability is asserted. IN NO EVENT SHALL OMRON-YASKAWA BE RESPONSIBLE FOR WARRANTY, REPAIR, OR OTHER CLAIMS REGARDING THE PRODUCTS UNLESS OMRON-YASKAWA'S ANALYSIS CONFIRMS THAT THE PRODUCTS WERE PROPERLY HANDLED, STORED, INSTALLED, AND MAINTAINED AND NOT SUBJECT TO CONTAMINATION, ABUSE, MISUSE, OR INAPPROPRIATE MODIFICATION OR REPAIR.

Application Considerations

SUITABILITY FOR USE
OMRON-YASKAWA shall not be responsible for conformity with any standards, codes, or regulations that apply to the combination of products in the customer's application or use of the products. At the customer's request, OMRON-YASKAWA will provide applicable third party certification documents identifying ratings and limitations of use that apply to the products. This information by itself is not sufficient for a complete determination of the suitability of the products in combination with the end product, machine, system, or other application or use. The following are some examples of applications for which particular attention must be given. This is not intended to be an exhaustive list of all possible uses of the products, nor is it intended to imply that the uses listed may be suitable for the products: • Outdoor use, uses involving potential chemical contamination or electrical interference, or conditions or uses not described in this manual. • Nuclear energy control systems, combustion systems, railroad systems, aviation systems, medical equipment, amusement machines, vehicles, safety equipment, and installations subject to separate industry or government regulations. • Systems, machines, and equipment that could present a risk to life or property. Please know and observe all prohibitions of use applicable to the products. NEVER USE THE PRODUCTS FOR AN APPLICATION INVOLVING SERIOUS RISK TO LIFE OR PROPERTY WITHOUT ENSURING THAT THE SYSTEM AS A WHOLE HAS BEEN DESIGNED TO ADDRESS THE RISKS, AND THAT THE OMRON-YASKAWA PRODUCTS ARE PROPERLY RATED AND INSTALLED FOR THE INTENDED USE WITHIN THE OVERALL EQUIPMENT OR SYSTEM.

PROGRAMMABLE PRODUCTS
OMRON-YASKAWA shall not be responsible for the user's programming of a programmable product, or any consequence thereof.

Disclaimers

CHANGE IN SPECIFICATIONS
Product specifications and accessories may be changed at any time based on improvements and other reasons. It is our practice to change model numbers when published ratings or features are changed, or when significant construction changes are made. However, some specifications of the products may be changed without any notice. When in doubt, special model numbers may be assigned to fix or establish key specifications for your application on your request. Please consult with your OMRON-YASKAWA representative at any time to confirm actual specifications of purchased products.

DIMENSIONS AND WEIGHTS
Dimensions and weights are nominal and are not to be used for manufacturing purposes, even when tolerances are shown.

PERFORMANCE DATA
Performance data given in this manual is provided as a guide for the user in determining suitability and does not constitute a warranty. It may represent the result of OMRON-YASKAWA's test conditions, and the users must correlate it to actual application requirements. Actual performance is subject to the OMRON-YASKAWA Warranty and Limitations of Liability.

ERRORS AND OMISSIONS
The information in this manual has been carefully checked and is believed to be accurate; however, no responsibility is assumed for clerical, typographical, or proofreading errors, or omissions.

Table of Contents

CHAPTER 1
Overview. 1

1-1 Function 2
1-2 Nomenclature. 3

CHAPTER 2
Design 5

2-1 Installation 6
2-2 Wiring 10

CHAPTER 3
Preparing for Operation and Monitoring. 33

3-1 Nomenclature. 34
3-2 Outline of Operation 35

CHAPTER 4
Test Run 41

4-1 Procedure for Test Run 43
4-2 Operation Example 45

CHAPTER 5
Basic Operation 49

5-1 Initial Settings 50
5-2 V/f Control. 51
5-3 Setting the Local/Remote Mode 53
5-4 Selecting the Operation Command 54
5-5 Setting the Frequency Reference. 55
5-6 Setting the Acceleration/Deceleration Time 60
5-7 Selecting the Reverse Rotation-prohibit 62
5-8 Selecting the Interruption Mode 62
5-9 Multi-function I/0 63
5-10 Analog Monitor Output 68

CHAPTER 6
Advanced Operation 69

6-1 Setting the Carrier Frequency 70
6-2 DC Injection Braking Function 72
6-3 Stall Prevention Function 73
6-4 Overtorque Detection Function 76
6-5 Torque Compensation Function 77
6-6 Slip Compensation Function 78
6-7 Other Functions 79

Table of Contents

CHAPTER 7
Communications 89

7-1 RS-422/485 Communications Unit 90
7-2 Inverter Settings 93
7-3 Message Communications Basic Format 98
7-4 DSR Message and Response 101
7-5 Enter Command 108
7-6 Setting the Communications Data 109
7-7 Register Number Allocations in Detail 111
7-8 Communications Error Codes 115
7-9 Self-diagnostic Test 116

CHAPTER 8
Communications 117

8-1 Protective and Diagnostic Functions 118
8-2 Troubleshooting 123
8-3 Maintenance and Inspection 128

CHAPTER 9
Specifications 131

9-1 Inverter Specifications 132
9-2 Specifications of Accessories 135
9-3 Option Specifications 142

CHAPTER 10
List of Parameters 145

CHAPTER 11
Using the Inverter for a Motor 159

CHAPTER 1
Overview

1-1 Function 2
1-2 Nomenclature. 3

1-1 Function

The compact simple VARISPEED J7-Series Inverter ensures greater ease of use than any conventional model. The VARISPEED J7 Inverter meets EC Directives and UL/cUL standard requirements for worldwide use.

VARISPEED J7 Inverter Models

The following 3-phase and single-phase 200-V AC-class, and 3-phase 400-V AC-class J7AZ models are available.

Rated voltage	Protective structure	Maximum applied motor capacity kW	Model
3-phase 200 V AC	Panel-mounting models (conforming to IP20)	0.1	CIMR-J7AZ20P1
		0.25	CIMR-J7AZ20P2
		0.55	CIMR-J7AZ20P4
		1.1	CIMR-J7AZ20P7
		1.5	CIMR-J7AZ21P5
		2.2	CIMR-J7AZ22P2
		4.0	CIMR-J7AZ24P0
Single-phase 200 V AC	Panel-mounting models (conforming to IP20)	0.1	CIMR-J7AZB0P1
		0.25	CIMR-J7AZB0P2
		0.55	CIMR-J7AZB0P4
		1.1	CIMR-J7AZB0P7
		1.5	CIMR-J7AZB1P5
3-phase 400 V AC	Panel-mounting models (conforming to IP20)	0.37	CIMR-J7AZ40P2
		0.55	CIMR-J7AZ40P4
		1.1	CIMR-J7AZ40P7
		1.5	CIMR-J7AZ41P5
		2.2	CIMR-J7AZ42P2
		4.0	CIMR-J7AZ44P0

Note It is not possible to connect a Braking Resistor or Braking Unit to a J7-series Inverter. Select an Inverter from another series if the application requires braking control.

International Standards (EC Directives and UL/cUL Standards)

The J7 Inverter meets the EC Directives and UL/cUL standard requirements for worldwide use.

Classification		Applicable standard
EC Directives	EMC Directive	EN50081-2 and EN5008-2
	Low-Voltage Directive	prEN50178
UL/cUL		UL508C

Versatile Easy-to-use Functions

- Incorporates the functions and operability ensured by the conventional J7AZ Series.
- Easy to initialize and operate with the FREQ adjuster on the Digital Operator.
- Ease of maintenance. The cooling fan is easily replaceable. The life of the cooling fan can be prolonged by turning on the cooling fan only when the Inverter is in operation.

Suppression of Harmonics

Connects to DC reactors, thus suppressing harmonics more effectively than conventional AC reactors.

Further improvement in the suppression of harmonics is possible with the combined use of the DC and AC reactors.

1-2 Nomenclature

Panel

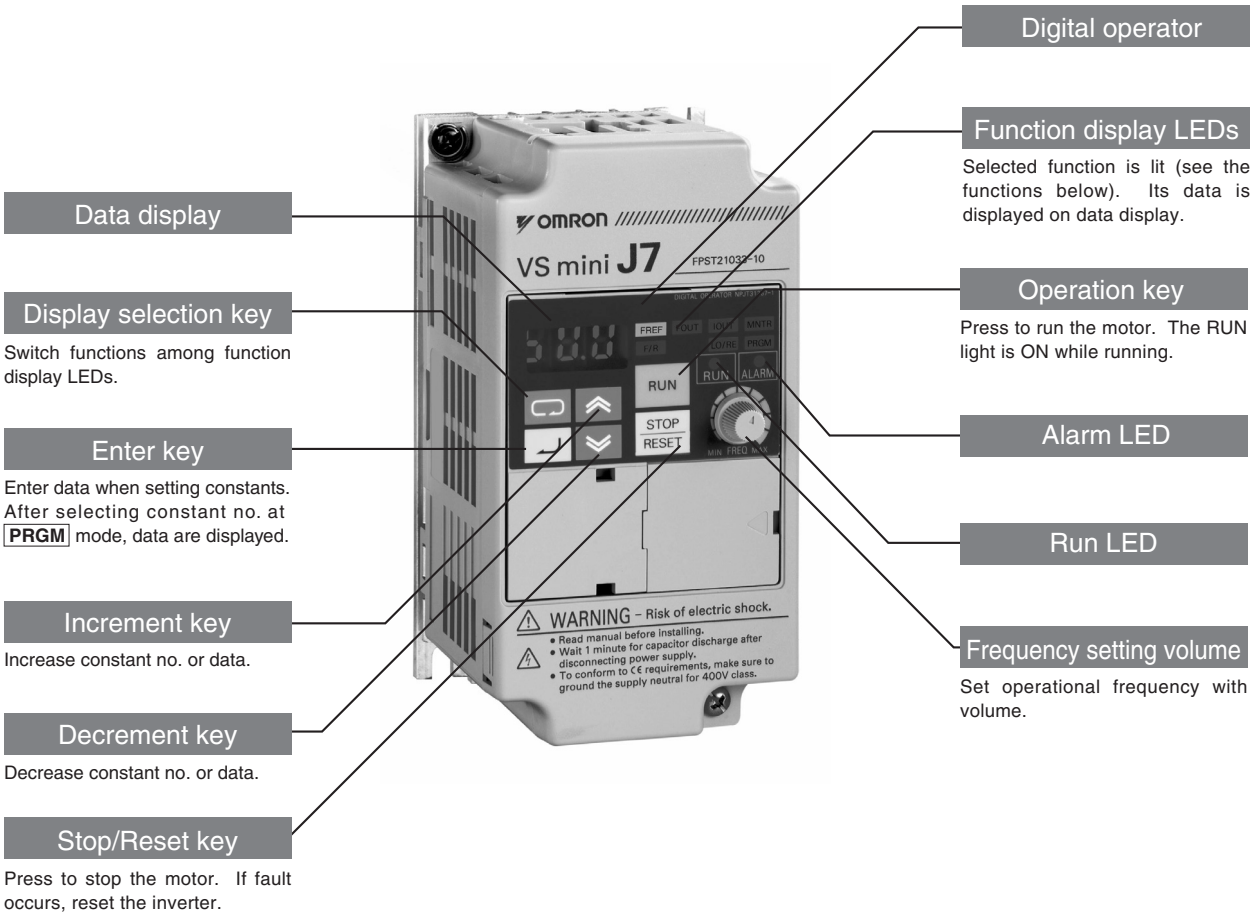

Note 1. The front cover functions as a terminal cover. The Digital Operator Unit cannot be removed.

2. Instead of mounting holes, each of the following models has two U-shaped cutouts located diagonally.
CIMR-J7AZ20P1 (0.1 kW),
CIMR-J7AZ20P2 (0.25 kW),
CIMR-J7AZ20P4 (0.55 kW), and
CIMR-J7AZ20P7 (1.1 kW)
CIMR-J7AZB0P1 (0.1 kW),
CIMR-J7AZB0P2 (0.25 kW), and
CIMR-J7AZB0P4 (0.55 kW)

Digital Operator

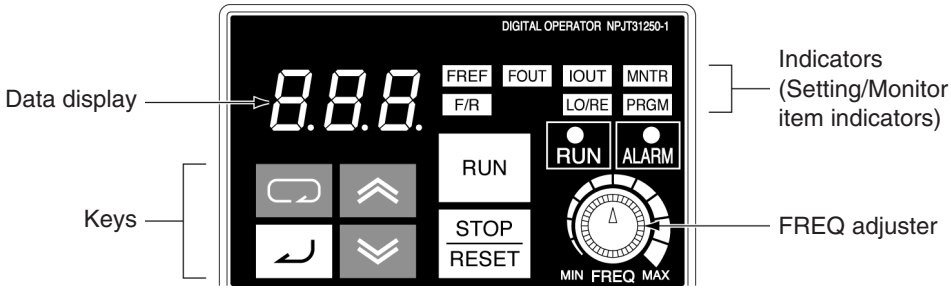

Appearance	Name	Function
8.8.8.	Data display	Displays relevant data items, such as frequency reference, output frequency, and parameter set values.
MIN MAX FREQUENCY	FREQ adjuster	Sets the frequency reference within a range between 0 Hz and the maximum frequency.
FREF	FREF indicator	The frequency reference can be monitored or set while this indicator is lit.
FOUT	FOUT indicator	The output frequency of the Inverter can be monitored while this indicator is lit.
IOUT	IOUT indicator	The output current of the Inverter can be monitored while this indicator is lit.
MNTR	MNTR indicator	The values set in U01 through U10 are monitored while this indicator is lit.
F/R	F/R indicator	The direction of rotation can be selected while this indicator is lit when operating the Inverter with the RUN Key.
LO/RE	LO/RE indicator	The operation of the Inverter through the Digital Operator or according to the set parameters is selectable while this indicator is lit. **Note** This status of this indicator can be only monitored while the Inverter is in operation. Any RUN command input is ignored while this indicator is lit.
PRGM	PRGM indicator	The parameters in n01 through n79 can be set or monitored while this indicator is lit. **Note** While the Inverter is in operation, the parameters can be only monitored and only some parameters can be changed. Any RUN command input is ignored while this indicator is lit.
	Mode Key	Switches the setting and monitor item indicators in sequence. Parameter being set will be canceled if this key is pressed before entering the setting.
	Increment Key	Increases multi-function monitor numbers, parameter numbers, and parameter set values.
	Decrement Key	Decreases multi-function monitor numbers, parameter numbers, and parameter set values.
	Enter Key	Enters multi-function monitor numbers, parameter numbers, and internal data values after they are set or changed.
RUN	RUN Key	Starts the Inverter running when the J7AZ is in operation with the Digital Operator.
STOP RESET	STOP/RESET Key	Stops the Inverter unless parameter n06 is set to disable the STOP Key. Functions as a Reset Key when an Inverter error occurs. (See note.)

Note For safety reasons, the reset will not work while a RUN command (forward or reverse) is in effect. Wait until the RUN command is OFF before resetting the Inverter.

CHAPTER 2
Design

2-1 Installation 6
2-1-1 Dimensions 6
2-1-2 Installations Conditions. 8
2-2 Wiring 10
2-2-1 Removing and Mounting the Covers 11
2-2-2 Terminal Block 12
2-2-3 Standard Connections 16
2-2-4 Wiring around the Main Circuit 17
2-2-5 Wiring Control Circuit Terminals 27
2-2-6 Conforming to EC Directive 29

2-1 Installation

2-1-1 Dimensions

CIMR-J7AZ20P1 to CIMR-J7AZ20P7 (0.1 to 0.75 kW) 3-phase 200-V AC Input

CIMR-J7AZB0P1 to CIMR-J7AZB0P4 (0.1 to 0.4 kW) Single-phase 200-V AC Input

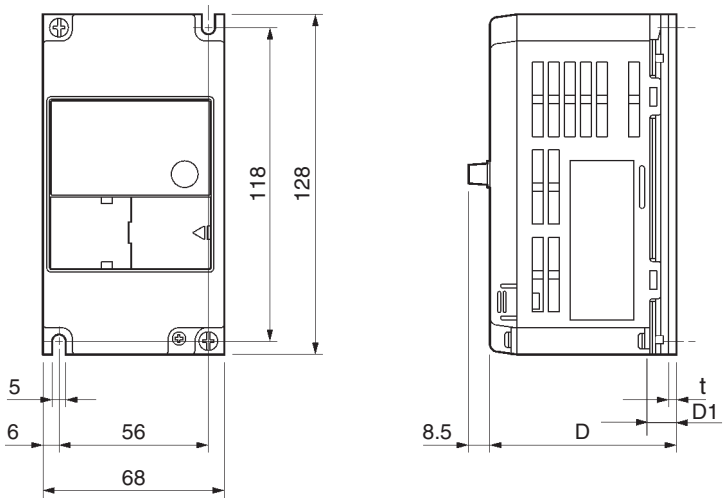

Rated voltage	Model CIMR-J7AZ-	Dimensions (mm)			Weight (kg)
		D	D1	t	
3-phase 200 V AC	20P1	70	10	3	Approx. 0.5
	20P2	70	10	3	Approx. 0.5
	20P4	102	42	5	Approx. 0.8
	20P7	122	62	5	Approx. 0.9
Single-phase 200 V AC	B0P1	70	10	3	Approx. 0.5
	B0P2	70	10	3	Approx. 0.5
	B0P4	112	42	5	Approx. 0.9

CIMR-J7AZ21P5 to CIMR-J7AZ22P2 (1.5 to 2.2 kW) 3-phase 200-V AC Input

CIMR-J7AZB0P7 to CIMR-J7AZB1P5 (0.75 to 1.5 kW) Single-phase 200-V AC Input

CIMR-J7AZ40P2 to CIMR-J7AZ42P2 (0.2 to 2.2 kW) 3-phase 400-V AC Input

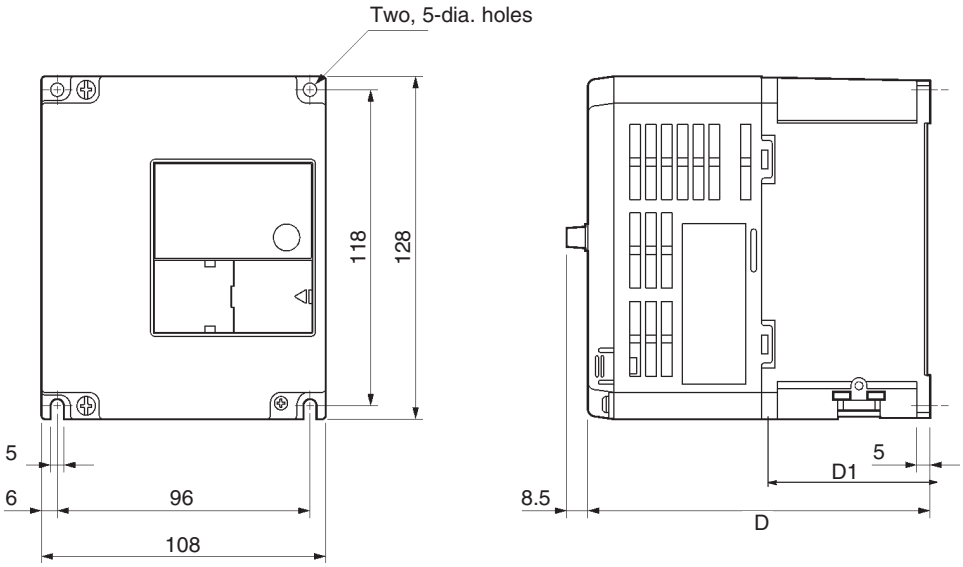

Rated voltage	Model CIMR-J7AZ-	Dimensions (mm)		Weight (kg)
		D	D1	
3-phase 200 V AC	21P5	129	64	Approx. 1.3
	22P5	154	64	Approx. 1.5
Single-phase 200 V AC	B0P7	129	64	Approx. 1.5
	B1P5	154	64	Approx. 1.5
3-phase 400 V AC	40P2	81	16	Approx. 1.0
	40P4	99	34	Approx. 1.1
	40P7	129	64	Approx. 1.5
	41P5	154	64	Approx. 1.5
	42P2	154	64	Approx. 1.5

CIMR-J7AZ24P0 (4.0 kW) 3-phase 200-V AC Input

CIMR-J7AZ44P0 (4.0 kW) 3-phase 400-V AC Input

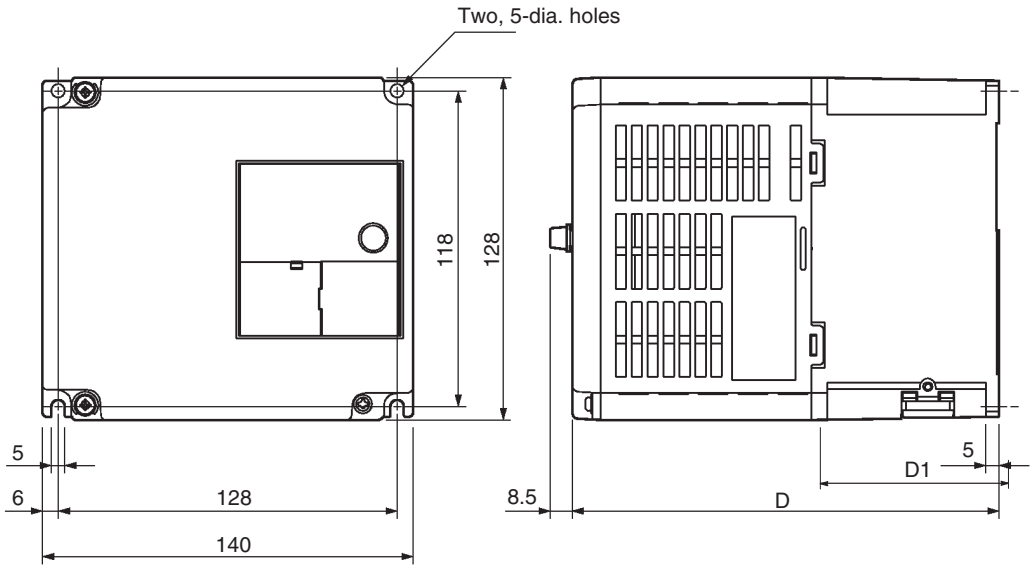

Rated voltage	Model CIMR-J7AZ-	Dimensions (mm)		Weight (kg)
		D	D1	
3-phase 200 V AC	24P0	161	71	Approx. 2.1
3-phase 400 V AC	44P0	161	71	Approx. 2.1

2-1-2 Installations Conditions

⚠ WARNING Provide an appropriate stopping device on the machine side to secure safety. (A holding brake is not a stopping device for securing safety.) Not doing so may result in injury.

⚠ WARNING Provide an external emergency stopping device that allows an instantaneous stop of operation and power interruption. Not doing so may result in injury.

⚠ Caution Be sure to install the product in the correct direction and provide specified clearances between the Inverter and control panel or with other devices. Not doing so may result in fire or malfunction.

⚠ Caution Do not allow foreign objects to enter inside the product. Doing so may result in fire or malfunction.

⚠ Caution Do not apply any strong impact. Doing so may result in damage to the product or malfunction.

Installation Direction and Dimensions

Install the Inverter under the following conditions.

- Ambient temperature for operation (panel-mounting): -10°C to 50°C
- Humidity: 95% or less (no condensation)

Install the Inverter in a clean location free from oil mist and dust. Alternatively, install it in a totally enclosed panel that is completely protected from floating dust.

When installing or operating the Inverter, always take special care so that metal powder, oil, water, or other foreign matter does not get into the Inverter.

Do not install the Inverter on inflammable material such as wood.

Direction

Install the Inverter on a vertical surface so that the characters on the nameplate are oriented upward.

Dimensions

When installing the Inverter, always provide the following clearances to allow normal heat dissipation from the Inverter.

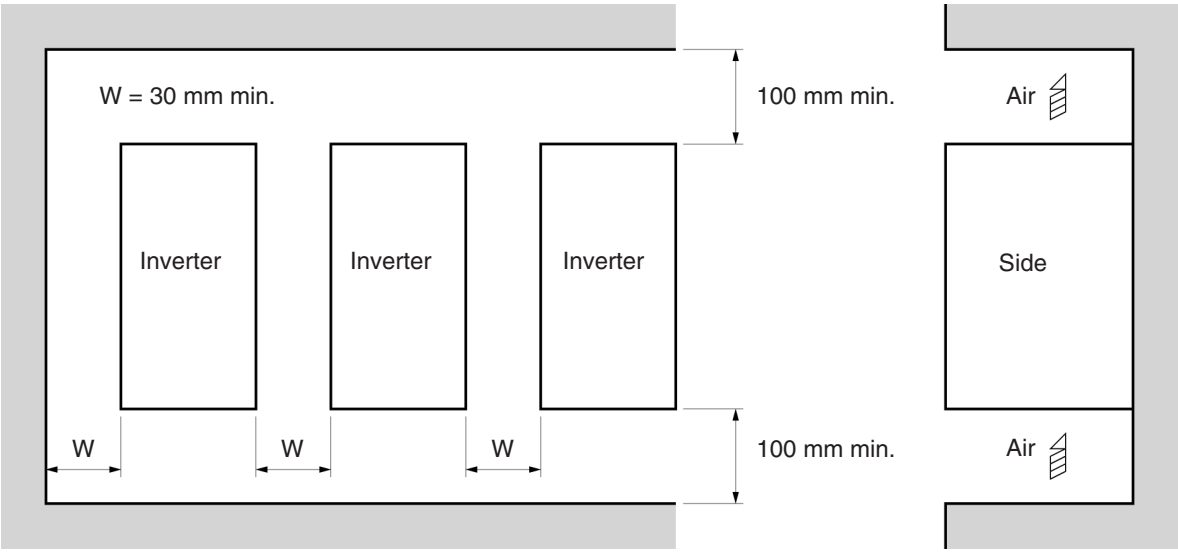

Ambient Temperature Control

To enhance operation reliability, the Inverter should be installed in an environment free from extreme temperature changes.

If the Inverter is installed in an enclosed environment such as a box, use a cooling fan or air conditioner to maintain the internal air temperature below 50°C. The life of the built-in electrolytic capacitors of the Inverter is prolonged by maintaining the internal air temperature as low as possible.

The surface temperature of the Inverter may rise approximately 30°C higher than the ambient temperature. Be sure to keep away equipment and wires from the Inverter as far as possible if the equipment and wires are easily influenced by heat.

Protecting Inverter from Foreign Matter during Installation

Place a cover over the Inverter during installation to shield it from metal power produced by drilling. Upon completion of installation, always remove the cover from the Inverter. Otherwise, ventilation will be affected, causing the Inverter to overheat.

2-2 Wiring

⚠ WARNING Wiring must be performed only after confirming that the power supply has been turned OFF. Not doing so may result in electrical shock.

⚠ WARNING Wiring must be performed by authorized personnel. Not doing so may result in electrical shock or fire.

⚠ WARNING Be sure to confirm operation only after wiring the emergency stop circuit. Not doing so may result in injury.

⚠ WARNING Always connect the ground terminals to a ground of 100 Ω or less for the 200V AC class, or 10 Ω or less for the 400V AC class. Not connecting to a proper ground may result in electrical shock.

⚠ Caution Install external breakers and take other safety measures against short-circuiting in external wiring. Not doing so may result in fire.

⚠ Caution Confirm that the rated input voltage of the Inverter is the same as the AC power supply voltage. An incorrect power supply may result in fire, injury, or malfunction.

⚠ Caution Connect the Braking Resistor and Braking Resistor Unit as specified in the manual. Not doing so may result in fire.

⚠ Caution Be sure to wire correctly and securely. Not doing so may result in injury or damage to the product.

⚠ Caution Be sure to firmly tighten the screws on the terminal block. Not doing so may result in fire, injury, or damage to the product.

⚠ Caution Do not connect an AC power to the U, V, or W output. Doing so may result in damage to the product or malfunction.

2-2-1 Removing and Mounting the Covers

It is necessary to remove the front cover, optional cover, top protection cover, and thebottom protection cover from the Inverter to wire the terminal block. Follow the instructions below to remove the covers from the Inverter. To mount the covers, take the opposite steps.

Removing the Front Cover

- Loosen the front cover mounting screws with a screwdriver.
- Press the left and right sides of the front cover in the arrow 1 directions and lift the bottom of the cover in the arrow 2 direction to remove the front cover as shown in the following illustration.

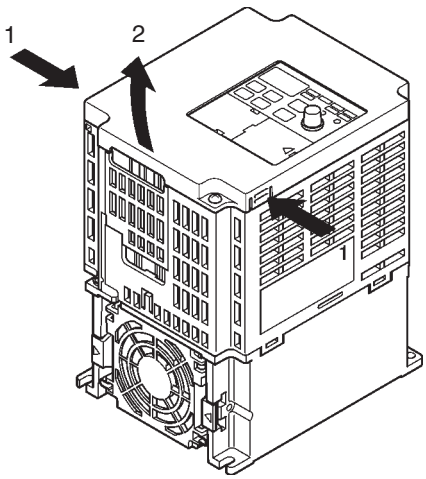

Removing the Top and Bottom Protection Covers and Optional Cover

Removing the Top and Bottom Protection Covers

- After removing the front cover, pull the top and bottom protection covers in the arrow 1 directions.

Removing the Optional Cover

- After removing the front cover, lift the optional cover in the arrow 2 direction based on position A as a fulcrum.

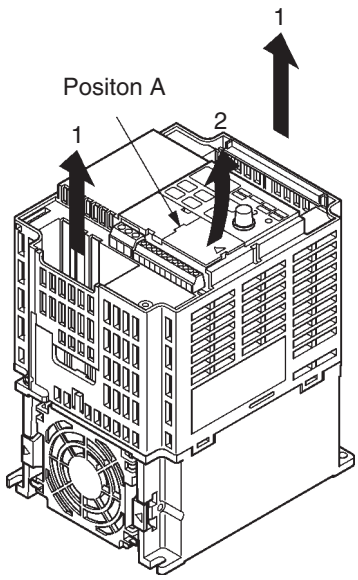

2-2-2 Terminal Block

Before wiring the terminal block, be sure to remove the front cover, top protection cover, and the bottom protection cover.

Position of Terminal Block

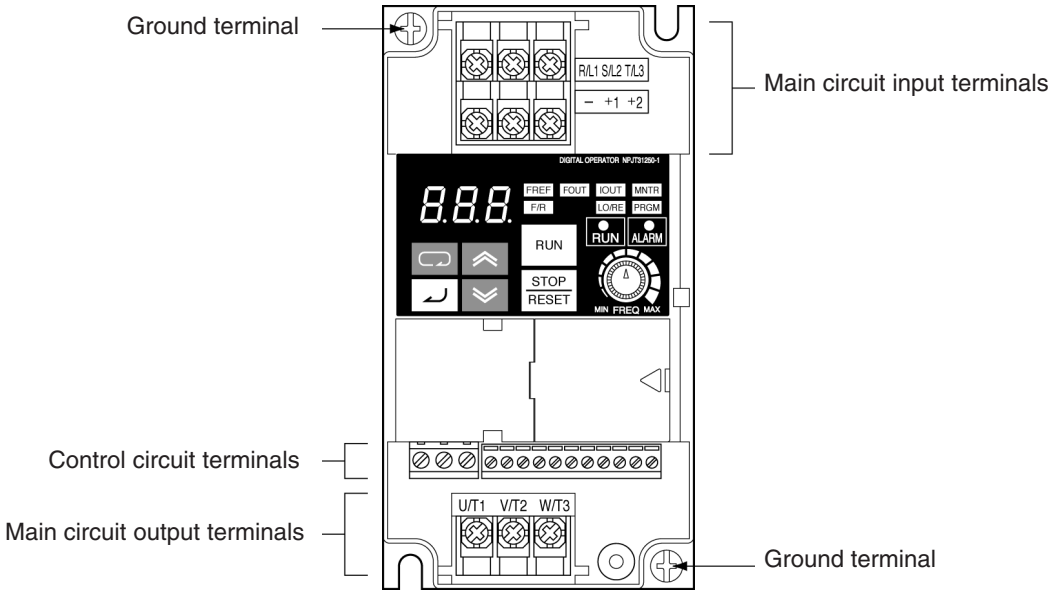

Arrangement of Control Circuit Terminals

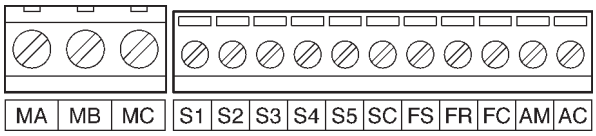

Arrangement of Main Circuit Terminals

- CIMR-J7AZ20P1 to CIMR-J7AZ20P7
  CIMR-J7AZB0P1 to CIMR-J7AZB0P4
- CIMR-J7AZ21P5 to CIMR-J7AZ24P0
  CIMR-J7AZB0P7 to CIMR-J7AZB4P0
  CIMR-J7AZ40P2 to CIMR-J7AZ44P0

Main Circuit Input Terminals (Upper Side)

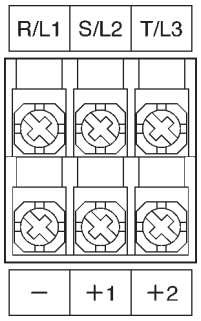

Main Circuit Input Terminals (Upper Side)

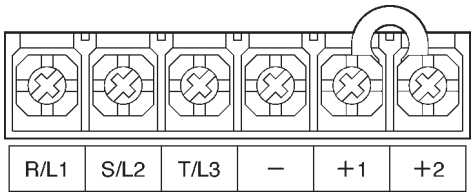

Main Circuit Output Terminals (Lower Side)

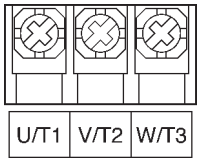

Main Circuit Output Terminals (Lower Side)

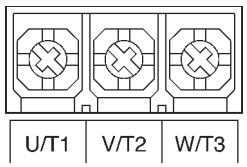

Main Circuit Terminals

Symbol	Name	Description
R/L1 S/L2 T/L3	Power Supply input terminals	CIMR-J7AZ2□: 3-phase 200 to 230 V AC CIMR-J7AZB□: Single-phase 200 to 240 V AC CIMR-J7AZ4□: 3-phase 380 to 460 V AC **Note** Connect single-phase input to terminals R/L1 and S/L2.
U/T1 V/T2 W/T3	Motor output terminals	3-phase power supply output for driving motors. CIMR-J7AZ2□: 3-phase 200 to 230 V AC CIMR-J7AZB□: 3-phase 200 to 240 V AC CIMR-J7AZ4□: 3-phase 380 to 460 V AC
+1 +2 –	Connection terminals +1 and +2: DC reactor connection terminals +1 and –: DC power supply input terminals	Connect the DC reactor for suppressing harmonics to terminals +1 and +2. When driving the Inverter with DC power, input the DC power to terminals +1 and –. (Terminal +1 is a positive terminal.)
⏚	Ground terminal	Be sure to ground the terminal under the following conditions. CIMR-J7AZ2□: Ground at a resistance of 100 Ω or less. CIMR-J7AZB□: Ground at a resistance of 100 Ω or less. CIMR-J7AZ4□: Ground at a resistance of 10 Ω or less, and connect to the power supply's neutral phase to conform to EC Directives. **Note** Be sure to connect the ground terminal directly to the motor frame ground.

Note The maximum output voltage corresponds to the power supply input voltage of the Inverter.

Control Circuit Terminals

Symbol		Name	Function	Signal level
Input	S1	Forward/Stop	Forward at ON. Stops at OFF.	Photocoupler 8 mA at 24 V DC **Note** NPN is the default setting for theses terminals. Wire them by providing a common ground. No external power supply is required. To provide an external power supply and wire the terminals through a common positive line, however, set the SW7 to PNP and make sure that the power supply is at 24 V DC ±10%.
	S2	Multi-function input 1 (S2)	Set by parameter n36 (Reverse/Stop)	
	S3	Multi-function input 2 (S3)	Set by parameter n37 (Fault reset)	
	S4	Multi-function input 3 (S4)	Set by parameter n38 (External fault:Normally open)	
	S5	Multi-function input 4 (S5)	Set by paramter n39 (Multi-step reference 1)	
	SC	Sequence input common	Common for S1 through S5	
	FS	Frequency reference power supply	DC power supply for frequency reference use	20 mA at 12 V DC
	FR	Frequency reference input	Input terminal for frequency reference use	0 to 10 V DC (input impedance: 20 kΩ)
	FC	Frequency reference common	Common for frequency reference use	
Output	MA	Multi-function contact output (Normally open)	Set by parameter n40 (during running)	Relay output 1 A max. at 30 V DC 1 A max. at 250 V AC
	MB	Multi-function contact output (Normally closed)		
	MC	Multi-function contact output common	Common for MA and MB use	
	AM	Analog monitor output	Set by parameter n44 (Output frequency)	2 mA max. at 0 to 10 V DC
	AC	Analog monitor output common	Common for AM use	

Note
1. Depending on the parameter settings, various functions can be selected for multi-function inputs and multi-function contacts outputs.
2. Functions in parentheses are default settings.

Selecting Input Method

Switches SW7 and SW8, both of which are located above the control circuit terminals, are used for input method selection.Remove the front cover and optional cover to use these switches.

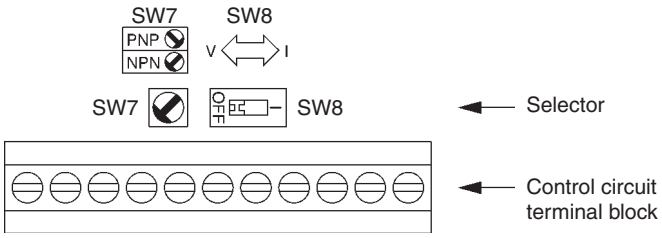

Selecting Frequency Reference Input Method

By using SW7, NPN or PNP input can be selected as shown below.

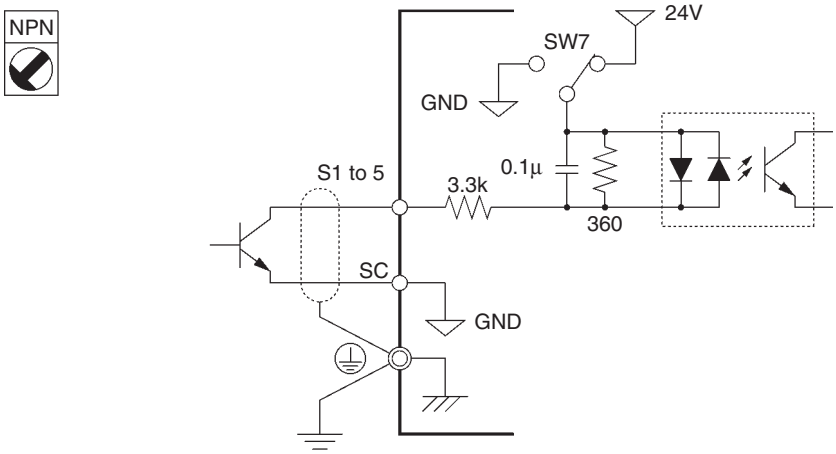

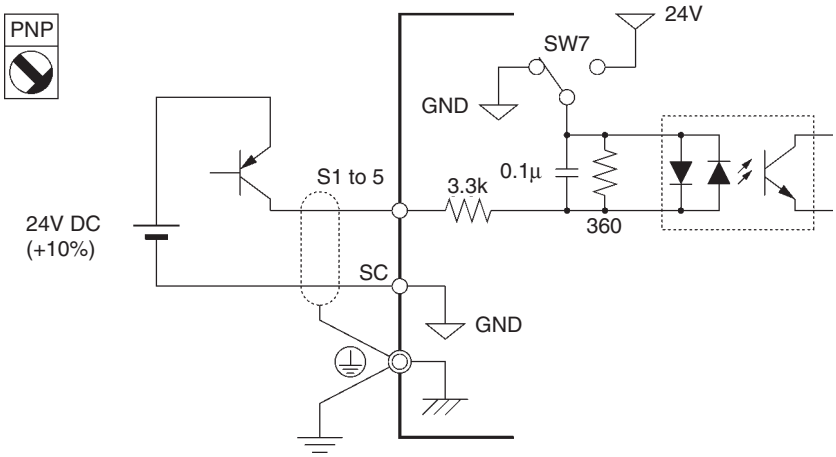

Selecting Frequency Reference Input Method

By using SW8, frequency reference voltage or current input can be selected. Parameter settings are required together with the selection of the frequency reference input method.

Frequency reference input method	SW8 setting	Frequency reference selection (parameter n03)
Voltage input	V (OFF)	Set value 2
Current input	I (ON)	Set value 3 or 4

2-2-3 Standard Connections

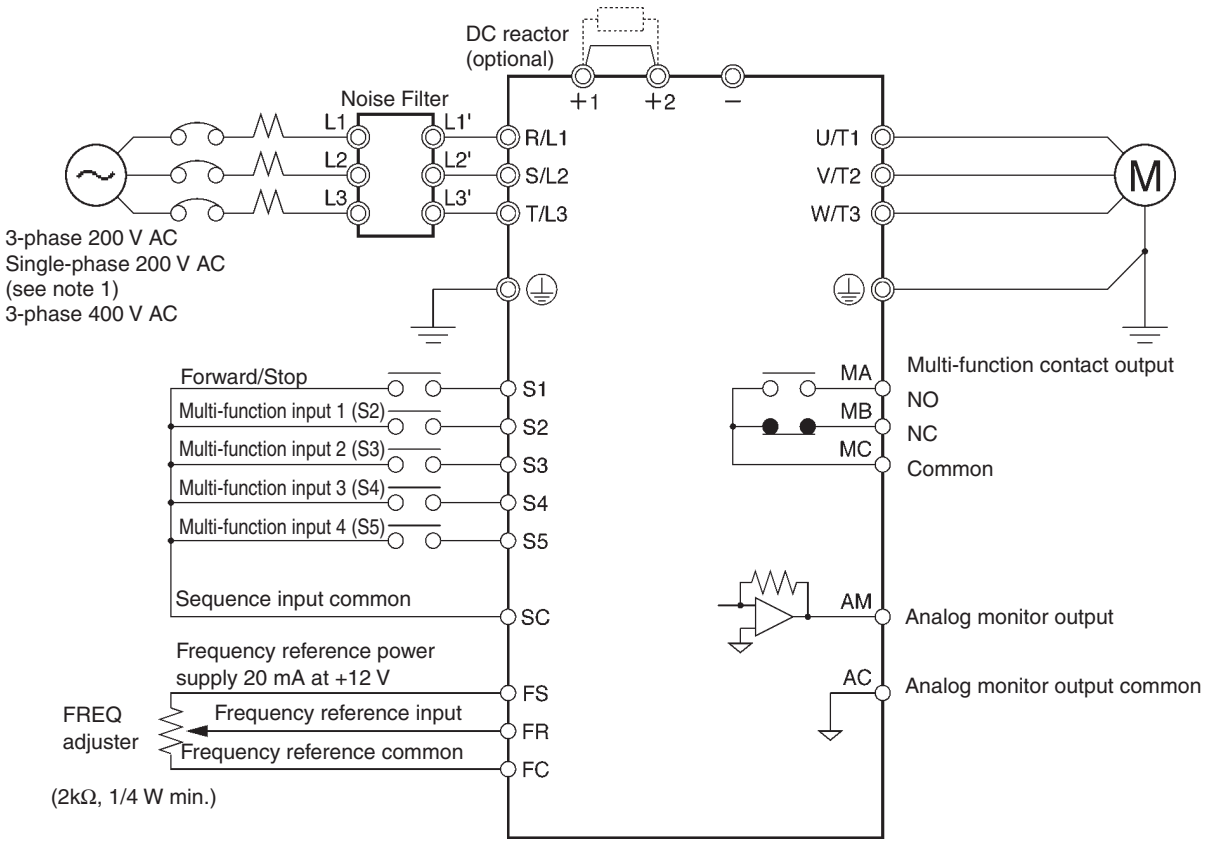

Note 1. Connect single-phase 200 V AC to terminals R/L1 and S/L2 of the CIMR-J7AZB□.

2. The braking resistor cannot be connected because no braking transistor is incorporated.

Example of 3-wire Sequence Connections

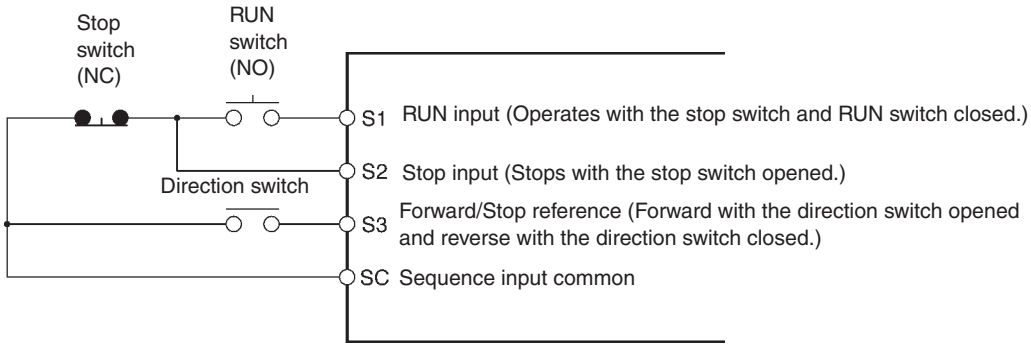

Note Set parameter n37 for 3-wire sequence input.

2-2-4 Wiring around the Main Circuit

Wire Size, Terminal Screw, Screw Tightening Torque, and Molded-case Circuit Breaker Capacities

For the main circuit and ground, always use 600-V polyvinyl chloride (PVC) cables.

If any cable is long and may cause voltage drops, increase the wire size according to the cable length.

3-phase 200-V AC Model

Model CIMR-J7AZ-	Terminal symbol	Terminal screw	Screw tightening torque (N•m)	Wire size (mm^2)	Re-commended wire size (mm^2)	Molded-case circuit breaker capacity (A)
20P1	R/L1, S/L2, T/L3, –, +1, +2, U/T1, V/T2, W/T3	M3.5	0.8 to 1.0	0.75 to 2	2	5
	⏚					
20P2	R/L1, S/L2, T/L3, –, +1, +2, U/T1, V/T2, W/T3	M3.5	0.8 to 1.0	0.75 to 2	2	5
	⏚					
20P4	R/L1, S/L2, T/L3, –, +1, +2, U/T1, V/T2, W/T3	M3.5	0.8 to 1.0	0.75 to 2	2	5
	⏚					
20P7	R/L1, S/L2, T/L3, –, +1, +2, U/T1, V/T2, W/T3	M3.5	0.8 to 1.0	0.75 to 2	2	10
	⏚					
21P5	R/L1, S/L2, T/L3, –, +1, +2, U/T1, V/T2, W/T3	M3.5	0.8 to 1.0	2 to 5.5	2	20
	⏚					
22P2	R/L1, S/L2, T/L3, –, +1, +2, U/T1, V/T2, W/T3	M3.5	0.8 to 1.0	2 to 5.5	3.5	20
	⏚					
24P0	R/L1, S/L2, T/L3, –, +1, +2, U/T1, V/T2, W/T3	M4	1.2 to 1.5	2 to 5.5	5.5	30
	⏚					

Single-phase 200-V AC Model

Model CIMR-J7AZ-	Terminal symbol	Terminal screw	Terminal torque (N•m)	Wire size (mm^2)	Re-commended wire size (mm^2)	Circuit breaker capacity (A)
B0P1	R/L1, S/L2, T/L3, –, +1, +2, U/T1, V/T2, W/T3	M3.5	0.8 to 1.0	0.75 to 2	2	5
	⏚					
B0P2	R/L1, S/L2, T/L3, –, +1, +2, U/T1, V/T2, W/T3	M3.5	0.8 to 1.0	0.75 to 2	2	5
	⏚					
B0P4	R/L1, S/L2, T/L3, –, +1, +2, U/T1, V/T2, W/T3	M3.5	0.8 to 1.0	0.75 to 2	2	10
	⏚					
B0P7	R/L1, S/L2, T/L3, –, +1, +2, U/T1, V/T2, W/T3	M3.5	0.8 to 1.0	2 to 5.5	3.5	20
	⏚				2	
B1P5	R/L1, S/L2, T/L3, –, +1, +2, U/T1, V/T2, W/T3	M3.5	0.8 to 1.0	2 to 5.5	5.5	20
	⏚				2	

3-phase 400-V AC Model

Model CIMR-J7AZ-	Terminal symbol	Terminal screw	Terminal torque (N•m)	Wire size (mm^2)	Re-commended wire size (mm^2)	Circuit breaker capacity (A)
40P2	R/L1, S/L2, T/L3, –, +1, +2, U/T1, V/T2, W/T3	M3.5	0.8 to 1.0	2 to 5.5	2	5
	⏚					
40P4	R/L1, S/L2, T/L3, –, +1, +2, U/T1, V/T2, W/T3	M3.5	0.8 to 1.0	2 to 5.5	2	5
	⏚					
40P7	R/L1, S/L2, T/L3, –, +1, +2, U/T1, V/T2, W/T3	M3.5	0.8 to 1.0	2 to 5.5	2	5
	⏚					
41P5	R/L1, S/L2, T/L3, –, +1, +2, U/T1, V/T2, W/T3	M3.5	0.8 to 1.0	2 to 5.5	2	10
	⏚					
42P2	R/L1, S/L2, T/L3, –, +1, +2, U/T1, V/T2, W/T3	M4	1.2 to 5.5	2 to 5.5	2	10
	⏚					
44P0	R/L1, S/L2, T/L3, –, +1, +2, U/T1, V/T2, W/T3	M4	1.2 to 1.5	2 to 5.5	2	20
	⏚				3.5	

Wiring on the Input Side of the Main Circuit

Installing a Molded-case Circuit Breaker

Always connect the power input terminals (R/L1, S/L2, and T/L3) and power supply via a molded case circuit breaker (MCCB) suitable to the Inverter.

- Install one MCCB for every Inverter used.
- Choose an appropriate MCCB capacity according to the Circuit breaker capacity column in the table on the previous page.
- For the MCCB's time characteristics, be sure to consider the Inverter's overload protection (one minute at 150% of the rated output current).
- If the MCCB is to be used in common among multiple Inverters, or other devices, set up a sequence such that the power supply will be turned off by a fault output, as shown in the following diagram.

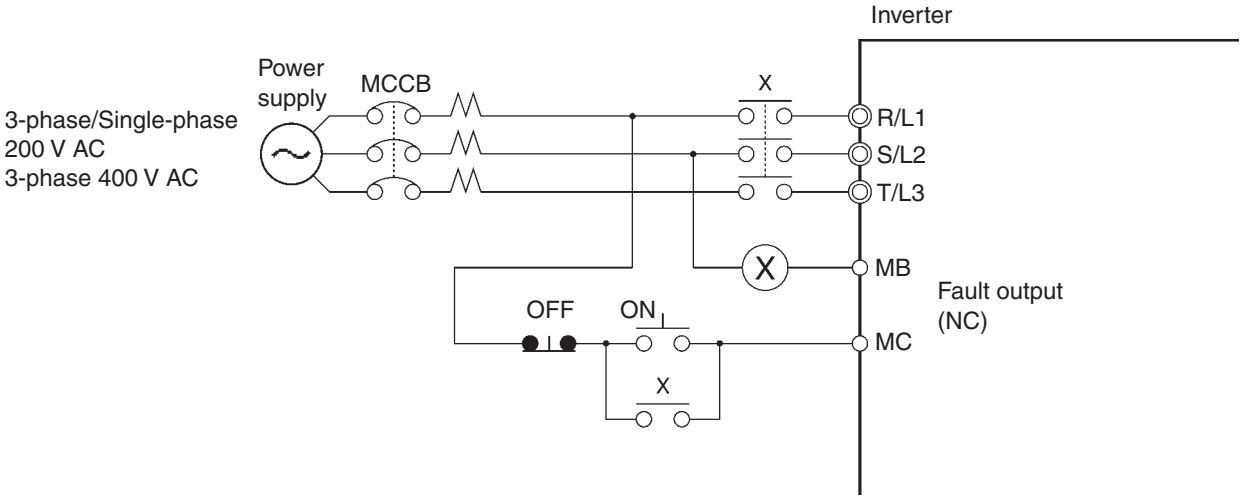

Installing a Ground Fault Interrupter

Inverter outputs use high-speed switching, so high-frequency leakage current is generated.

In general, a leakage current of approximately 100 mA will occur for each Inverter (when the power cable is 1 m) and approximately 5 mA for each additional meter of power cable.

Therefore, at the power supply input area, use a special-purpose breaker for Inverters, which detects only the leakage current in the frequency range that is hazardous to humans and excludes high-frequencyleakage current.

- For the special-purpose breaker for Inverters, choose a ground fault interrupter with a sensitivity amperage of at least 10 mA per Inverter.
- When using a general leakage breaker, choose a ground fault interrupter with a sensitivity amperage of 200 mA or more per Inverter and with an operating time of 0.1 s or more.

Installing a Magnetic Contactor

If the power supply of the main circuit is to be shut off because of the sequence, a magnetic contactor can be used instead of a molded-case circuit breaker.

When a magnetic contactor is installed on the primary side of the main circuit to stop a load forcibly, however, the regenerative braking does not work and the load coasts to a stop.

- A load can be started and stopped by opening and closing the magnetic contactor on the primary side. Frequently opening and closing the magnetic contactor, however, may cause the Inverter to break down. In order not to shorten the service life of the Inverter's internal relays and electrolytic capacitors, it is recommended that the magnetic contactor is used in this way no more than once every 30 minutes.
- When the Inverter is operated with the Digital Operator, automatic operation cannot be performed after recovery from a power interruption.

Connecting Input Power Supply to the Terminal Block

Input power supply can be connected to any terminal on the terminal block because the phase sequence of input power supply is irrelevant to the phase sequence (R/L1, S/L2, and R/L3).

Installing an AC Reactor

If the Inverter is connected to a large-capacity power transformer (660 kW or more) or the phase advance capacitor is switched, an excessive peak current may flow through the input power circuit, causing the converter unit to break down.

To prevent this, install an optional AC reactor on the input side of the Inverter.

This also improves the power factor on the power supply side.

Installing a Surge Absorber

Always use a surge absorber or diode for the inductive loads near the Inverter. These inductive loadsinclude magnetic contactors, electromagnetic relays, solenoid valves, solenoid, and magnetic brakes.

Installing a Noise Filter on the Power Supply Side

The Inverter's outputs uses high-speed switching, so noise may be transmitted from the Inverter to the power line and adversely effect other devices in the vicinity. It is recommended that a Noise Filter be installed at the Power Supply to minimize noise transmission. Noise will also be reduced from the power line to the Inverter.

Wiring Example 1

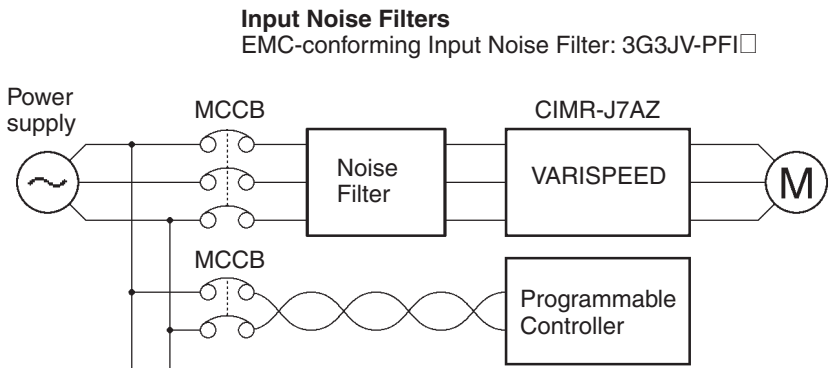

Note Use a Noise Filter designed for the Inverter. A general-purpose Noise Filter will be less effective and may not reduce noise.

Wiring on the Output Side of the Main Circuit

Connecting the Terminal Block to the Load

Connect output terminals U/T1, V/T2, and W/T3 to motor lead wires U, V, and W.

Check that the motor rotates forward with the forward command. Switch over any two of the output terminals to each other and reconnect if the motor rotates in reverse with the forward command.

Never Connect a Power Supply to Output Terminals

Never connect a power supply to output terminals U/T1, V/T2, or W/T3.

If voltage is applied to the output terminals, the internal circuit of the Inverter will be damaged.

Never Short or Ground Output Terminals

If the output terminals are touched with bare hands or the output wires come into contact with the Inverter casing, an electric shock or grounding will occur. This is extremely hazardous.

Also, be careful not to short the output wires.

Do not Use a Phase Advancing Capacitor or Noise Filter

Never connect a phase advance capacitor or LC/RC Noise Filter to the output circuit.

Doing so will result in damage to the Inverter or cause other parts to burn.

Do not Use an Electromagnetic Switch of Magnetic Contactor

Do not connect an electromagnetic switch of magnetic contactor to the output circuit.

If a load is connected to the Inverter during running, an inrush current will actuate the overcurrent protective circuit in the Inverter.

Installing a Thermal Relay

The Inverter has an electronic thermal protection function to protect the motor from overheating. If, however, more than one motor is operated with one inverter or a multi-polar motor is used, always install a thermal relay (THR) between the Inverter and the motor and set n33 to 2 (no thermal protection).

In this case, program the sequence so that the magnetic contactor on the input side of the main circuit is turned off by the contact of the thermal relay.

Installing a Noise Filter on the Output Side

Connect a Noise Filter to the output side of the Inverter to reduce radio noise and induction noise.

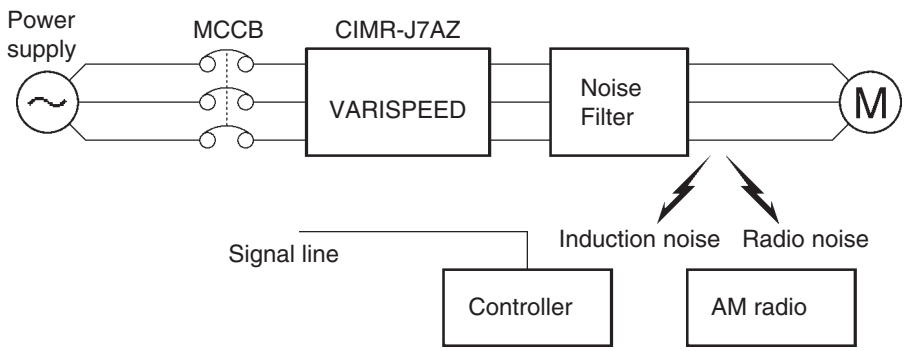

Induction Noise: Electromagnetic induction generates noise on the signal line, causing the controller to malfunction.

Radio Noise: Electromagnetic waves from the Inverter and cables cause the broadcasting radio receiver to make noise.

Countermeasures against Induction Noise

As described previously, a Noise Filter can be used to prevent induction noise from being generated on the output side. Alternatively, cables can be routed through a grounded metal pipe to prevent induction noise. Keeping the metal pipe at least 30 cm away from the signal line considerably reduces induction noise.

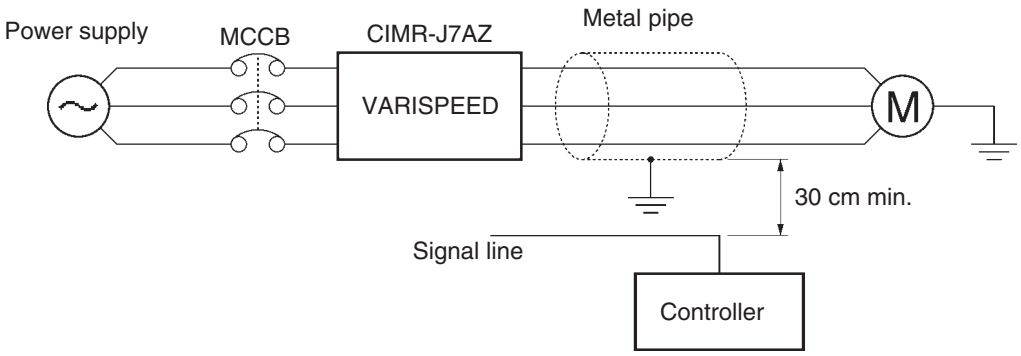

Countermeasures against Radio Interference

Radio noise is generated from the Inverter as well as the input and output lines. To reduce radio noise, install Noise Filters on both input and output sides, and also install the Inverter in a totally enclosed steel box.

The cable between the Inverter and the motor should be as short as possible.

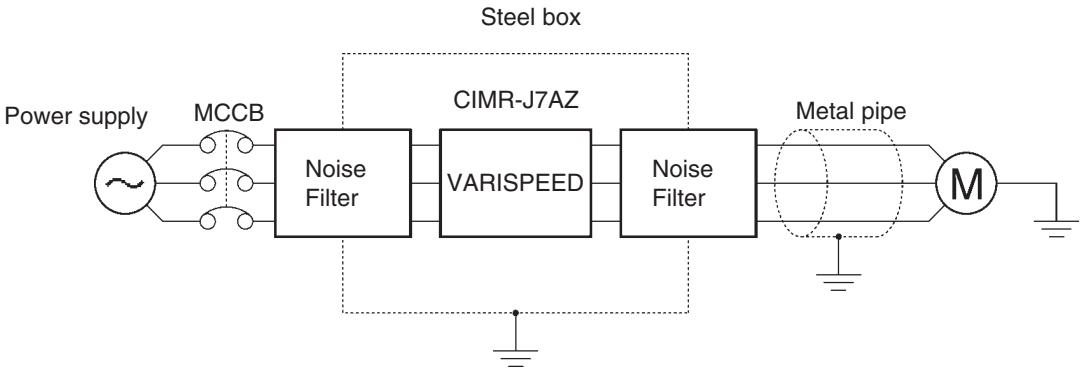

Cable Length between Inverter and Motor

As the cable length between the Inverter and the motor is increased, the floating capacity between the Inverter outputs and the ground is increased proportionally. The increase in floating capacity at the Inverter outputs causes the high-frequency leakage current to increase, and this may adversely affect peripheral devices and the current detector in the Inverter's output section. To prevent this from occurring, use a cable of no more than 100 meters between the Inverter and the motor. If the cable must be longer than 100 meters, take measures to reduce the floating capacity by not wiring in metallic ducts, by using separate cables for each phase, etc.

Also, adjust the carrier frequency (set in n46) according to the cable length between the Inverter and the motor, as shown in the following table.

Cable length	50 m or less	100 m or less	More than 100 m
Carrier frequency	10 kHz max.	5 kHz max.	2.5 kHz

Note

Single-phase motors cannot be used.
The Inverter is not suited for the variable speed control of single-phase motors.
The rotation direction of a single-phase motor is determined by the capacitor starting method or phase-splitting starting method to be applied when starting the motor.
In the capacitor starting method, however, the capacitor may be damaged by a sudden electric discharge of the capacitor caused by the output of the Inverter. On the other hand, the starting coil may burn in the phase-splitting starting method because the centrifugal switch does not operate.

Ground Wiring

- Always use the ground terminal with the following ground resistance:
  200-V Inverter: 100 W or less
  400-V Inverter: separate ground,10 W or less
- Do not share the ground wire with other devices such as welding machines or power tools.
- Always use a ground wire that complies with technical standards on electrical equipment and minimize the length of the ground wire.
  Leakage current flows through the Inverter. Therefore, if the distance between the ground electrode and the ground terminal is too long, the potential on the ground terminal of the Inverter will become unstable.
- When using more than one Inverter, be careful not to loop the ground wire.

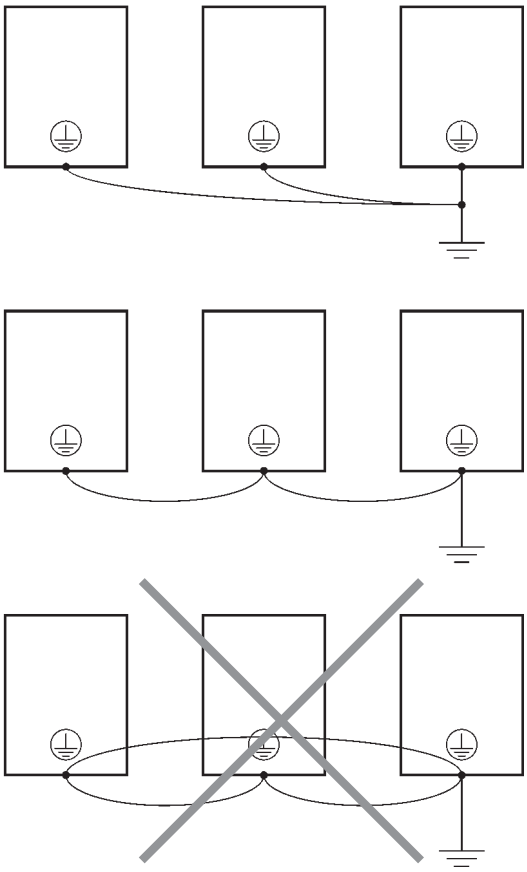

Harmonics

■ Definiton

Harmonics consist of electric power produced from AC power and alternating at frequencies that are integral multiples of the frequency of the AC power.

The following frequencies are harmonics of a 60- or 50-Hz commercial power supply.

Second harmonic: 120 (100) Hz

Third harmonic: 180 (150) Hz

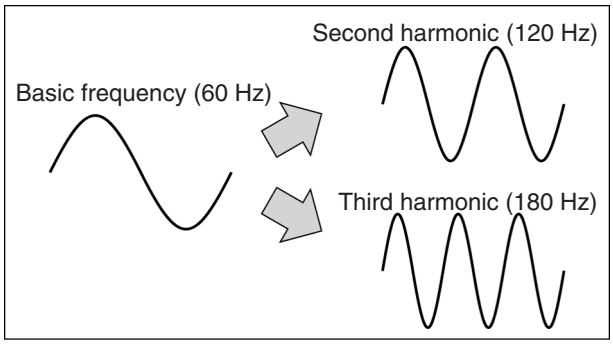

■ Problems Caused by Harmonics Generation

The waveform of the commercial power supply will be distorted if the commercial power supply contains excessive harmonics. Machines with such a commercial power supply will malfunction or generate excessive heat.

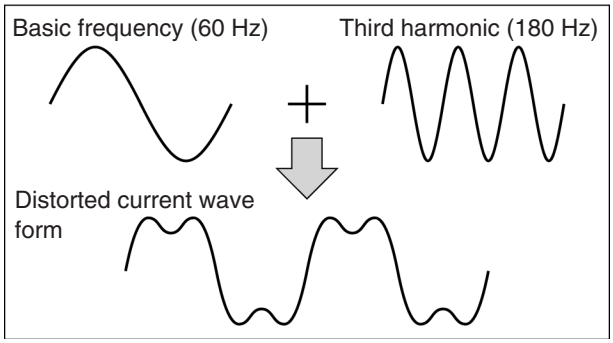

Causes of Harmonics Generation

Usually, electric machines have built-in circuitry that converts commercial AC power supply into DC power.

Such AC power, however, contains harmonics due to the difference in current flow between DC and AC.

Obtaining DC from AC Using Rectifiers and Capacitors

DC voltage is obtained by converting AC voltage into a pulsating one-side voltage with rectifiers and smoothing the pulsating one-side voltage with capacitors. Such AC current, however, contains harmonics.

Inverter

The Inverter as well as normal electric machines has an input current containing harmonics because the Inverter converts AC into DC. The output current of the Inverter is comparatively high. Therefore, the ratio of harmonics in the output current of the Inverter is higher than that of any other electric machine.

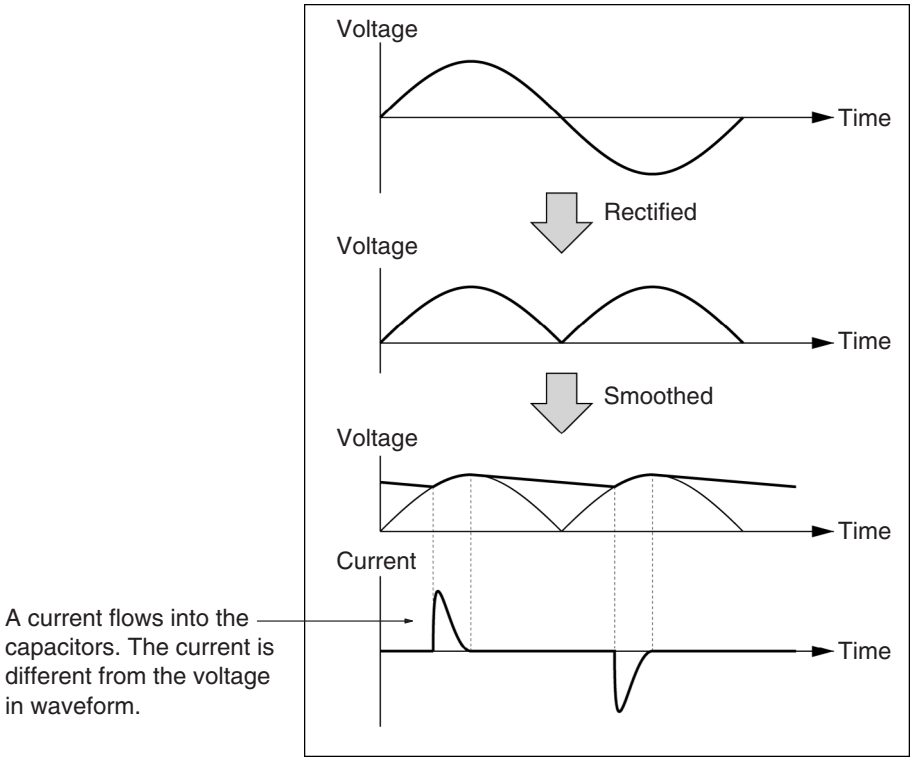

Countermeasures with Reactors against Harmonics Generation

DC/AC Reactors

The DC reactor and AC reactor suppress harmonics and currents that change suddenly and greatly.

The DC reactor suppresses harmonics better than the AC reactor. The DC reactor used with the AC reactor suppresses harmonics more effectively.

The input power factor of the Inverter is improved by suppressing the harmonics of the input current of the Inverter.

Connection

Connect the DC reactor to the internal DC power supply of the Inverter after shutting off the power supply to the Inverter and making sure that the charge indicator of the Inverter turns off.

Do not touch the internal circuitry of the Inverter in operation, otherwise an electric shock or burn injury may occur.

Wiring Method

With DC Reactor

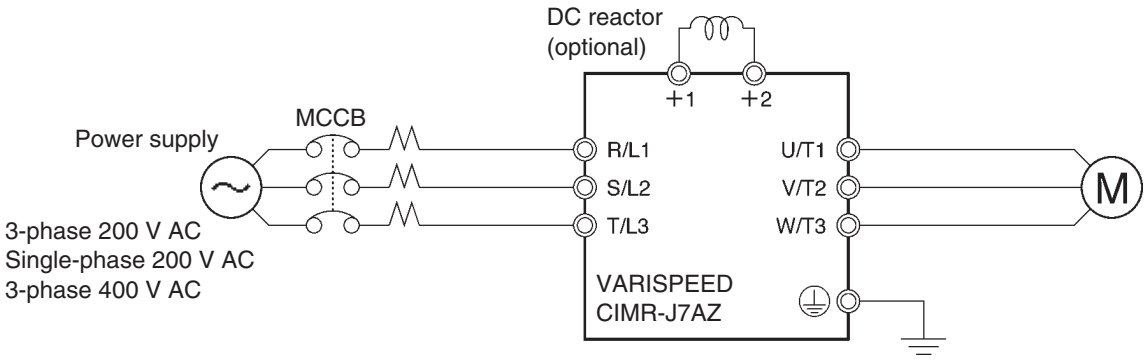

With DC and AC Reactors

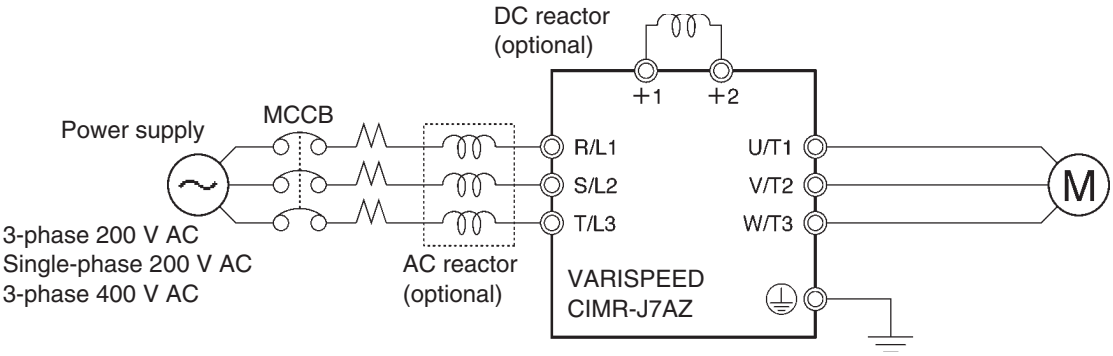

Reactor Effects

Harmonics are effectively suppressed when the DC reactor is used with the AC reactor as shown in the following table.

Harmonics suppression method	Harmonic generation rate (%)							
	5th harmonic	7th harmonic	11th harmonic	13th harmonic	17th harmonic	19th harmonic	23rd harmonic	25th harmonic
No reactor	65	41	8.5	7.7	4.3	3.1	2.6	1.8
AC reactor	38	14.5	7.4	3.4	3.2	1.9	1.7	1.3
DC reactor	30	13	8.4	5	4.7	3.2	3.0	2.2
DC and AC reactors	28	9.1	7.2	4.1	3.2	2.4	1.6	1.4

2-2-5 Wiring Control Circuit Terminals

A control signal line must be 50 m maximum and separated from power lines. The frequency reference must be input into the Inverter through shielded, twisted-pair wires.

Wiring of Control I/O Terminals

Wire each control I/O terminal under the following conditions.

Wires and Tightening Torque

Multi-function Contact Output (MA, MB, and MC)

Terminal screw size	Tightening torque N•m	Wire	Wire size	Recommended wire size	Cable
M3	0.5 to 0.6	Single wire	0.5 to 1.25 (20 to 16)	0.75 (18)	Cable with polyethylene sheath
		Standard wire	0.5 to 1.25 (20 to 16)		

Sequential Input (S1 through S5 and SC) and Analog Monitor Output (AM or AC)

Terminal screw size	Tightening torque N•m	Wire	Wire size	Recommended wire size	Cable
M2	0.22 to 0.25	Single wire	0.5 to 1.25 (20 to 16)	0.75 (18)	Cable with polyethylene sheath
		Standard wire	0.5 to 0.75 (20 to 18)		

Frequency Reference Input (FR, FS, and FC)

Terminal screw size	Tightening torque N•m	Wire	Wire size	Recommended wire size	Cable
M2	0.22 to 0.25	Single wire	0.5 to 1.25 (20 to 16)	0.75 (18)	Special cable with polyethylene sheath and shield for measure-ment use
		Standard wire	0.5 to 0.75 (20 to 18)		

Solderless Terminal Size

The use of solderless terminals for the control circuit terminals is recommended for the reliability and ease of connection.

Note Make sure that the wire size is 0.5 mm^2 when using the following solderless terminal.

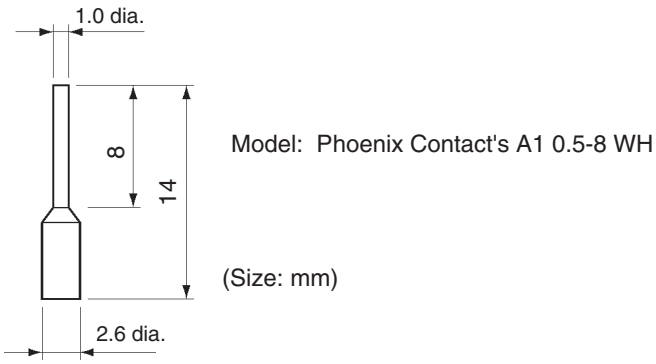

Wiring Method

1. Loosen the terminal screws with a thin-slotted screwdriver.
2. Insert the wires from underneath the terminal block.
3. Tighten each terminal screw firmly to a torque specified in the previous tables.

Note

1. Always separate the control signal line from the main circuit cables and other power cables.
2. Do not solder the wires to the control circuit terminals. The wires may not contact well with the control circuit terminals if the wires are soldered.
3. The end of each wire connected to the control circuit terminals must be stripped for approximately 5.5 mm.
4. Connect the shield wire to the ground terminal of the CIMR-J7AZ. Do not connect the shield wire to the device side being controlled.
5. Be sure to insulate the shield wire with tape so that the shield wire will not come into contact with other signal wires or equipment.

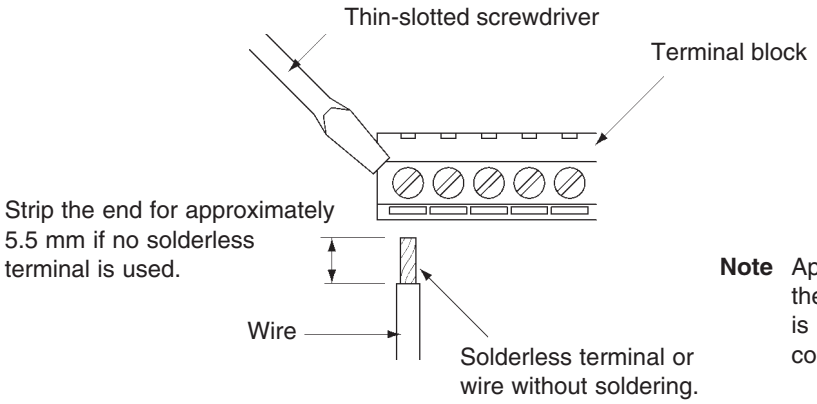

Note Applying excessive torque may damage the terminal block. If the tightening torque is insufficient, homever, wires may disconnect.

2-2-6 Conforming to EC Directive

The following description provides the wiring method of the Inverter to meet DC Directive requirements. If the following requirements are not satisfied, the whole equipment incorporating the Inverter will need further confirmation.

Standard Connection

Main Circuit Terminals

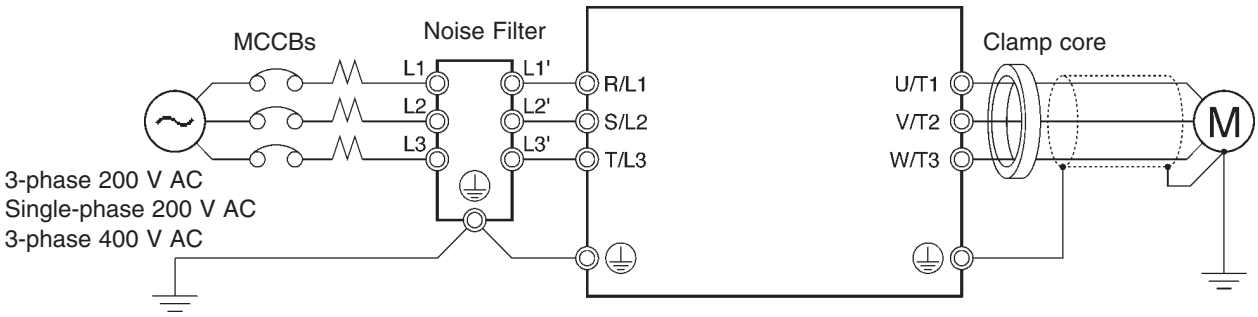

Control Circuit Terminals

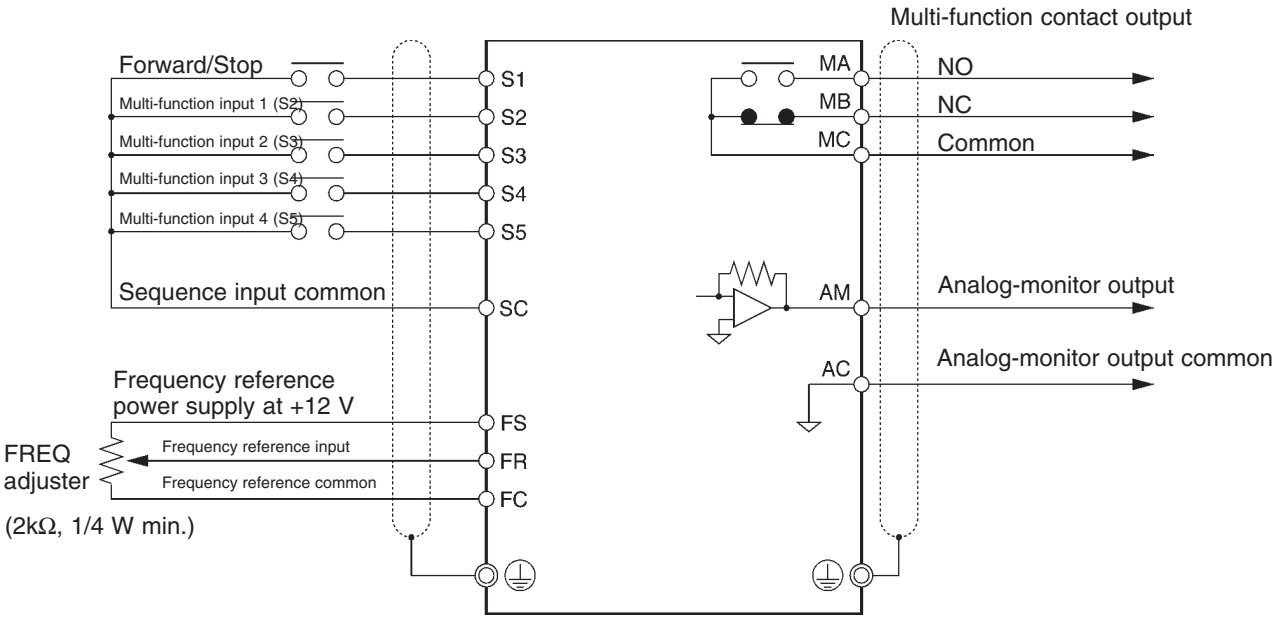

Note I/O signals can be connected to a single shielded cable.

Wiring the Power Supply

Make sure that the Inverter and Noise Filter are grounded together.

- Always connect the power input terminals (R/L1, S/L2, and T/L3) and power supply via a dedicated Noise Filter.
- Reduce the length of the ground wire as much as possible.
- Locate the Noise Filter as close as possible to the Inverter. Make sure that the cable length between the Noise Filter and the Inverter does not exceed 40 cm.
- The following Noise Filters are available.

3-phase 200-V AC Noise Filter

Inverter	3-phase 200-V AC Noise Filter		
Model CIMR-J7AZ-	Schaffner model	Rasmi model	Rated current (A)
20P1/20P2/20P4/20P7	3G3JV-PFI2010-SE	3G3JV-PFI2010-E	10
21P5/22P2	3G3JV-PFI2020-SE	3G3JV-PFI2020-E	16
24P0	---	3G3JV-PFI2030-E	26

Single-phase 200-V AC Noise Filter

Inverter	Single-phase 200-V Noise Filter		
Model 3G3JV-	Schaffner model	Rasmi model	Rated current (A)
B0P1/B0P2/B0P4	3G3JV-PFI1010-SE	3G3JV-PFI1010-E	10
B0P7/B1P5	3G3JV-PFI1020-SE	3G3JV-PFI1020-E	20

3-phase 400-V AC Noise Filter

Inverter	Single-phase 200-V Noise Filter			
Model CIMR-J7AZ-	Schaffner model	Rasmi model	Rated current (A)	
			Schaffner model	Rasmi model
40P2/40P4	3G3JV-PFI3005-SE	3G3JV-PFI3005-E	5	
40P7/41P5/44P0	3G3JV-PFI3010-SE	3G3JV-PFI3010-E	10	
A44P0	3G3JV-PFI3020-SE	3G3JV-PFI3020-E	20	15

Connecting a Motor to the Inverter

- When connecting a motor to the Inverter, be sure to use a cable with a braided shield.
- Reduce the length of the cable as short as possible and ground the shield on the Inverter side as well as the motor side. Make sure that the cable length between the Inverter and the motor does not exceed 20 cm. Furthermore, connect a clamp core (Clamp Filter) close to the output terminals of the Inverter.

Product	Model	Manufacturer
Clamp Filter	2CAT3035-1330	TDK

Wiring a Control Cable

- Be sure to connect a cable with a braided shield to the control circuit terminals.
- Ground the shield on the Inverter side only.

Grounding the Shield

In order to ground the shield securely, it is recommended that a cable clamp be directly connected to the ground plate as shown below.

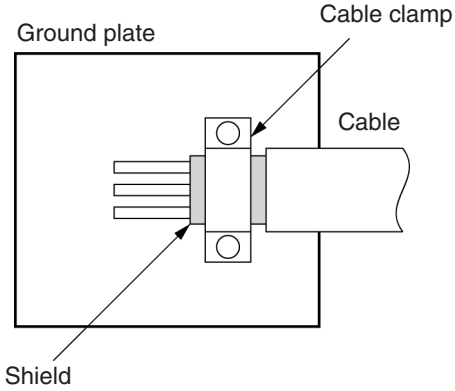

LVD Conformance

- Always connect the Inverter and power supply via a molded case circuit breaker (MCCB) suitable to the Inverter for protecting the Inverter from damage that may result from short-circuiting.
- Use one MCCB per Inverter.
- Select a suitable MCCB from the following table.
- With 400-V Inverters, it is necessary to ground to the power supply's neutral phase.

300V Models

Inverter	MCCB (Mitsubishi Electric)	
Model CIMR-J7AZ-	**Type**	**Rated current (A)**
20P1	NF30	5
20P2		5
20P4		5
20P7		10
21P5		20
22P2		20
24P0		30
B0P1	NF30	5
B0P2		5
B0P4		10
B0P7		20
B1P5		20

400-V Models

Inverter	MCCB (Mitsubishi Electric)	
Model CIMR-J7AZ-	**Type**	**Rated current (A)**
40P2	NF30	5
40P4		5
40P7		5
41P5		10
42P2		10
44P0		20

To satisfy LVD (Low-voltage Directive) requirements, the system must be protected by a molded case circuit breaker (MCCB) when a short-circuit occurs. A single MCCB may be shared with more than one Inverter or with other machines. In that case, however, take some appropriate measures so that the MCCB will protect all the Inverters from the occurrence of any single short-circuit.

The frequency reference power supply (FS) of the Inverter is of basic insulation construction. When connecting the Inverter to peripheral devices, be sure to increase the degree of insulation.

CHAPTER 3
Preparing for Operation and Monitoring

3-1 Nomenclature. 34
3-2 Outline of Operation 35

3-1 Nomenclature

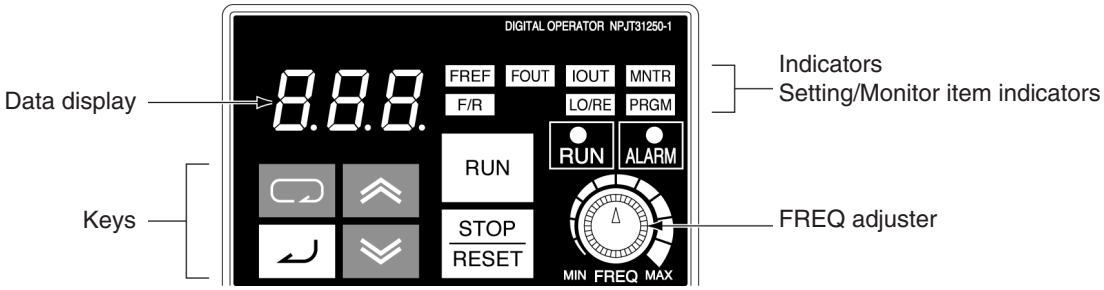

Appearance	Name	Function
8.8.8.	Data display	Displays relevant data items, such as frequency reference, output frequency, and parameter set values.
MIN MAX FREQUENCY	FREQ adjuster	Sets the frequency reference within a range between 0 Hz and the maximum frequency.
FREF	FREF indicator	The frequency reference can be monitored or set while this indicator is lit.
FOUT	FOUT indicator	The output frequency of the Inverter can be monitored while this indicator is lit.
IOUT	IOUT indicator	The output current of the Inverter can be monitored while this indicator is lit.
MNTR	MNTR indicator	The values set in U01 through U10 are monitored while this indicator is lit.
F/R	F/R indicator	The direction of rotation can be selected while this indicator is lit, when operating the Inverter with the RUN Key.
LO/RE	LO/RE indicator	The operation of the Inverter through the Digital Operator or according to the parameters set is selectable while this indicator is lit. **Note** Note This status of this indicator can be only monitored while the Inverter is in operation. Any RUN command input is ignored while this indicator is lit.
PRGM	PRGM indicator	The parameters in n01 through n79 can be set or monitored while this indicator is lit. **Note** While the Inverter is in operation, the parameters can be only monitored and only some parameters can be changed. Any RUN command input is ignored while this indicator is lit.
	Mode Key	Switches the setting and monitor item indicators in sequence. Parameter setting being made is canceled if this key is pressed before entering the setting.
	Increment Key	Increases multi-function monitor numbers, parameter numbers, and parameter set values.
	Decrement Key	Decreases multi-function monitor numbers, parameter numbers, and parameter set values.
	Enter Key	Enters multi-function monitor numbers, parameter numbers, and internal data values after they are set or changed.
RUN	RUN Key	Starts the Inverter running when the CIMR-J7AZ is in operation with the Digital Operator.
STOP RESET	STOP/RESET Key	Stops the Inverter unless n06 is set to disable the STOP Key. Functions as a Reset Key when an Inverter error occurs. (See note.)

Note For safety's reasons, the reset will not work while a RUN command (forward or reverse) is in effect. Wait until the RUN command is OFF before resetting the Inverter.

3-2 Outline of Operation

Selecting Indicators

Whenever the Mode Key is pressed, an indicator is lit in sequence beginning with the FREF indicator. The data display indicates the item corresponding to the indicator selected.
The FOUT or IOUT indicator will be lit by turning the Inverter on again if the Inverter is turned off while the FOUT or IOUT indicator is lit. The FREF indicator will be lit by turning the Inverter on again if the Inverter is turned off while an indicator other than the FOUR or IOUT indicator is lit.

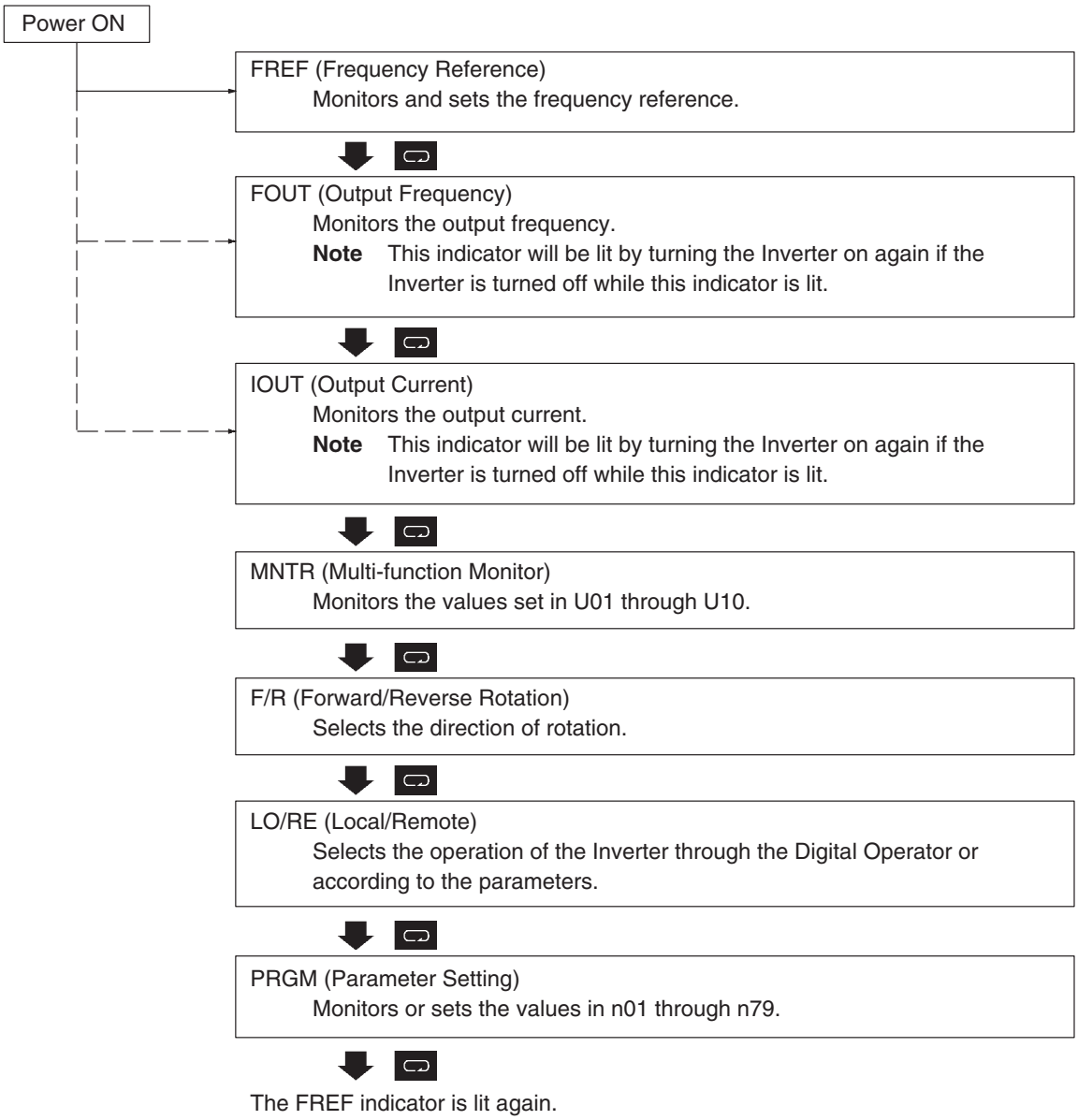

Example of Frequency Reference Settings

Key sequence	Indicator	Display example	Explanation
	FREF	6.0	Power ON **Note** If the FREF indicator has not been lit, press the Mode Key repeatedly unit the FREF indicator is lit.
⌃ ⌄	FREF	60.0	Use the Increment or Decrement Key to set the frequency reference. The data display will flash while the frequency reference is set. (see note 1)
↵	FREF	60.0	Press the Enter Key so that the set value will be entered and the data display will be lit. (see note 1)

Note

1. The Enter Key need not be pressed when performing the setting for n08. The frequency reference will change when the set value is changed with the Increment or Decrement Key while the data display is continuously lit.
2. The frequency reference can be set in either of the following cases.
   - Parameter n03 for frequency reference selection is set to 1 (i.e., frequency reference 1 is enabled) and the Inverter is in remote mode.
   - Parameter n07 for frequency selection in local mode is set to 1 (i.e., the Digital Operator is enabled) and the Inverter is in local mode.
   - Frequency references 2 through 8 are input for multi-step speed operation.
3. The frequency reference can be changed, even during operation.

Example of Multi-function Display

Key sequence	Indicator	Display	Explanation
	FREF	6.0	Power ON
⊂⊃	MNTR	U01	Press the Mode Key repeatedly until the MNTR indicator is lit. U01 will be displayed.
⌃ ⌄	MNTR	U05	Use the Increment or Decrement Key to select the monitor item to be displayed.
↵	MNTR	283	Press the Enter Key so that the data of the selected monitor item will be displayed.
⊂⊃	MNTR	U05	The monitor number display will appear again by pressing the Mode Key.

Status Monitor

Item	Display	Display unit	Function
U01	Frequency reference	Hz	Monitors the frequency reference. (Same as FREF)
U02	Output frequency	Hz	Monitors the output frequency. (Same as FOUT)
U03	Output current	A	Monitors the output current. (Same as IOUT)
U04	Output voltage	V	Monitors the internal output voltage reference value of the Inverter.
U05	DC bus voltage	V	Monitors the DC voltage of the internal main circuit of the Inverter.
U06	Input terminal status	---	Shows the ON/OFF status of inputs. : Input ON : No input Terminal S1: Forward/Stop Terminal S2: Multi-function input 1 (S2) Terminal S3: Multi-function input 2 (S3) Terminal S4: Multi-function input 3 (S4) Terminal S5: Multi-function input 4 (S5) Not used
U07	Output terminal status	---	Shows the ON/OFF status of outputs. : Closed : Open Terminal MA: Multi-function contact output Not used
U09	Error log (most recent one)	---	Displays the latest error. Error
U10	Software No.	---	OMRON use only.

Example of Forward/Reverse Selection Settings

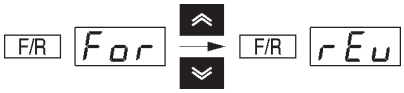

Key sequence	Indicator	Display example	Explanation
	F/R	For	Press the Mode Key repeatedly until the F/R indicator is lit. The present setting will be displayed. For: Forward; rEv: Reverse
	F/R	rEu	Use the Increment or Decrement Key to change the direction of motor rotation. The direction of motor rotation selected will be enabled when the display changes after the key is pressed.

Note The direction of motor rotation can be changed, even during operation.

Example of Local/Remote Selection Settings

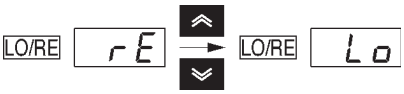

Key sequence	Indicator	Display example	Explanation
	LO/RE	rE	Press the Mode Key repeatedly until the LO/RE indicator is lit. The present setting will be displayed. rE: Remote; Lo: Local
	LO/RE	Lo	Use the Increment or Decrement Key to set the Inverter to local or remote mode. The selection will be enabled when the display changes after the key is pressed.

Note

1. Local or remote selection is possible only when the Inverter is not in operation. The present setting can be monitored when the Inverter is in operation.
2. Local or remote settings in multi-function input terminals can be changed through the multifunction input terminals only.
3. Any RUN command input will be ignored while the LO/RE indicator is lit. To enable a RUN command, first turn the RUN command OFF and then press the Mode Key to display an item that has a green indicator (FREF to MNTR). Then input the RUN command again.

Example of Paramter Settings

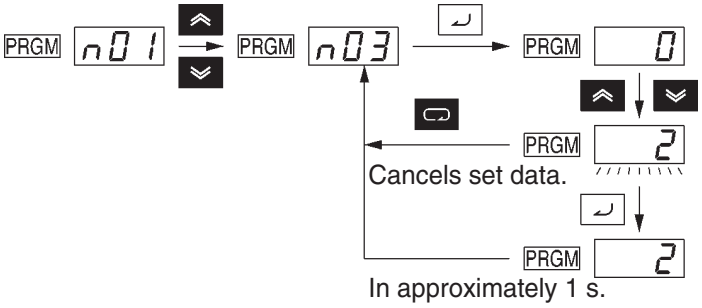

Key sequence	Indicator	Display example	Explanation
	FREF	0.0	Power ON
	PRGM	n01	Press the Mode Key repeatedly until the PRGM indicator is lit.
	PRGM	n03	Use the Increment or Decrement Key to set the parameter number.
	PRGM	0	Press the Enter Key. The data of the selected parameter number will be displayed.
	PRGM	2	Use the Increment or Decrement Key to set the data. At that time the display will flash.
	PRGM	2	Press the Enter Key so that the set value will be entered and the data display will be lit. (see note 1)
In approximately 1 s.	PRGM	n03	The parameter number will be displayed.

Note

1. To cancel the set value, press the Mode Key instead. The parameter number will be displayed.
2. There are parameters that cannot be changed while the Inverter is in operation. Refer to the list of parameters. When attempting to change such parameters, the data display will not change by pressing the Increment or Decrement Key.
3. Any RUN command input will be ignored while the Parameter Setting (PRGM) indicator is lit. To enable a RUN command, first turn the RUN command OFF and then press the Mode Key to display an item that has a green indicator (FREF to MNTR). Then input the RUN command again.

CHAPTER 4
Test Run

4-1 Procedure for Test Run 43
4-2 Operation Example 45
4-2-1 Power Connection 45
4-2-2 Check the Display Status 45
4-2-3 Initializing Parameters 46
4-2-4 Setting the Rated Motor Current 46
4-2-5 No-load Operation 47
4-2-6 Actual Load Operation 48

⚠ **WARNING**	Turn ON the input power supply only after mounting the front cover, terminal covers, bottom cover, Operator, and optional items. Not doing so may result in electrical shock.
⚠ **WARNING**	Do not remove the front cover, terminal covers, bottom cover, Operator, or optional items while the power is being supplied. Not doing so may result in electrical shock or damage to the product.
⚠ **WARNING**	Do not operate the Operator or switches with wet hands. Doing so may result in electrical shock.
⚠ **WARNING**	Do not touch the inside of the Inverter. Doing so may result in electrical shock.
⚠ **WARNING**	Do not come close to the machine when using the error retry function because the machine may abruptly start when stopped by an alarm. Doing so may result in injury.
⚠ **WARNING**	Do not come close to the machine immediately after resetting momentary power interruption to avoid an unexpected restart (if operation is set to be continued in the processing selection function after momentary power interruption is reset). Doing so may result in injury.
⚠ **WARNING**	Provide a separate emergency stop switch because the STOP Key on the Operator is valid only when function settings are performed. Not doing so may result in injury.
⚠ **WARNING**	Be sure confirm that the RUN signal is turned OFF before turning ON the power supply, resetting the alarm, or switching the LOCAL/REMOTE selector. Doing so while the RUN signal is turned ON may result in injury.
⚠ **Caution**	Be sure to confirm permissible ranges of motors and machines before operation because the Inverter speed can be easily changed from low to high. Not doing so may result in damage to the product.
⚠ **Caution**	Provide a separate holding brake when necessary. Not doing so may result in injury.
⚠ **Caution**	Do not perform a signal check during operation. Doing so may result in injury or damage to the product.
⚠ **Caution**	Do not carelessly change settings. Doing so may result in injury or damage to the product.

4-1 Procedure for Test Run

1. **Installation and Mounting**

   Install the Inverter according to the installation conditions. Refer to page 6. Ensure that the installation conditions are met.

2. **Wiring and Connection**

   Connect to the power supply and peripheral devices. Refer to page 10. Select peripheral devices which meet the specifications and wire correctly.

3. **Power Connection**

   Carry out the following pre-connection checks before turning on the power supply.

   - Always ensure that a power supply to the correct voltage is used and that the power input terminals (R/L1, S/L2, and T/L3) are wired correctly.
     CIMR-J7AZ-2□: 3-phase 200 to 230 V AC
     CIMR-J7AZ-B□: Single-phase 200 to 240 V AC (Wire R/L1 and S/L2)
     CIMR-J7AZ-4□: 3-phase 380 to 460 V AC
   - Make sure that the motor output terminals (U/T1, V/T2, and W/T3) are connected to the motor correctly.
   - Ensure that the control circuit terminals and the control device are wired correctly. Make sure that all control terminals are turned off.
   - Set the motor to no-load status (i.e., not connected to the mechanical system).
   - Having conducted the above checks, connect the power supply.

4. **Check the Display Status**

   Check to be sure that there are no faults in the Inverter.

   - If the display at the time the power is connected is normal, it will read as follows:
     RUN indicator: Flashes
     ALARM indicator: Off
     Setting/Monitor indicators: FREF, FOUT, or IOUT is lit.
     Data display: Displays the corresponding data of the indicator that is lit.
   - When a fault has occurred, the details of the fault will be displayed. In that case, refer to Chapter 8 Maintenance Operations and take necessary remedies.

5. **Initializing Parameters**

   Initialize the parameters.

   - Set n01 to 8 for initialization in 2-wire sequence.

6. **Setting Parameters**

   Set the parameters required for a test run.

   - Set the rated motor current in order to prevent the motor from burning due to overloading.

7. **No-load Operation**

   Start the no-load motor using the Digital Operator.

   - Set the frequency reference using the Digital Operator and start the motor using key sequences.

8. **Actual Load Operation**

   Connect the mechanical system and operate using the Digital Operator.

   - When ehere are no difficulties using the no-load operation, connect the mechanical system to the motor and operate using the Digital Operator.

9. Operation

Basic Operation:
Operation based on the basic settings required to start and stop the Inverter. Refer to page 5-1.

Advanced Operation:
Operation that uses PID control or other functions. Refer to page 6-1.

- For operation within standard parameters, refer to Chapter 5 Basic Operation.
- Refer to Chapter 5 Basic Operation and Chapter 6 Advanced Operation for the various advanced functions, such as stall prevention, carrier frequently setting, overtorque detection, torque compensation, and slip compensation.

4-2 Operation Example

4-2-1 Power Connection

Checkpoints before Connecting the Power Supply

- Check that the power supply is on the correct voltage and that the motor output terminals (R/L1, S/L2, and T/L3) are connected to the motor correctly.

  CIMR-J7AZ-2□: Three-phase 200 to 230 V AC

  CIMR-J7AZ-B□: Single-phase 200 to 240 V AC (Wire R/L1 and S/L2)

  CIMR-J7AZ-4□: 3-phase 380 to 460 V AC
- Make sure that the motor output terminals (U/T1, V/T2, and W/T3) are connected to the motor correctly.
- Ensure that the control circuit terminals and the control device are wired correctly. Make sure that all control terminals are turned off.
- Set the motor to no-load status (i.e., not connected to the mechanical system).

Connecting the Power Supply

- After conducting the above checks, connect the power supply.

4-2-2 Check the Display Status

- If the display is normal when the power is connected, it will read as follows:

  Normal

  RUN indicator: Flashes

  ALARM indicator: Off

  Setting/Monitor indicators: FREF, FOUT, or IOUT is lit.

  Data display: Displays the corresponding data for the indicator that is lit.
- When a fault has occurred, the details of the fault will be displayed. In that case, refer to Chapter 8 Maintenance Operations and take necessary action.

  Fault

  RUN indicator: Flashes

  ALARM indicator: Lit (fault detection) or flashes (alarm detection)

  Setting/Monitor indicators: FREF, FOUT, or IOUT is lit.

  Data display: The fault code, such as UV1, is displayed. The display will differ depending on the type of fault.

4-2-3 Initializing Parameters

- Initialize the parameters using the following procedure.
- To initialize the parameters, set n01 to 8.

Key sequence	Indicator	Display example	Explanation
	FREF	0.0	Power ON
	PRGM	n01	Press the Mode Key repeatedly until the PRGM indicator is lit.
↵	PRGM	1	Press the Enter Key. The data of n01 will be displayed.
⋀ ⋁	PRGM	8	Use the Increment or Decrement Key to set n01 to 8. The display will flash.
↵	PRGM	8	Press the Enter Key so that the set value will be entered and the data display will be lit.
In approximately 1 s.	PRGM	n01	The parameter number will be displayed.

4-2-4 Setting the Rated Motor Current

- Set the motor current parameter in n32 in order to prevent the motor from burning due to overloading.

Setting the Rated Motor Current

- Check the rated current on the motor nameplate and set the motor current parameter.
- This parameter is used for the electronic thermal function for motor overload detection (OL1). By setting the correct parameter, the overloaded motor will be protected from burning.

n32	Rated Motor Current			Changes during operation	No
Setting range	0.0% to 120% (A) of rated output current of the Inverter	Unit of setting	0.1 A	Default setting	(see note 1)

Note
1. The standard rated current of the maximum applicable motor is the default rated motor current.
2. Motor overload detection (OL1) is disabled by setting the parameter to 0.0.

Key sequence	Indicator	Display example	Explanation
	PRGM	n01	Displays the parameter number.
⋀ ⋁	PRGM	n32	Use the Increment or Decrement Key until n32 is displayed.
↵	PRGM	1.9	Press the Enter Key. The data of n32 will be displayed.
⋀ ⋁	PRGM	1.8	Use the Increment or Decrement Key to set the rated motor current. The display will flash.
↵	PRGM	1.8	Press the Enter Key so that the set value will be entered and the data display will be lit.
In approximately 1 s.	PRGM	n32	The parameter number will be displayed.

4-2-5 No-load Operation

- Start the no-load motor (i.e., not connected to the mechanical system) using the Digital Operator.

Note Before operating the Digital Operator, check that the FREQ adjuster is set to MIN.

Forward/Reverse Rotation with the Digital Operator

Key sequence	Indicator	Display example	Explanation
	FREF	0.0	Press the Mode Key to turn on the FREF indicator. Monitors the frequency reference.
RUN	FREF	0.0	Press the RUN Key. The RUN Indicator will be lit.
MIN MAX FREQUENCY	FREF	10.0	Turn the FREQ adjuster clockwise slowly. The monitored frequency reference will be displayed. The motor will start rotating in the forward direction according to the frequency reference.
	F/R	For	Press the MODE Key to turn on the F/R indicator. “For” will be displayed.
	F/R	rEu	Use the Increment or Decrement Key to change the direction of motor rotation. The direction of motor rotation selected will be enabled when the display is changed after the Key is pressed.

- After changing the frequency reference or the rotation direction, check that there is no vibration or abnormal sound from the motor.
- Check that no faults have occurred in the Inverter during operation.

Stopping the Motor

On completion of operating the motor in the no-load state in the forward or reverse direction, press the STOP/RESET Key. The motor will stop.

4-2-6 Actual Load Operation

- After checking the operation with the motor in no-load status, connect the mechanical system and operate with an actual load.

Note Before operating the Digital Operator, check that the FREQ adjuster is set to MIN.

Connecting the System

- After confirming that the motor has stopped completely, connect the mechanical system.
- Be sure to tighten all the screws when fixing the motor axis in the mechanical system.

Operation Using the Digital Operator

- In case a fault occurs during operation, make sure the Stop Key on the Digital Operator is easily accessible.
- Use the Digital Operator in the same way as no-load operation.
- First set the frequency reference to a low speed of one tenth the normal operating speed.

Checking the Operating Status

- Having checked that the operating direction is correct and that the machine is operating smoothly at slow speed, increase the frequency reference.
- After changing the frequency reference or the rotation direction, check that there is no vibration or abnormal sound from the motor. Check the monitor display (IOUT or multi-function monitor U03) to ensure that the output current is not becoming excessive.

CHAPTER 5
Basic Operation

5-1 Initial Settings 50
5-2 V/f Control. 51
5-3 Setting the Local/Remote Mode 53
5-4 Selecting the Operation Command 54
5-5 Setting the Frequency Reference. 55
5-5-1 Selecting the Frequency Reference. 55
5-5-2 Upper and Lower Frequency Reference Limits 56
5-5-3 Adjusting the Analog Input. 56
5-5-4 Setting Frequency References through Key Sequences 57
5-6 Setting the Acceleration/Deceleration Time 60
5-7 Selecting the Reverse Rotation-prohibit 62
5-8 Selecting the Interruption Mode 62
5-9 Multi-function I/0 63
5-9-1 Multi-function Input 63
5-9-2 Multi-function Output. 67
5-10 Analog Monitor Output 68

This section explains the basic settings required to operate and stop the Inverter. The settings of parameters described here will be sufficient for simple Inverter operations. First, make these basic settings, then skip to the explanations of those special functions, even when your application requires special functions, such as stall prevention, carrier frequency setting, overtorque detection, torque compensation, slip compensation. Refer to Chapter 6 Advanced Operation.

5-1 Initial Settings

- The following initial settings are required.

  Parameter Write-prohibit Selection/Parameter Initialization (n01): Set n01 to 1 so that n01 through n79 can be set or displayed.

  Rated Motor Current (n32): Check the rated current on the motor nameplate and set the parameter.

Setting the Parameter Write-prohibit Selection/Parameter Initialization (n01)

- Set n01 to 1 so that n01 through n79 can be set or displayed.

n01	Parameter Write-prohibit Selection/ Parameter Initialization			Changes during operation	No
Setting range	0, 1, 6, 8, 9	Unit of setting	1	Default setting	1

Note This parameter makes it possible to write-prohibit parameters, change the parameter set or displayed range, or initialize all parameters to default values.

Set Value

Value	Description
0	Only n01 can be displayed and set. The n02 through n79 parameters can be displayed only.
1	The n01 through n79 parameters can be displayed and set.
6	Only the error log memory is cleared.
8	Enables the initialization of all parameters in 2-wire sequence so that the parameters will return to default values.
9	Enables the initialization of all parameters in 3-wire sequence.

Setting the Rated Motor Current (n32)

Set the rated motor current (n32) in order to prevent the motor from burning due to overloading.

Check the rated current on the motor nameplate and set the parameter.

- This parameter is used for the electronic thermal function for motor overload detection (OL1). By setting the correct parameter, the overloaded motor will be protected from burning.

n32	Rated Motor Current			Changes during operation	No
Setting range	0.0% to 120% (A) of rated output current of Inverter	Unit of setting	0.1 A	Default setting	(see note 1)

Note
1. The standard rated current of the maximum applicable motor is the default rated motor current.
2. Motor overload detection (OL1) is disabled by setting the parameter to 0.0.

5-2 V/f Control

Setting the V/f Patterns (n09 to n15)

- Set the V/f pattern so that the motor output torque is adjusted to the required load torque.
- The J7AZ incorporates an automatic torque boost function. Therefore, a maximum of 150% torque can be output at 3 Hz without changing the default settings. Check the system in trial operation and leave the default settings as they are if no torque characteristic changes are required.

n09	**Maximum Frequency (FMAX)**			**Changes during operation**	**No**
Setting range	50.0 to 400 Hz	Unit of setting	0.1 Hz (see note 1)	Default setting	60.0

n10	**Maximum Voltage (VMAX)**			**Changes during operation**	**No**
Setting range	1 to 255 (V) (see note 2)	Unit of setting	1 V	Default setting	200 (see note 2)

n11	**Maximum Voltage Frequency (FA)**			**Changes during operation**	**No**
Setting range	0.2 to 400 (Hz)	Unit of setting	0.1 Hz (see note 1)	Default setting	60.0

n12	**Middle Output Frequency (FB)**			**Changes during operation**	**No**
Setting range	0.1 to 399 (Hz)	Unit of setting	0.1 Hz (see note 1)	Default setting	1.5

n13	**Middle Output Frequency Voltage (VC)**			**Changes during operation**	**No**
Setting range	1 to 255 (V) (see note 2)	Unit of setting	1 V	Default setting	12 (see note 2)

n14	**Minimum Output Frequency (FMIN)**			**Changes during operation**	**No**
Setting range	0.1 to 10.0 (Hz)	Unit of setting	0,1 Hz	Default setting	1.5

n15	**Minimum Output Frequency Voltage (VMIN)**			**Changes during operation**	**No**
Setting range	1 to 50 (V) (see note 2)	Unit of setting	1 V	Default setting	12 (see note 2)

Note 1. Values will be set in 0.1-Hz increments if the frequency is less than 100 Hz and 1-Hz increments if the frequency is 100 Hz or greater.

2. With 400-V Inverters, the values for the upper limit of setting ranges and the default settings will be twice those given in the above table.

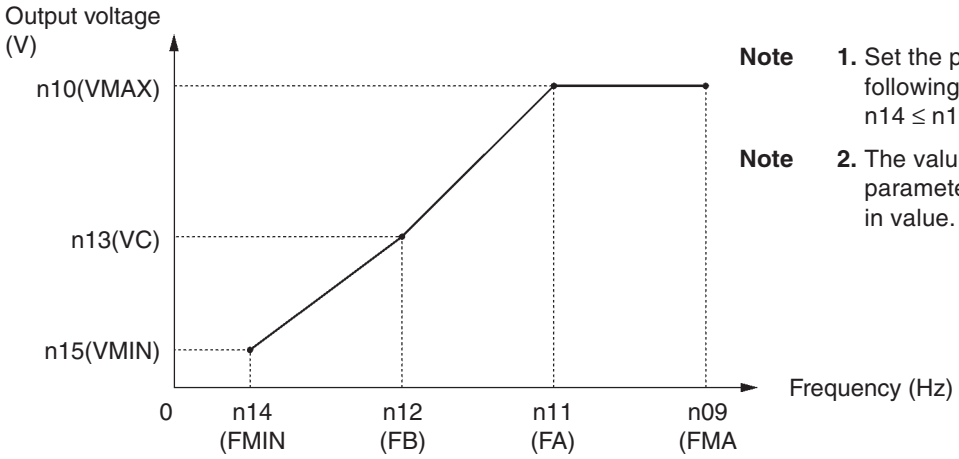

Note **1.** Set the parameters so that the following condition will be satisfied.
n14 ≤ n12 < n11 ≤ n09

Note **2.** The value set in n13 will be ignored if parameters n14 and n12 are the same in value.

- Set the rated motor input frequency to the maximum voltage frequency (FMAX) while the rated motor input voltage is set to the maximum output voltage (VMAX).
- The vertical-axis load or the load with high viscous friction may require high torque at low speed. If the torque is insufficient at low speed, increase the voltage in the low-speed range by 1 V, provided that no overload (OL1 or OL2) is detected. If an overload is detected, decrease the set values or consider the use of an Inverter model with a higher capacity.
- The required torque of fan or pump control increases in proportion to the square of the speed. By setting a quadratic V/f pattern to increase the voltage in the low-speed range, the power consumption of the system will increase.

5-3 Setting the Local/Remote Mode

The J7AZ operates in local or remote mode. The following description provides information on these modes and how to select them.

Basic Conecpt

Operation mode	Basic concept	Description
Remote	The Inverter in a system operates according to the control signal of the host controller.	RUN Command Selectable from two types and set in n02. Frequency Reference Selectable from five types and set in n03.
Local	The Inverter in a system operates independently in this mode so that the Inverter can be checked independently.	RUN Command Starts with the RUN Key of the Digital Operator and stops with the STOP/RESET Key. Frequency Reference Set with the Digital Operator or the FREQ adjuster. Set with frequency reference selection in local mode in n07.

Local/Remote Selection Methods

The following two selection methods are available to set the Inverter to local or remote mode. While the operation command is being input, however, the Inverter cannot be set to local mode from remote mode or vice versa.

- Select the mode with the LO/RE Key of the Digital Operator.
- Set any one of multi-function inputs 1 through 4 (n36 through n39) to 17 to set the Inverter to local mode with control input turned ON.

Note If the above setting is made, mode selection will be possible only with multi-function input, and not with the Digital Operator.

The Inverter always goes into remote mode when the power is turned ON. Therefore, to operate immediately after power-up, set up the RUN command and frequency reference settings in remote mode in advance.

5-4 Selecting the Operation Command

The following description provides information on how to input operation commands to start or stop the Inverter or change the direction of rotation of the Inverter.

Three types of command input methods are available. Select either one of them according to the application.

Selecting the Operation Mode (n02)

- Select the method of operation mode input to start or stop the Inverter.
- The following method is enabled in remote mode only. The command can be input through key sequences on the Digital Operator.

n02	Operation Command Selection			Changes during operation	No
Setting range	0 to 2	Unit of setting	1	Default setting	0

Set Values

Value	Description
0	The RUN and STOP/RESET Keys of the Digital Operator are enabled.
1	Multi-function input in 2- or 3-wire sequence through the control circuit terminals is enabled.
2	Operation commands via RS-422A/485 communications are enabled.

Selecting the STOP/RESET Key Function (n06)

- When parameter n02 is set to 1, set whether or not to use the STOP/RESET Key of the Digital Operator to stop the Inverter in remote mode. The STOP/RESET Key is always enabled in local mode regardless of the setting in n02.

n06	STOP Key Function Selection			Changes during operation	No
Setting range	0, 1	Unit of setting	1	Default setting	0

Set Values

Value	Description
0	The STOP/RESET Key of the Digital Operator is enabled.
1	The STOP/RESET Key of the Digital Operator is disabled. This setting is available only when the Digital Operator is selected for operation command input.

5-5 Setting the Frequency Reference

5-5-1 Selecting the Frequency Reference

The following description provides information on how to set the frequency reference in the Inverter. Select the method according to the operation mode.

Remote mode: Select and set one out of six frequency references in n03.

Local mode: Select and set one out of two frequency references in n07.

Selecting the Frequency Reference (n03) in Remote Mode

- Select the input method of frequency references in remote mode.
- Five frequency references are available in remote mode. Select one of them according to the application.

n03	Frequency Reference Selection			Changes during operation	No
Setting range	0 to 4, 6	Unit of setting	1	Default setting	0

Set Values

Value	Description
0	The FREQ adjuster of the Digital Operator is enabled. (see note 1)
1	Frequency reference 1 (n21) is enabled.
2	The frequency reference control terminal (for 0- to 10-V input) is enabled. (see note 2)
3	The frequency reference control terminal (for 4- to 20-mA current input) is enabled. (see note 3)
4	The frequency reference control terminal (for 0- to 20-mA current input) is enabled. (see note 3)
6	The frequency reference via RS-422A/485 communications is enabled.

Note

1. The maximum frequency (FMAX) is set when the FREQ adjuster is set to MAX.
2. The maximum frequency (FMAX) is set with 10 V input.
3. The maximum frequency (FMAX) is set with 20 mA input, provided that SW8 on the control PCB is switched from V to I.

The frequency reference set in n03 works as frequency reference 1 when the Inverter is in multi-step speed operation. The set values in n22 through n28 for frequency references 2 through 8 are enabled.

Selecting the Frequency Reference (n07) in Local Mode

- Select the input method of frequency references in local mode.
- Two frequency references are available in local mode. Select one of them according to the application.

n07	Frequency Reference Selection in Local Mode			Changes during operation	No
Setting range	0, 1	Unit of setting	1	Default setting	0

Set Values

Value	Description
0	The FREQ adjuster of the Digital Operator is enabled. (see note 1)
1	Key sequences on the Digital Operator are enabled. (see note 2)

5-5-2 Upper and Lower Frequency Reference Limits

Regardless of the methods of operation mode and frequency reference input, the upper and lower frequency reference limits can be set.

Setting the Frequency Reference Upper and Lower Limits (n30 and n31)

- Set the upper and lower frequency reference limits as percentage based on the maximum frequency as 100%.

n30	Frequency Reference Upper Limit			Changes during operation	No
Setting range	0% to 110% (Max. frequency = 100%)	Unit of setting	1%	Default setting	100

n31	Frequency Reference Lower Limit			Changes during operation	No
Setting range	0% to 110% (Max. frequency = 100%)	Unit of setting	1%	Default setting	0

Note If n31 is set to a value less than the minimum output frequency (FMIN), the Inverter will have no output when a frequency reference less than the minimum output frequency input is ON.

5-5-3 Adjusting the Analog Input

Input characteristic adjustments may be necessary for analog frequency references to be input. At that time, use the following parameters for gain, bias, and filter time parameter adjustments.

FR Terminal Adjustments for Frequency Reference Input

Gain and Bias Settings (n41 and n42)

- Set the input characteristics of analog frequency references in n41 (for the frequency reference gain) and n42 (for the frequency reference bias).
- Set the frequency of maximum analog input (10 V or 20 mA) in n41 as percentage based on the maximum frequency as 100%.
- Set the frequency of minimum analog input (0 V, 0 mA, or 4 mA) in n42 as percentage based on the maximum frequency as 100%.

n41	Frequency Reference Gain			Changes during operation	Yes
Setting range	0% to 255% (Max. frequency = 100%)	Unit of setting	1%	Default setting	100

n42	Frequency Reference Bias			Changes during operation	Yes
Setting range	-99% to 99% (Max. frequency = 100%)	Unit of setting	1%	Default setting	0

- Analog Frequency Reference Filter Time (n43)
  - The digital filter with a first-order lag can be set for analog frequency references to be input.
  - This setting is ideal if the analog input signal changes rapidly or the signal is subject to noise interference.
  - The larger the set value is, the slower the response speed will be.

n43	Analog Frequency Reference Filter Time			Changes during operation	No
Setting range	0.00 to 2.00 (s)	Unit of setting	0.01 s	Default setting	0.10

5-5-4 Setting Frequency References through Key Sequences

The following description provides information on parameters related to frequency reference settings through key sequences on the Digital Operator

Setting Frequency References 1 through 8 and the Inching Frequency Command (n21 through n28 and n29)

A total of nine frequency references (frequency references 1 through 8) and an inching frequency command can be set together in the Inverter.

Setting Frequency References 1 through 8 (n21 through n28)

n21	Frequency Reference 1			Changes during operation	Yes
Setting range	0.0 to max. frequency	Unit of setting	0.01 Hz (see note 1)	Default setting	6.0

n22	Frequency Reference 2			Changes during operation	Yes
Setting range	0.0 to max. frequency	Unit of setting	0.01 Hz (see note 1)	Default setting	0.0

n23	Frequency Reference 3			Changes during operation	Yes
Setting range	0.0 to max. frequency	Unit of setting	0.01 Hz (see note 1)	Default setting	0.0

n24	Frequency Reference 4			Changes during operation	Yes
Setting range	0.0 to max. frequency	Unit of setting	0.01 Hz (see note 1)	Default setting	0.0

n25	Frequency Reference 5			Changes during operation	Yes
Setting range	0.0 to max. frequency	Unit of setting	0.01 Hz (see note 1)	Default setting	0.0

n26	Frequency Reference 6			Changes during operation	Yes
Setting range	0.0 to max. frequency	Unit of setting	0.01 Hz (see note 1)	Default setting	0.0

n27	Frequency Reference 7			Changes during operation	Yes
Setting range	0.0 to max. frequency	Unit of setting	0.01 Hz (see note 1)	Default setting	0.0

n28	Frequency Reference 8			Changes during operation	Yes
Setting range	0.0 to max. frequency	Unit of setting	0.01 Hz (see note 1)	Default setting	0.0

Note

1. Values will be set in 0.1-Hz increments if the frequency is less than 100 Hz and 1-Hz increments if the frequency is 100 Hz or over.
2. Frequency reference 1 is enabled with n03 for frequency reference selection set to 1.
3. Frequency references 2 through 8 are enabled by setting multi-step speed references 1, 2, and 3 in n36 through n39 for multi-function input. Refer to the following table for the relationship between multi-step speed references 1 through 3 and frequency references 1 through 8.

Frequency reference	Multi-step speed reference 1 (Set value: 6)	Multi-step speed reference 2 (Set value: 7)	Multi-step speed reference 3 (Set value: 8)
Frequency reference 1	OFF	OFF	OFF
Frequency reference 2	ON	OFF	OFF
Frequency reference 3	OFF	ON	OFF
Frequency reference 4	ON	ON	OFF
Frequency reference 5	OFF	OFF	ON
Frequency reference 6	ON	OFF	ON
Frequency reference 7	OFF	ON	ON
Frequency reference 8	ON	ON	ON

No multi-step speed reference 3 settings will be required if only frequency references 1 through 4 are used, for example. Any multi-step speed reference not set is regarded as turned-OFF input.

Setting the Inching Frequency Command (n29)

The inching frequency command must be set as multi-function input in order to use the inching frequency command.

n29	Inching Frequency Command			Changes during operation	Yes
Setting range	0.0 to max. frequency	Unit of setting	0.01 Hz (see note 1)	Default setting	6.0

Note

1. The value will be set in 0.1-Hz increments if the frequency is less than 100 Hz and 1-Hz increments if the frequency is 100 Hz or over.
2. In order to use the inching frequency command, one of the n36 through n39 parameters for multi-function input must be set to 10 as an inching frequency command. Parameter n29 is selectable by turning on the multi-function input set with the inching frequency command. The inching frequency command takes precedence over the multi-step speed reference (i.e., when the inching frequency command is ON, all multi-step speed reference input will be ignored).

Setting the Frequency Reference with the FREF Indicator Lit

The frequency reference can be set while the FREF indicator of the Digital Operator is lit in the following cases.

- Parameter n03 for frequency reference selection is set to 1, which enables frequency reference 1, and the Inverter is in remote mode.
- Parameter n07 for frequency selection in local mode is set to 1, which enables key sequences on the Digital Operator, and the Inverter is in local mode.
- Frequency references 2 through 8 are set with multi-step speed reference input.

The frequency reference can be changed, even during operation.

When the frequency reference is changed while the FREF indicator is lit, the corresponding parameter is changed simultaneously. For example, if frequency reference 2 has been selected with multi-function input (a multi-step speed reference), the set value in n22 (for frequency reference 2) will be changed simultaneously when the frequency reference is changed while the FREF indicator is lit.

Take the following default steps, for example, to change the frequency reference with the FREF indicator lit.

Key sequence	Indicator	Display example	Explanation
	FREF	6.0	Power On **Note** If the FREF indicator has not been lit, press the Mode Key repeatedly until the FREF indicator is lit.
⌃ ⌄	FREF	60.0	Use the Increment or Decrement Key to set the frequency reference. The data display will flash while the frequency reference is set.
↵	FREF	60.0	Press the Enter Key so that the set value will be entered and the data display will be lit.

Setting the Key Sequential Frequency (n08)

- The Enter Key need not be pressed when changing the setting in n08. In that case, the frequency reference will change when the set value is changed with the Increment or Decrement Key while the data display is continuously lit.

n08	Key Sequential Frequency Setting			Changes during operation	No
Setting range	0, 1	Unit of setting	1	Default setting	0

Set Values

Value	Description
0	Enter Key enabled (The set value is entered with the Enter Key pressed.)
1	Enter Key disabled (The set value set is entered immediately.)

5-6 Setting the Acceleration/Deceleration Time

The following description provides information on parameters related to acceleration and deceleration time settings.
Trapezoidal and S-shape acceleration and deceleration are available. Using the Sshape characteristic function for acceleration and deceleration can reduce shock to the machinery when stopping or starting.

Setting the Acceleration/Deceleration Time (n16 through n19)

- Two acceleration times and two deceleration times can be set.
- The acceleration time is the time required to go from 0% to 100% of the maximum frequency and the deceleration time is the time required to go from 100% to 0% of the maximum frequency. The actual acceleration or deceleration time is obtained from the following formula.

  Acceleration/Deceleration time =
  (Acceleration/Deceleration time set value)
  × (Frequency reference value) ÷ (Max. frequency)

Acceleration time 2 and deceleration time 2 are enabled by setting 11 for acceleration/deceleration time selection in any of the n36 through n39 parameters for multi-function input.

- Deceleration time 2 is also enabled by emergency-stop settings 19, 20, 21, and 22 in any of the n36, n37, n38, and n39 parameters for multi-function input with n04 for interruption mode selection set to 0 (i.e., deceleration stop).

n16	**Acceleration time 1**			**Changes during operation**	**Yes**
Setting range	0.0 to 999 (s)	Unit of setting	0.1 s (see note)	Default setting	10.0

n17	**Deceleration Time 1**			**Changes during operation**	**Yes**
Setting range	0.0 to 999 (s)	Unit of setting	0.1 s (see note)	Default setting	10.0

n18	**Acceleration Time 2**			**Changes during operation**	**Yes**
Setting range	0.0 to 999 (s)	Unit of setting	0.1 s (see note)	Default setting	10.0

n19	**Deceleration Time 2**			**Changes during operation**	**Yes**
Unit of setting	0.0 to 999 (s)	Unit of setting	0.1 s (see note)	Default setting	10.0

Note Values will be set in 0.1-Hz increments if the frequency is less than 100 Hz and 1-Hz increments if the frequency is 100 Hz or over.

S-shape Acceleration/Deceleration Characteristic (n20)

- Trapezoidal and S-shape acceleration and deceleration are available. Using the S-shape characteristic function for acceleration and deceleration can reduce shock to the machinery when stopping or starting.
- Any one of three S-shape acceleration/deceleration times (0.2, 0.5, and 1.0 s) is selectable.

n20	S-shape Acceleration/Deceleration Characteristic			Changes during operation	No
Setting range	0 to 3	Unit of setting	1	Default setting	0

Set Values

Value	Description
0	No S-shape acceleration/deceleration characteristic (Trapezoidal acceleration/deceleration)
1	S-shape acceleration/deceleration characteristic time is 0.2 s
2	S-shape acceleration/deceleration characteristic time is 0.5 s
3	S-shape acceleration/deceleration characteristic time is 1.0 s

Note When the S-shape acceleration/deceleration characteristic time is set, the acceleration and deceleration times will be lengthened according to the S-shape at the beginning and end of acceleration/deceleration.

5-7 Selecting the Reverse Rotation-prohibit

This parameter is used to specify whether to enable or disable the reverse rotation command sent to the Inverter from the control circuit terminals or Digital Operator. The parameter should be set to “not accept” when the Inverter is applied to systems that prohibit the reverse rotation of the Inverter.

Selecting the Reverse Rotation-prohibit (n05)

n05	Reverse Rotation-prohibit Selection			Changes during operation	No
Setting range	0, 1	Unit of setting	1	Default setting	0

Set Values

Value	Description
0	Accept
1	Not accept

5-8 Selecting the Interruption Mode

This parameter is used to specify the interruption mode when the STOP command is input.

The Inverter either decelerates or coasts to a stop according to the interruption mode selection.

Selecting the Interruption Mode (n04)

n04	Interruption Mode Selection			Changes during operation	No
Setting range	0, 1	Unit of setting	1	Default setting	0

Set Values

Value	Description
0	Frequency deceleration stop (See notes 1 and 2.)
1	Free running (See note 3.)

Note

1. The Inverter will decelerate to stop according to the setting in n17 for deceleration time 1 if any of the n36 through n39 parameters for multi-function input is not set to 11 for acceleration/deceleration time selection. If any one of the n36 through n39 multi-function input parameters is set to acceleration/deceleration time selection, the Inverter will decelerate to stop according to the selected setting of deceleration time when the STOP command is input.
2. If the RUN signal is input again during a deceleration stop, deceleration will be stopped at the point of the input and acceleration will proceed at that frequency.
3. Do not input a RUN signal during a free-running stop if the motor’s rotation speed is not sufficient slowed. If a RUN signal is input under these conditions, a main circuit overvoltage (OV) or overcurrent (OC) will be detected.
   To restart a free-running motor, set a speed search command in one of the multi-function inputs 1 to 4 (n36 to n39), use the speed search to detect the speed of the free running motor, and then accelerate smoothly.

5-9 Multi-function I/0

5-9-1 Multi-function Input

The J7AZ incorporates four multi-function input terminals (S2 through S5). Inputs into these terminals have a variety of functions according to the application.

Multi-function Input (n36 through n39)

n36	**Multi-function Input 1 (S2)**			**Changes during operation**	**No**
Setting range	2 to 8, 10 to 22 (see note)	Unit of setting	1	Default setting	2

n37	**Multi-function Input 2 (S3)**			**Changes during operation**	**No**
Setting range	0,2 to 8, 10 to 22 (see note)	Unit of setting	1	Default setting	5

n38	**Multi-function Input 3 (S4)**			**Changes during operation**	**No**
Setting range	2 to 8, 10 to 22 (see note)	Unit of setting	1	Default setting	3

n39	**Multi-function Input 4 (S5)**			**Changes during operation**	**No**
Setting range	2 to 8, 10 to 22, 34, 35 (see note)	Unit of setting	1	Default setting	6

Note Do not set values outside the above setting ranges.

Set Values

Value	Function	Description
0	Forward/Reverse rotation command	3-wire sequence (to be set in n37 only) By setting n37 to 0, the set value in n36 is ignored and the following setting are forcibly made. S1: RUN input (RUN when ON) S2: STOP input (STOP when OFF) S3: Forward/Reverse rotation command (OFF: Forward; ON: Reverse)
2	Reverse/Stop	Reverse rotation command (2-wire sequence)
3	External fault (NO)	ON: External fault (FP□detection: □is a terminal number)
4	External fault (NC)	OFF: External fault (EF□detection: □is a terminal number)
5	Fault reset	ON: Fault reset (disabled while RUN command is input)
6	Multi-step speed reference 1	Signals to select frequency references 2 through 8. **Note** Refer to *5-5-4 Setting Frequency References through Key Sequences* for the relationship between multi-step speed references and frequency references. **Note** Any multi-step speed reference not set is regarded as turned-OFF input.
7	Multi-step speed reference 2	
8	Multi-step speed reference 3	
10	Inching frequency command	ON: Inching frequency command (taking precedence over the multi-step speed reference)
11	Acceleration/Deceleration time selection	ON: Acceleration time 2 and deceleration time 2 are selected.
12	External base block command (NO)	ON: Output shut off (while motor coasting to a stop and “bb” flashing)
13	External base block command (NC)	OFF: Output shut off (with motor free running and “bb” flashing)
14	Search command (Searching starts from maximum frequency)	ON: Speed search (Searching starts from n09)
15	Search command (Searching starts from preset frequency)	ON: Speed search
16	Acceleration/Deceleration-prohibit command	ON: Acceleration/Deceleration is on hold (running at parameter frequency)
17	Local or remote selection	ON: Local mode (operated with the Digital Operator) **Note** After this setting is made, mode selection with the Digital Operator is not possible.
18	Communications or remote selection	ON: RS-422A/485 communications input is enabled. OFF: The settings of n02 and n03 are enabled.
19	Emergency stop fault (NO)	The Inverter stops according to the setting in n04 for interruption mode selection with the emergency stop input turned ON. n04 set to 0: Decelerates to stop at deceleration time 2 set in n19. n04 set to 1: Coasts to a stop. **Note** NO: Emergency stop with the contact closed NC: Emergency stop with the contact opened. **Note** Fault: Fault output is ON and reset with RESET input. Alarm output is ON (no reset required). **Note** “STP” is displayed (lit with fault input ON and flashes with alarm input ON)
20	Emergency stop alarm (NO)	
21	Emergency stop fault (NC)	
22	Emergency stop alarm (NC)	
34	Up or down command	Up or down command (set in n39 only) By setting n39 to 34, the set value in n38 is ignored and the following settings are forcibly made. S4: Up command S5: Down command **Note** It is impossible to set the up or down command and multi-step speed references 1 through 3 together. **Note** For up and down command functions in detail, refer to 6-7-7 UP/DOWN Command Frequency Memory (n62).
35	Self-diagnostic test	ON: RS-422A/485 communications self-diagnostic test (set in n39 only)

Operation in 2-wire Sequence (Set Value: 2)

- The Inverter operates in 2-wire sequence by setting a multi-function input parameter to 2 (reverse/stop).
- The following diagram shows a wiring example of the terminals in 2-wire sequence.

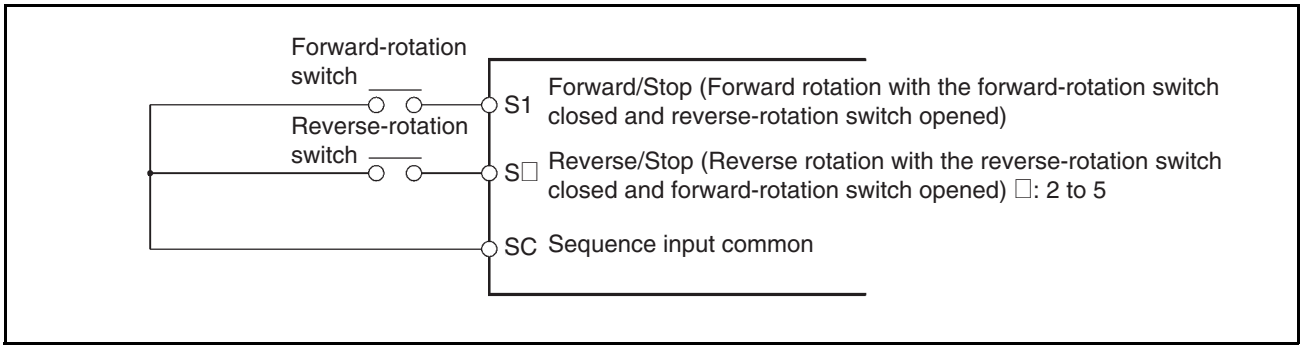

Operation in 3-wire Sequence (n37 = 0)

- The Inverter operates in 3-wire sequence by setting n37 for multi-function input 2 to 0.
- Only n37 can be set to 0 (3-wire sequence). By making this setting, the set value in n36 is ignored and the following settings are forcibly made.
  S1: RUN input (RUN when ON)
  S2: STOP input (STOP when OFF)
  S3: Forward/Reverse rotation command (OFF: Forward; ON: Reverse)
- The following diagram shows a wiring example of the terminals in 3-wire sequence.

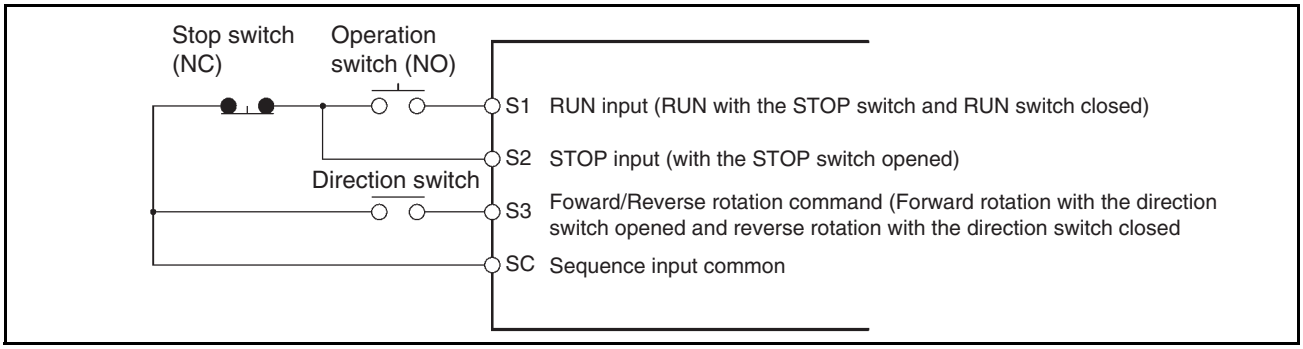

External Base Block Command (Set Value: 11, 12)

When an SPST-NO (setting: 12) or SPST-NC (setting: 13) input is received, Inverter outputs are shut OFF. Use these inputs in the following cases to stop Inverter outputs.

- For switching the motor to free running status when applying an external brake.
- For stopping Inverter outputs before disconnecting motor wiring when changing the motor connections from the Inverter to a commercial power supply.

Note The external base block only shuts OFF the Inverter's output frequency, and the Inverter's internal frequency continues to be calculated as usual. Therefore, if the external base block is clearedwhen the frequency is other than zero, the frequency calculated at that point will be output. Because of this, if the baseblock is cleared during deceleration while the motor is free running, a large discrepancy between the motor speed at that moment and the Inverter output frequency may result in a main circuit overvoltage (OV) or overcurrent (OC).

Speed Search (Set Value: 14, 15)

The speed search function is provided for smooth restarting without stopping a free running motor. Use it when switching the motor from commercial power supply operation to Inverter operation, when starting with the Inverter a motor turned by external force, etc.

The speed search function searches for the present motor frequency, from high frequency to low. When the motor's rotation speed is detected, it is accelerated from that frequency to the frequency reference according to the acceleration/deceleration time setting.

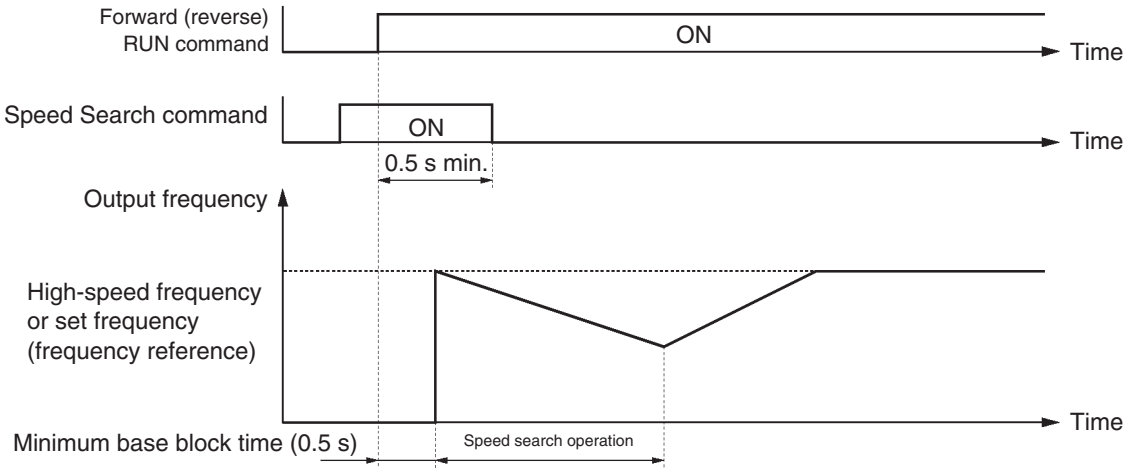

5-9-2 Multi-function Output

The J7AZ incorporates two multi-function output terminals (MA and MB). Output from these terminals has a variety of functions according to the application.

Selecting the Multi-function Output (n40)

n40	Multi-function Output (MA/MB and MC)			Changes during operation	No
Setting range	0 to 7, 10 to 17 (see note)	Unit of setting	1	Default setting	1

Note Do not set values outside the above setting ranges.

Set Values

Value	Function	Description
0	Fault output	ON: Fault output (with protective function working)
1	Operation in progress	ON: Operation in progress (with RUN command input or inverter output)
2	Frequency detection	ON: Frequency detection (with frequency reference coinciding with output frequency)
3	Idling	ON: Idling (at less than min. output frequency)
4	Frequency detection 1	ON: Output frequency ≥ frequency detection level (n58)
5	Frequency detection 2	ON: Output frequency ≤frequency detection level (n58)
6	Overtorque being monitored (NO-contact output)	Output if any of the following parameter conditions is satisfied. • Overtorque detection function selection (n59) • Overtorque detection level (n60)Overtorque detection level (n60) • Overtorque detection time (n61) **Note** NO contact: ON with overtorque being detected; NC contact: OFF with overtorque being detected
7	Overtorque being monitored (NC-contact output)	
10	Alarm output	ON: Alarm being detected (Nonfatal error being detected)
11	Base block in progress	ON: Base block in progress (in operation with output shutoff)
12	RUN mode	ON: Local mode (with the Digital Operator)
13	Inverter ready	ON: Inverter ready to operate (with no fault detected)
14	Fault retry	ON: Fault retry (Inverter resetting with fault retry (n48) not set to 0)
15	UV in progress	ON: Undervoltage being monitored (main circuit undervoltage UV or UV1 detected)
16	Rotating in reverse direction	ON: Rotating in reverse direction
17	Speed search in progress	ON: Speed search in progress

Note Use “operation in progress” (set value: 1) or “idling“ (set value: 3) setting for the timing for stopping the motor using a brake. To specify a precise stop timing, set “frequency detection 1” (set value: 4) or “frequency detection 2” (set value: 5), and set the frequency detection level (n58).

5-10 Analog Monitor Output

The J7AZ incorporates analog monitor output terminals AM and AC.
These terminals have analog monitor values of output frequency or current.

Setting the Analog Monitor Output (n44 and n45)

- The output frequency or current as a monitored item is set in n44.
- The analog output characteristics are set as an analog monitor output gain in n45.

n44	Analog Monitor Output			Changes during operation	No
Setting range	0, 1	Unit of setting	1	Default setting	0

Set Value

Value	Description
0	Output frequency (Reference: 10 V at max. frequency)
1	Output current (Reference: 10 V with rated output current)

n45	Analog Monitor Output Gain			Changes during operation	Yes
Setting range	0.00 to 2.00	Unit of setting	0.01	Default setting	1.00

Note

1. Set the multiplication ratio based on the set value in n44.
   For example, if an output of 5 V is desired at maximum frequency (with n44 set to 0), set n45 to 0.50.
2. The maximum output voltage of the analog monitor output terminals are 10 V.

CHAPTER 6
Advanced Operation

6-1 Setting the Carrier Frequency 70
6-2 DC Injection Braking Function 72
6-3 Stall Prevention Function 73
6-4 Overtorque Detection Function 76
6-5 Torque Compensation Function. 77
6-6 Slip Compensation Function 78
6-7 Other Functions 79
6-7-1 Motor Protection Characteristics (n33 and n34) 79
6-7-2 Cooling Fan Operation Function (n35) 80
6-7-3 Momentary Power Interruption Compensation (n47) 80
6-7-4 Fault Retry (n48) 81
6-7-5 Frequency Jump Function (n49 to n51) 82
6-7-6 Frequency Detection Function 83
6-7-7 UP/DOWN Command Frequency Memory (n62) 85
6-7-8 Error History (n78) 87

This chapter provides information on the use of advanced functions of the Inverter for operation. Refer to this chapter to use the various advanced functions, such as stall prevention, carrier frequency setting, overtorque detection, torque compensation, and slip compensation.

6-1 Setting the Carrier Frequency

The carrier frequency of the J7AZ can be fixed or varied in proportion to the output frequency.

n46	Carrier Frequency Selection			Changes during operation	No
Setting range	1 to 4, 7 to 9	Unit of setting	1	Default setting	(see note)

Note The default setting varies with the capacity of the Inverter model.

Set Values

Value	Description
1	2.5 kHz
2	5.0 kHz
3	7.5 kHz
4	10.0 kHz
7	2.5 kHz (12×): 12 times as high as output frequency (between 1.0 and 2.5 kHz)
8	2.5 kHz (24×): 24 times as high as output frequency (between 1.0 and 2.5 kHz)
9	2.5 kHz (36×): 36 times as high as output frequency (between 1.0 and 2.5 kHz)

- The default setting does not need any changes in normal operation.
- Change the default setting in the following cases.

  The wiring distance between the Inverter and motor is long:
  Set the Inverter to a lower carrier frequency.

  Reference carrier frequency: 10 kHz at a maximum wiring distance of 100 m and 5 kHz at a wiring distance exceeding 100 m.

  Excessive speed or torque dispersion at low speed:
  Set the carrier frequency to a lower value.

Note The carrier frequency changes as shown in the following graph with 7 through 9 set in n46.

Carrier Frequency (n46: 7 through 9)

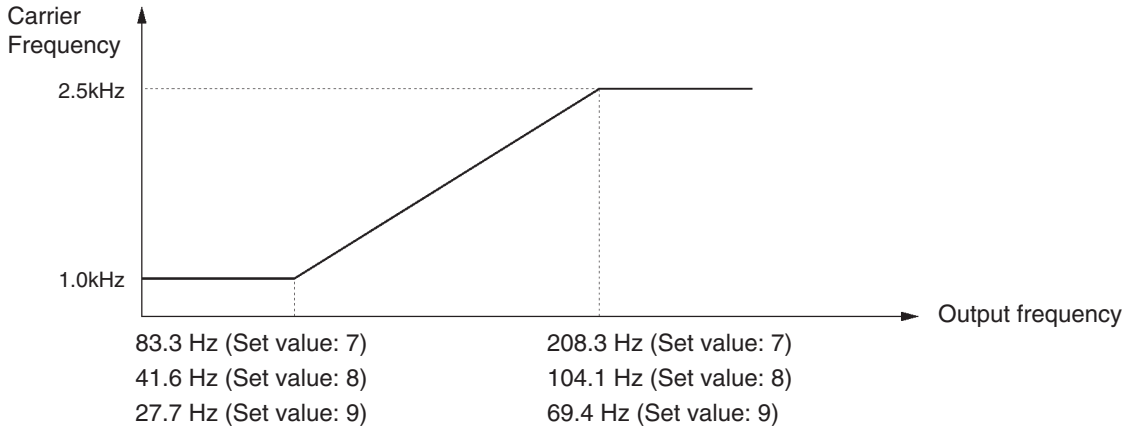

The Inverter cannot maintain rated output current with the carrier frequency set to a value higher than the default one.

The following table shows the default value and a decrease in the output current of each Inverter model.

Be sure to use the Inverter so that there will be no decrease in rated output current.

Voltage	Model CIMR-J7AZ-	Default setting	Rated output current (A)	Set to 3 Reduced rated output current (A)	Set to 4 Reduced rated output current (A)
3-phase 200 V	20P1	4 (10 kHz)	0.8	←	←
	20P2	4 (10 kHz)	1.6	←	←
	20P4	4 (10 kHz)	3.0	←	←
	20P7	4 (10 kHz)	5.0	←	←
	21P5	3 (7.5 kHz)	8.0	←	7.0
	22P2	3 (7.5 kHz)	11.0	←	10.0
	24P0	3 (7.5 kHz)	17.5	←	16.5
Single-phase 200 V	B0P1	4 (10 kHz)	0.8	←	←
	B0P2	4 (10 kHz)	1.6	←	←
	B0P4	4 (10 kHz)	3.0	←	←
	B0P7	4 (10 kHz)	5.0	←	←
	B1P5	3 (7.5 kHz)	8.0	←	7.0
3-phase 400 V	40P2	3 (7.5 kHz)	1.2	←	1.0
	40P4	3 (7.5 kHz)	1.8	←	1.6
	40P7	3 (7.5 kHz)	3.4	←	3.0
	41P5	3 (7.5 kHz)	4.8	←	4.0
	42P2	3 (7.5 kHz)	5.5	←	4.8
	44P0	3 (7.5 kHz)	8.6	←	7.6

n75	Low Carrier Frequency at Low Speed			Changes during operation	No
Setting range	0, 1	Unit of setting	1	Default setting	0

Set Values

Value	Description
0	Low carrier frequency at low speed disabled.
1	Low carrier frequency at low speed enabled.

- Normally set n75 to 0.
- When the output frequency is 5 Hz or higher and the output current rate is 110% or less, the carrier frequency will be automatically reduced to 2.5 kHz with n75 set to 1. If the load is heavy at low speed, the Inverter will withstand higher overcurrent by suppressing the heat radiation of the Inverter caused by the carrier frequency.
- This function is enabled with 2, 3, or 4 set in n46 for carrier frequency.

6-2 DC Injection Braking Function

The DC injection braking function applies DC on the induction motor for braking control.

Startup DC Injection Braking: This braking is used for stopping and starting the motor rotating by inertia with no regenerative processing.

DC Injection Braking to Stop: Adjust the stop DC injection braking time if the motor rotating does not decelerate to a stop in normal operation due to inertia from a heavy load. By increasing the DC injection braking time or DC injection braking current, the time required for stopping the motor is reduced.

n52	**DC Control Current**			**Changes during operation**	**No**
Setting range	0 to 100 (%)	Unit of setting	1%	Default setting	50

n53	**Interruption DC Control Time**			**Changes during operation**	**No**
Setting range	0.0 to 25.5 (s)	Unit of setting	0.1 s	Default setting	0.5

n54	**Startup DC Control Time**			**Changes during operation**	**No**
Setting range	0.0 to 25.5 (s)	Unit of setting	0.1s	Default setting	0.0

- Set the DC injection braking current as percentage based on the rated current of the Inverter as 100%.
- After the startup DC injection braking time is set, the Inverter starts up at minimum frequency on completion of the startup DC injection braking control of the Inverter.
- After the speed is reduced, the Inverter is switched to DC injection braking at minimum output frequency.

DC Injection Braking Control

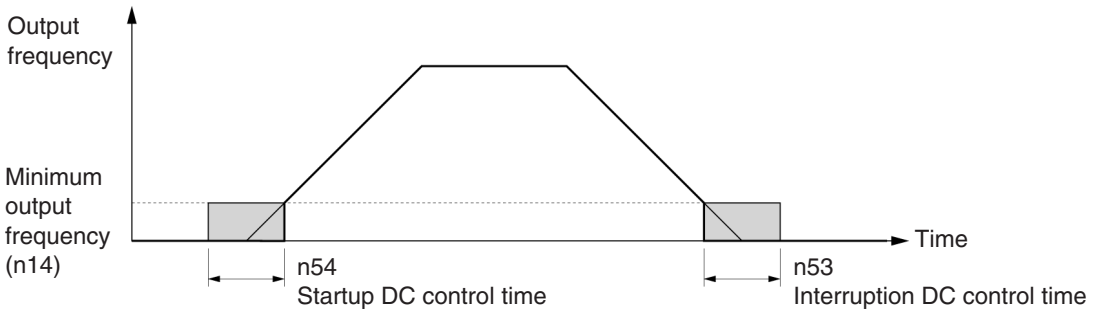

6-3 Stall Prevention Function

A stall will occur if the motor cannot keep up with the rotating magnetic field on the motor stator side when a large load is applied to the motor or a sudden acceleration/deceleration is performed.

In the J7AZ, stall prevention functions can be set independently for accelerating, running, and decelerating conditions.

n55	Stall Prevention Level during Deceleration			Changes during operation	No
Setting range	0, 1	Unit of setting	1	Default setting	0

Set Values

Value	Description
0	Stall prevention during deceleration
1	Stall prevention during deceleration

- If 1 is set, the motor will be decelerated according to the set deceleration time. If the deceleration time is too short, the main circuit may result in overvoltage.
- If 0 is set, the deceleration time will be automatically lengthened to prevent overvoltage.

Stall Prevention during Deceleration with n55 Set to 0

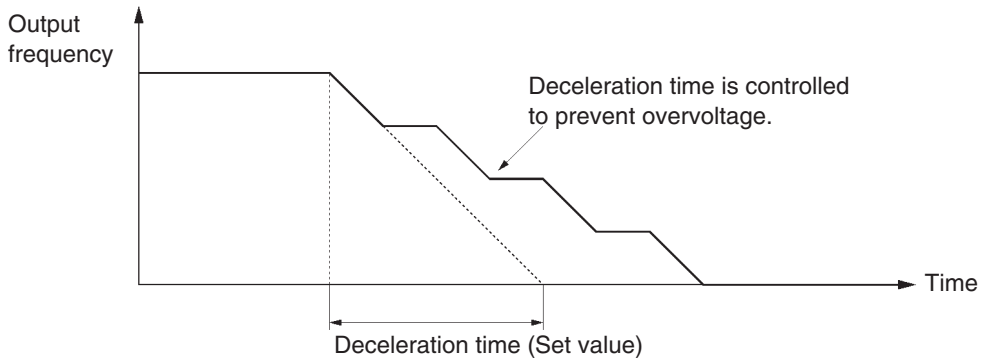

n56	Stall Prevention Level during Acceleration			Changes during operation	No
Setting range	30 to 200 (%)	Unit of setting	1%	Set Values	170

Set Values

- This function is used to stop accelerating the load if the output current exceeds the set current value so that the Inverter will continue operating without stalling. The Inverter accelerates the load while the output current is the same as or less than the set value.
- Set the parameter as percentage based on the rated Inverter current as 100%.
- The default setting does not need any changes in normal operation.
- Decrease the set value if the capacity of the motor is smaller than that of the Inverter or the motor stalls with the default value.
  The set value is normally 2 or 3 times higher than the rated current of the motor. Set this current as percentage based on the rated inverter current as 100%.

Stall Prevention during Acceleration

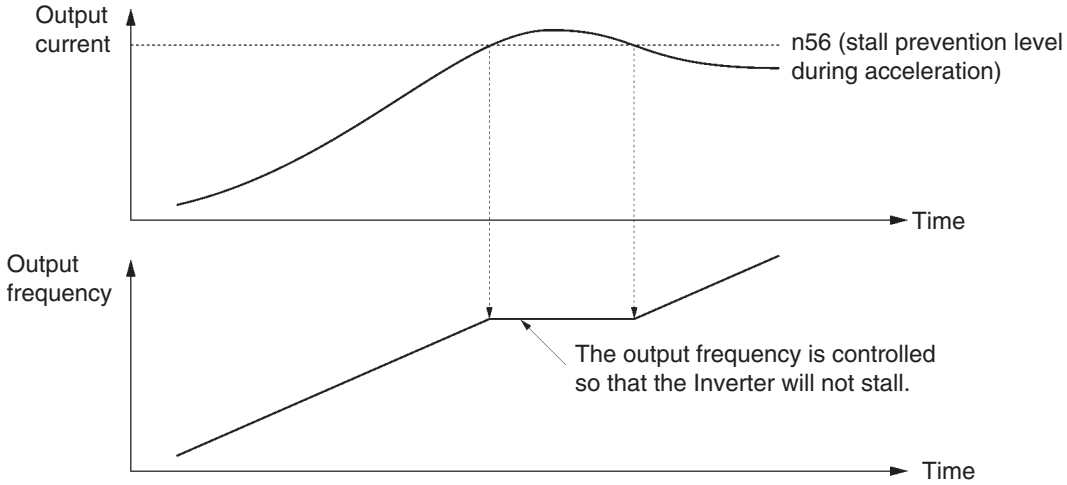

n57	Stall Prevention during Operation			Changes during operation	No
Setting range	30 to 200 (%)	Unit of setting	1%	Default setting	160

Set Values

- This function will decrease the output frequency if the output current exceeds the set current value by a minimum of approximately 100 ms so that the Inverter will continue operating without stalling. The Inverter will increase the output frequency to return to the set frequency reference level when the output current is less than the set value.
- The Inverter accelerates or decelerates the output frequency according to the preset acceleration or deceleration time. (Acceleration time 1: n16, n17 or acceleration time 2: n18, n19)
- Set the parameter as percentage based on the rated Inverter current as 100%.
- The default setting does not need any changes in normal operation.
- Decrease the set value if the capacity of the motor is smaller than that of the Inverter or the motor stalls with the default value.
  The set value is normally 2 or 3 times higher than the rated current of the motor. Set this current in percentage based on the rated Inverter current as 100%.

Stall Prevention during Acceleration

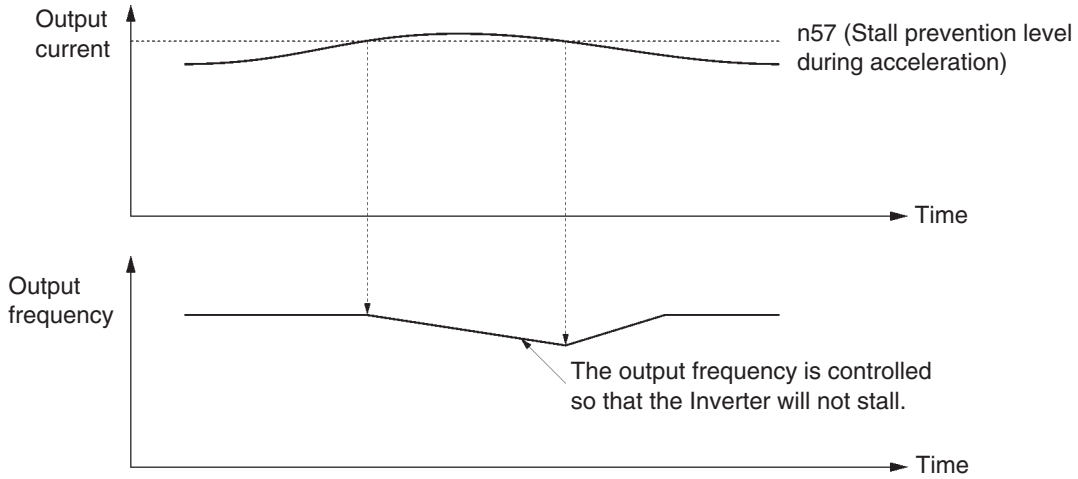

6-4 Overtorque Detection Function

When an excessive load is applied to the equipment, the Inverter detects the overtorque condition through an increase in the output current.

n59	Overtorque Detection Function Selection			Changes during operation	No
Setting range	0 to 4	Unit of setting	1	Default setting	0

Set Values

Value	Description
0	Inverter does not monitor overtorque.
1	Inverter monitors overtorque only when speed is matched. It continues operation (issues warning) even after overtorque is detected.
2	Inverter monitors overtorque only when speed is matched. It discontinues operation (through protective function) when overtorque is detected.
3	Inverter always monitors overtorque during operation. It continues operation (issues warning) even after overtorque is detected.
4	Inverter always monitors overtorque during operation. It discontinues operation (through protective function) when overtorque is detected.

- Set n60 for overtorque detection level and n61 for overtorque detection time to enable the overtorque detection function. The Inverter will detect overtorque when the current the same as or higher than the detection level is output for the preset detection time.
- Set n40 for multi-function output to either of the following so that external overtorque detection output will be ON.

  Set Value: 6 for overtorque detection (NO)

  Set Value: 7 for overtorque detection (NC)

Overtorque Detection

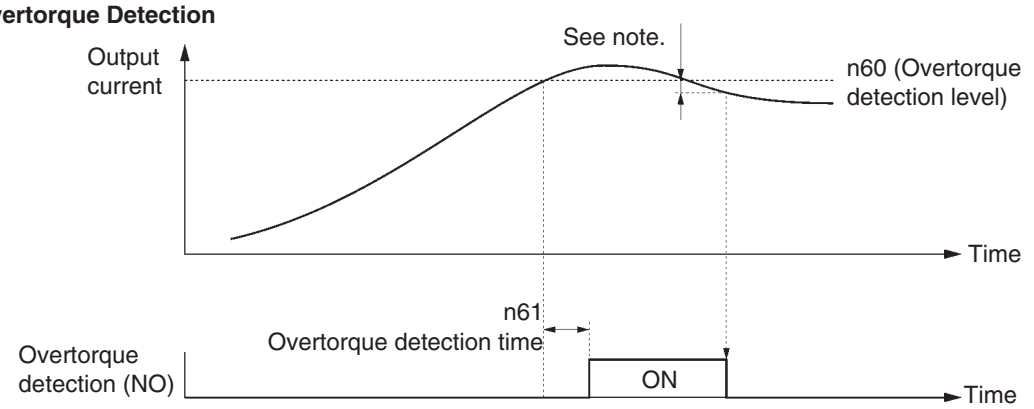

Note Overtorque detection will be canceled if the output current decreases from the detection level by approximately 5% of the Inverter rated current.

n60	Overtorque Detection Level			Changes during operation	No
Setting range	30 to 200 (%)	Unit of setting	1%	Default setting	160

Set Values

Set the parameter as percentage based on the rated Inverter current as 100%.

n61	Overtorque Detection Time			Changes during operation	No
Setting range	0.1 to 10.0 (s)	Unit of setting	0.1 s	Default setting	0.1

Set Values

- Set the overtorque detection time.
- The Inverter will detect overtorque when the current the same as or higher than the detection level is output for the preset detection time.

6-5 Torque Compensation Function

This function increases the output torque of the Inverter by detecting an increase in the motor load.

n63	Torque Compensation Gain			Changes during operation	Yes
Setting range	0.0 to 2.5	Unit of setting	0.1	Default setting	1.0

Set Values

- The default setting does not need any changes in normal operation.
- Change the default setting in the following cases.

  The wiring distance between the Inverter and motor is long:
  Set the gain to a larger value.

  The capacity of the motor is lower than the maximum applicable motor capacity of the Inverter:
  Set the gain to a larger value.

  The motor vibrates:
  Set the gain to a smaller value.
- The torque compensation gain must be adjusted so that the output current at low speed will not exceed 50% of the rated output current of the Inverter, otherwise the Inverter may be damaged.

6-6 Slip Compensation Function

The slip compensation function calculates the motor torque according to the output current, and sets gain to compensate for output frequency. This function is used to improve speed accuracy when operating with a load.

n64	Motor Rated Slip			Changes during operation	Yes
Setting range	0.0 to 20.0 (Hz)	Unit of setting	0.1 Hz	Default setting	(see note)

Note The default setting varies with the capacity of the Inverter model.

Set Values

- Set the rated slip value of the motor in use.
- This parameter is used as a slip compensation constant.
- Calculate the rated motor slip value from the rated frequency (Hz) and rpm on the motor nameplate by using the following formula.

$$\text{Rated slit value (Hz)} = \text{Rated frequency (Hz)} - \frac{\text{Rated prm} \quad \text{Number of poles}}{120}$$

n65	Motor No-load Current			Changes during operation	No
Setting range	0 to 99 (%)	Unit of setting	1%	Default setting	(see note)

Note The default setting varies with the capacity of the Inverter model.

Set Values

- Set the motor current with no load in percentage based on the rated motor current as 100%.
- Contact the motor manufacturer for the motor current with no load.
- This parameter is used as a slip compensation constant.

n66	Slip Compensation Gain			Changes during operation	Yes
Setting range	0.0 to 2.5	Unit of setting	0.1	Default setting	0.0 (see note)

Note This parameter is disabled with the value set to 0.0.

Set Values

- Set the parameter to 1.0 first and check the operation of the Inverter. Then fine-tune the gain with 0.1-gain increments or decrements.

  If the speed is lower than the target value, increase the set value.

  If the speed is higher than the target value, decrease the set value.

n67	Slip Compensation Time Constant			Changes during operation	No
Setting range	0.0 to 25.5 (s)	Unit of setting	0.1 s	Default setting	2.0

Set Values

- This parameter is used for the response adjustment of the slip compensation function.
- The default setting does not need any changes in normal operation.
- Change the default setting in the following cases.

  The motor vibrates: Set the value to a larger value.

  The motor response is low: Set the value to a smaller value.

6-7 Other Functions

The following description provides information on the other functions and parameter settings of the Inverter.

6-7-1 Motor Protection Characteristics (n33 and n34)

This parameter setting is for motor overload detection (OL1).

n33	Motor Protection Characteristic Selection			Changes during operation	No
Setting range	0 to 2	Unit of setting	1	Default setting	0

Set Values

Value	Description
0	Protection characteristics for general-purpose induction motors
1	Protection characteristics for Inverter-dedicated motors
2	No protection

- This parameter is used to set the electric thermal characteristics of the motor to be connected.
- Set the parameter according to the motor.
- If a single Inverter is connected to more than one motor, set the parameter to 2 for no protection. The parameter is also disabled by setting n32 for rated motor current to 0.0. To protect each motor from overload, be sure to take an appropriate measure such as the installation of a thermal relay.

n34	Motor Protection Time			Changes during operation	No
Setting range	1 to 60 (min)	Unit of setting	1 min	Default setting	8

Set Values

- This parameter is used to set the electronic thermal protection constant of motor overload detection OL1.
- The default setting does not need any changes in normal operation.
- To set the parameter according to the characteristics of the motor, confirm the thermal time constant with the motor manufacturer and set the parameter with some margin. In other words, set the value a little shorter than the thermal time constant.
- To detect motor overloading more quickly, reduce the set value, provided that it does not cause any application problems.

6-7-2 Cooling Fan Operation Function (n35)

This parameter is used to operate the cooling fan of the Inverter while the Inverter is turned on or only while the Inverter is in operation.

n35	Cooling Fan Operation Selection			Changes during operation	No
Setting range	0, 1	Unit of setting	1	Default setting	0

Set Values

Value	Description
0	The fan rotates only while the RUN command is input and for 1 minute after the Inverter stops operating.
1	The fan rotates while the Inverter is turned on.

- This parameter is available only if the Inverter incorporates a cooling fan.
- If the operation frequency of the Inverter is low, the life of the fan can be prolonged by setting the parameter to 0.

6-7-3 Momentary Power Interruption Compensation (n47)

The parameter specifies the processing that will be performed when a momentary power interruption occurs.

n47	Momentary Power Interruption Compensation			Changes during operation	No
Setting range	0 to 2	Unit of setting	1	Default setting	0

Set Values

Value	Description
0	Disabled. (An undervoltage fault will be detected when there is momentary power interruption for 15 ms or more.)
1	The Inverter will continue operating if power is restored within 0.5 s. (see note 1)
2	The Inverter will restart when power is restored. (see note 2)

Note

1. If the parameter is set to 1, an undervoltage warning will be detected and the output of the Inverter will be shut off for 0.5 s when a momentary power interruption occurs. The Inverter will restart after speed searching if power is restored within 0.5 s. Undervoltage fault 1 will be detected if power failure continues for more than 0.5 s.
2. If the parameter is set to 2, an undervoltage warning will be detected and the output of the Inverter will be shut off when a momentary power interruption occurs. The Inverter will then wait for power restoration. When power is restored, the Inverter will restart after speed searching.

6-7-4 Fault Retry (n48)

⚠ Caution

The Inverter may be break if the fault retry function is used.

If the Inverter breaks, take the following measures:
Be sure to install a no-fuse breaker (NFB).
Provide the Inverter and peripheral machines with a sequence so that the machines will stop operating when the Inverter has an operational fault.

- The fault retry function automatically resets and restarts the Inverter in the case the Inverter has an overvoltage fault, overcurrent fault, or ground fault.
- In the case of any other fault, the protective function operates instantly and the fault retry function does not operate.
- This function is to be used only if the user does not want to interrupt the mechanical system, even if this function may damage the Inverter.
- Set n40 for multi-function output to the following value so that external overtorque detection output will be turned on.

  Set value: 14 for fault retries

n48	Fault Retry			Changes during operation	No
Setting range	0 to 10	Unit of setting	1	Default setting	0

Set Values

- Set the number of fault retries required.
- The count of fault retries will be cleared in any of the following cases.

  The Inverter is normal for 10 minutes continuously after the latest fault retry was made.

  Power supply to the Inverter is interrupted.

  A fault reset is input.

6-7-5 Frequency Jump Function (n49 to n51)

- The frequency jump function prevents the Inverter from generating frequencies that make the mechanical system resonate.
- The frequency jump function can be used effectively to set two dead bands of a frequency reference.

n49	Jump Frequency 1			Changes during operation	No
Setting range	0.0 to 400 (Hz)	Unit of setting	0.1 Hz (see note)	Default setting	0.0

n50	Jump Frequency 2			Changes during operation	No
Setting range	0.0 to 400 (Hz)	Unit of setting	0.1 Hz (see note)	Unit of setting	0.0

n51	Jump Width			Changes during operation	No
Setting range	0.0 to 25.5 (Hz)	Unit of setting	0.1 Hz	Default setting	0.0

Note Values will be set in 0.1-Hz increments if the frequency is less than 100 Hz and 1-Hz increments if the frequency is 100 Hz or greater.

Set Values

- Set n49 and n50 for jump frequencies 1 and 2 to the central values of jumping frequencies.
- These values must satisfy the following condition.
  n49 ≥ n50
- The value in n51 must be set for the jump width.
- This function is disabled with n51 set to 0.0.
- The operation of the Inverter within the dead bands is prohibited. While the Inverter is in acceleration or deceleration control, however, the Inverter does not jump the bands but changes the frequency smoothly.

Frequency Jump Function

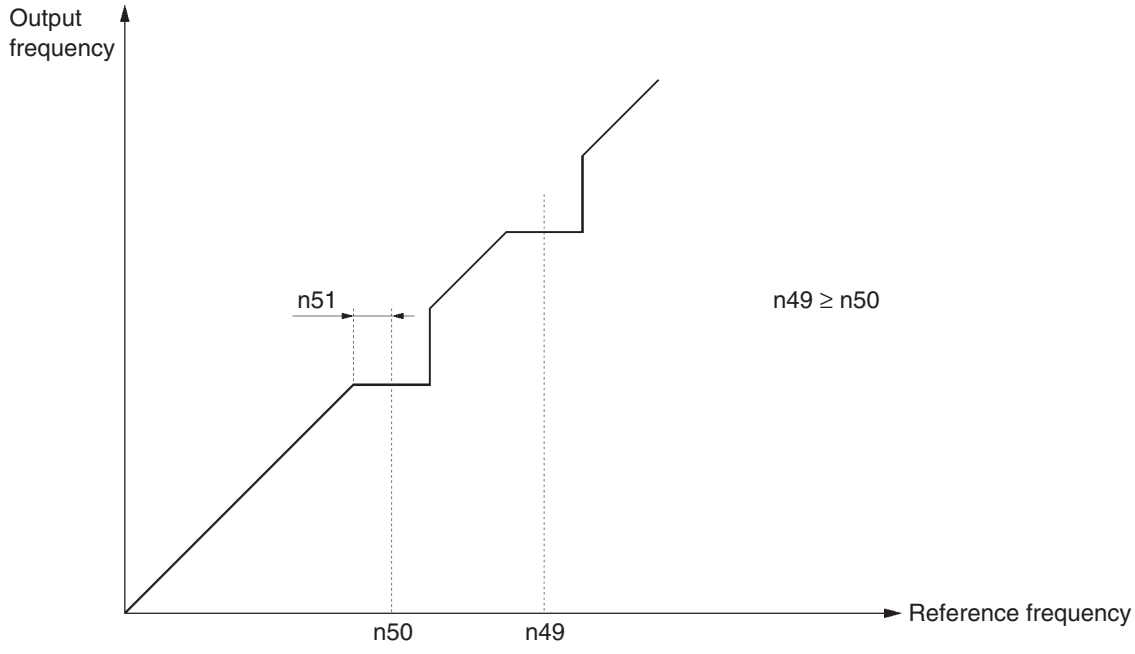

6-7-6 Frequency Detection Function

- The 3G3JV has the following frequency detection functions.

  Frequency Detection:
  Detects that the frequency reference coincides with the output frequency.

  Frequency Detection Levels 1 and 2:
  Detects that the output frequency is the same as or higher or lower than the set value (frequency detection level) in n58.
- The parameter n40 for multi-function output must be set for the frequency detection function.

Frequency Detection

The parameter n40 for multi-function output must be set for frequency detection output.

Set value: 2 for frequency detection

Frequency Detection Operation

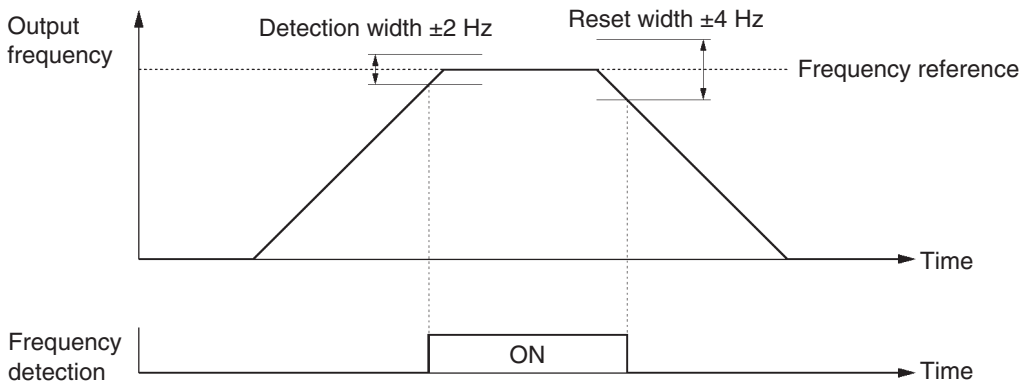

Frequency Detection Levels 1 and 2

- The parameter n40 for multi-function output must be set for frequency detection output.

  Set value: 4 for frequency detection level 1 (Output frequency ≥ n58)

  Set value: 5 for frequency detection level 2 (Output frequency ≤ n58)
- Set the frequency detection level in n58.

n58	Frequency Detection Level			Changes during operation	No
Setting range	0.0 to 400 (Hz)	Unit of setting	0.1 Hz (see note)	Default setting	0.0

Note The value will be set in 0.1-Hz increments if the frequency is less than 100 Hz and 1-Hz increments if the frequency is 100 Hz or over.

Frequency Detection Level 1

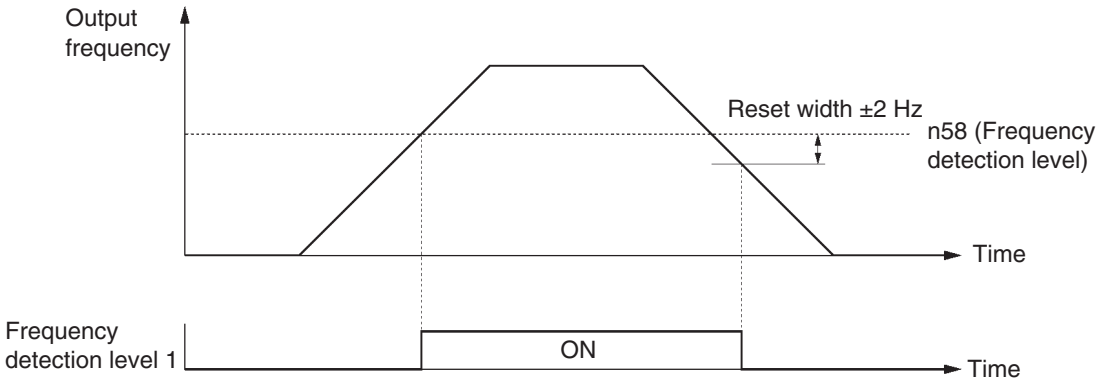

Frequency Detection Level 2

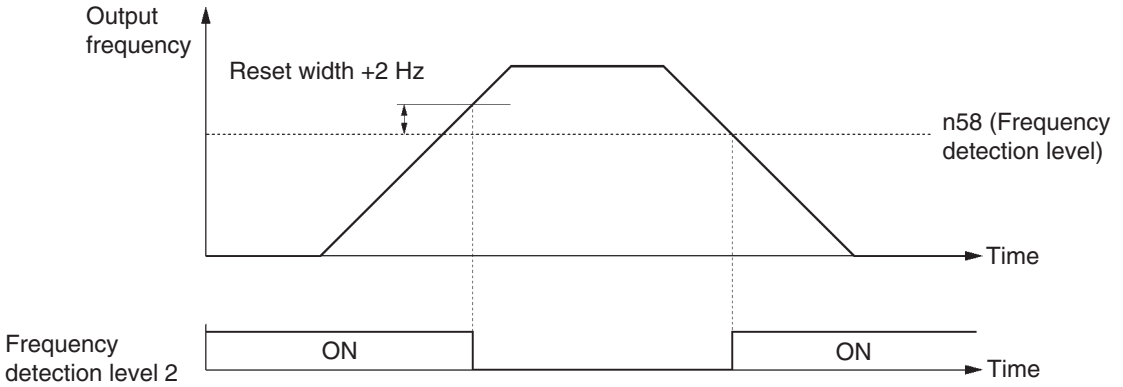

6-7-7 UP/DOWN Command Frequency Memory (n62)

- This function changes the reference frequency by turning the UP and DOWN commands on and off.
- In order to use this function, set n39 for multi-function inputs 4 to 34. Then the multi-function input 3 (S4) and multi-function input 4 (S5) terminals are set as described below.

  Multi-function input 3 (S4): UP command (The value in n38 for multi-function input 3 is ignored.)

  Multi-function input 4 (S5): DOWN command
- The output frequency held by the UP/DOWN function will be stored in the memory if n62 for UP/DOWN command frequency memory is set to 1.
- By setting n62 to 1, the frequency reference kept on hold for 5 s or more will be retained even after a power interruption, and operation will be restarted at this frequency the next time the RUN command is input.
- The stored output frequency will be cleared from the memory if n62 is set to 0. The retained frequency is initialized with n01 for parameter initialization set to 8 or 9.

Note While this function is used, frequency references can be used with the UP/DOWN command or inching frequency command. All multi-step speed references are disabled.

n62	**Frequency Hold Function Selector**			**Changes during operation**	**No**
Setting range	0, 1	Unit of setting	1	Default setting	0

Set Values

Value	Description
0	The frequency on hold is not retrained.
1	The frequency on hold for 5 s or more is retailed.

Operation of UP/DOWN Function

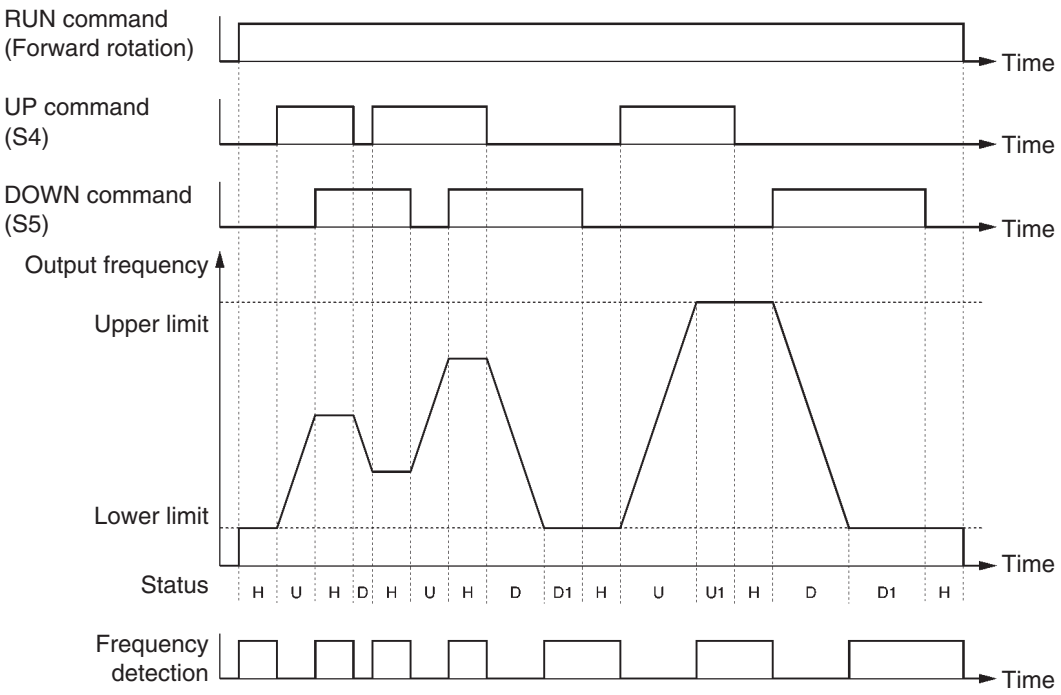

Note Status U: UP (acceleration)
D: DOWN (deceleration)
H: Hold
U1: Frequency acceleration restricted by upper limit.
D1: Frequency deceleration restricted by lower limit.

The following ON/OFF combinations of UP and DOWN commands are possible.

Command	Acceleration	Deceleration	Hold	Hold
S4 (UP command)	ON	OFF	OFF	ON
S5 (DOWN command)	OFF	ON	OFF	ON

With the UP/DOWN function used, the output frequency has the following restrictions for upper and lower limits.

Upper limit: The maximum frequency in n09 or the frequency reference upper limit in n30, whichever is smaller.

Lower limit: The minimum output frequency in n14 or frequency reference lower limit in n31, whichever is smaller.

- When the RUN command for forward or reverse rotation is input, the Inverter will start operating at the lower limit regardless of whether the UP/DOWN command is input or not.
- When the UP/DOWN function and inching frequency command are both assigned to multi-function inputs, an inching frequency command input will have the highest priority.
- If n62 for UP/DOWN command frequency memory is set to 1, the output frequency held by the UP/DOWN function for 5 s or more will be stored in the memory. The output frequency will be held by the UP/DOWN function when both UP and DOWN commands are ON or OFF together.

6-7-8 Error History (n78)

- The J7AZ stores information on the latest error.
- The information on the latest error recorded is displayed by pressing the Enter Key after n78 for error history is displayed.
- The details of the information are the same as that obtained from the multi-function monitor U09.

n78	**Error History**			**Changes during operation**	**---**
Setting range	---	Unit of setting	---	Default setting	---

Note The information is read only.

Display Example

· Fault display

uU 1

Fault code

· No error stored

– – –

To clear the error history, set n01 for parameter write-prohibit selection/parameter initialization to 6.

CHAPTER 7
Communications

7-1 RS-422/485 Communications Unit 90
7-1-1 Overview 90
7-1-2 External Dimensions 90
7-1-3 Names of Parts 91
7-1-4 Mouting Procedure 91
7-2 Inverter Settings 93
7-2-1 Setting the Communications Conditions 93
7-2-2 Operation Command Selection (n02) 96
7-2-3 Frequency Reference Input Selection (n03) 96
7-2-4 Setting the Multi-function Inputs (n36 to n39) 97
7-3 Message Communications Basic Format 98
7-4 DSR Message and Response 101
7-4-1 Data Read (Function Code: 03 Hex) 101
7-4-2 Data Write/Broadcast Data Write (Function Code: 10 Hex) 103
7-4-3 Loop-back Test (Function Code: 08 Hex) 106
7-5 Enter Command 108
7-6 Setting the Communications Data 109
7-7 Register Number Allocations in Detail 111
7-7-1 I/O Function 111
7-7-2 Monitor Functions 112
7-8 Communications Error Codes 115
7-9 Self-diagnostic Test 116

Using a SI-485/J7 (3G3JV-PSI485J) RS-422/485 Communications Unit allows J7AZ Inverters to participate in RS-422/485 serial communications. This makes Inverter control input, frequency reference input, monitoring of the Inverter's operating status, and reading and writing of parameter settings all possible via communications. Up to 32 Inverters can be connected to the Unit to enable easy creation of networks.

Note

1. The RS-422/485 communications used by J7AZ Inverters conforms to the MODBUS (a trademark of AEG Schneider Automation) communica-tions protocol. No other communications protocol can be used in the same network and only Inverters and related products can be used as Slaves.
2. The communications processing time with RS-422/485 communications for J7AZ Inverters is proportional to the number of Slaves. When performing Inverter control, consider the communications processing time, and restrict the number of Inverters connected according to the response times required.
3. The communications timeout time with RS-422/485 communications is fixed at 2 s (when communications timeouts are enabled). In the worst case, problems with the communications line may not be detected for up to 2 s. Design the application and overall system to ensure safety allowing for this.

7-1 RS-422/485 Communications Unit

7-1-1 Overview

- The SI-485/J7 (3G3JV-PSI485J) RS-422/485 Communications Unit is an Optional Unit for J7AZ Inverters.
- Mounting an RS-422/485 Communications Unit to a 3G3JV Inverter provides the Inverter with an RS-422/485 interface.

7-1-2 External Dimensions

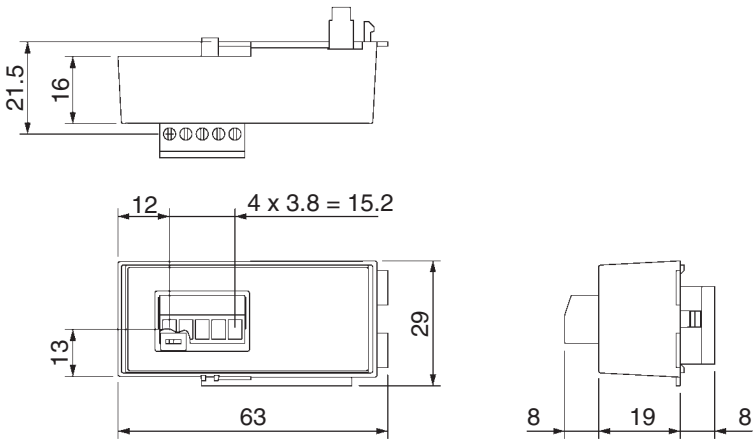

7-1-3 Names of Parts

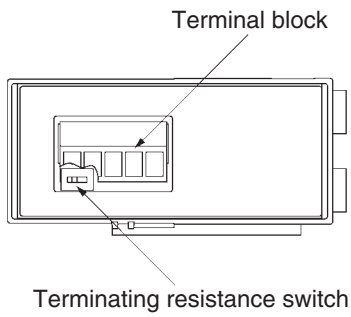

Terminal Block

1	2	3	4	5
S–	S+	Shield	R–	R+

Terminating Resistance Switch

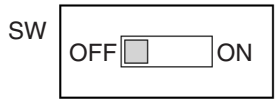

Note Set the terminating resistance switch to ON to connect the terminating resistance.

7-1-4 Mouting Procedure

Use the following procedure to mount an RS-422/485 Communications Unit SI-485/J7 (3G3JV-PSI485J) to a J7AZ Inverter.

1. Turn OFF the Inverter's power supply. Mounting the RS-422/485 Communications Unit without turning OFF the Inverter's power supply may result in electric shock or damage to equipment.
2. Loosen the Inverter's front cover mounting screws and remove the front cover as shown on the left below.
3. Remove the optional cover as shown on the right below.

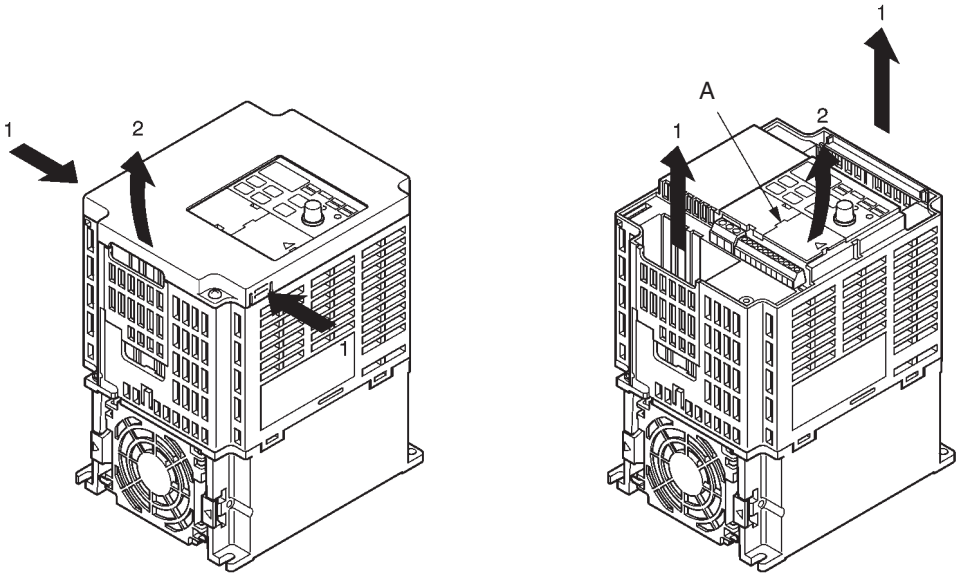

4. Align the Unit with the Inverter's connector, and push the Unit onto the Inverter (so that the 3 catches enter the corresponding holes) until it is securely mounted.

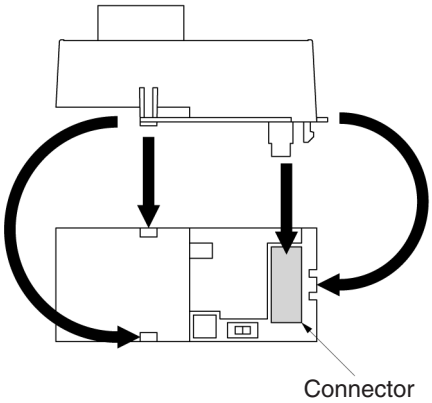

5. Mount the front cover (removed previously) on top of the RS-422/485 Communications Unit, and secure it using the front cover mounting screws. (Do not mount the optional cover.)

Note When not using the RS-422/485 Communications Unit, be sure to mount the optional cover. Not mounting the optional cover will leave charged parts exposed and may result in electric shock or damage to equipment.

7-2 Inverter Settings

7-2-1 Setting the Communications Conditions

Communications Time-over Detection Selection (n68)

- This parameter is used for monitoring the communications system.
- The set value in the parameter determines whether communications time-over detection will be performed with “CE” displayed if there is an interval of more than 2 s between normal communications. The method to process the detected communications time-over is also determined according to the set value in the parameter.
- When a control signal (the RUN command, forward/reverse rotation command, or an external fault signal) is input into the Inverter through communications, be sure to set n68 to 0, 1, or 2. Then the system will stop in the case of a time-over detection. If there is a communications failure, no control input will be operable. It will be, however, impossible to stop the Inverter if n68 is to 4 or 3. Use a host program that monitors how the Inverter handles all control input signals, for example, so that there will be no interval of more than 2 s between communications.

n68	**RS-422A/485 Communications Time-over Detection Selection**	**Register**	0144 Hex	**Changes during operation**	No
Setting range	0 to 4	**Unit of setting**	1	**Default setting**	0

Set Values

Value	Description
0	Detects a time-over and fatal error and coasts to a stop (See note 1.)
1	Detects a time-over and fatal error and decelerates to a stop in deceleration time 1 (See note 1.)
2	Detects a time-over and fatal error and decelerates to a stop in deceleration time 2 (See note 1.)
3	Detects a time-over and nonfatal error warning and continues operating. The warning is canceled when the communications return to normal. (See note 2.)
4	No time-over is detected.

Note 1. 1. The fatal error is canceled with error reset input.

2. The nonfatal error warning is canceled when the communications returns to normal.

Communications Frequency Reference/Display Unit Selection (n69)

- Set this parameter to the unit of frequency reference and frequency-related values to be set or monitored through communications.
- This unit is for communications use only and independent from the units of setting made through the Digital Operator.

n69	**RS-422A/485 Communications Frequency Reference/Display Unit Selection**	**Register**	0145 Hex	**Changes during operation**	No
Setting range	0 to 3	**Unit of setting**	1	**Default setting**	0

Set Values

Value	Description
0	0.1 Hz
1	0.01 Hz
2	Converted value based on 30,000 as max. frequency
3	0.1% (Max. frequency: 100%)

Note Communications data after the above conversion is hexadecimal.
For example, if the frequency is 60 Hz and the unit of setting is 0.01 Hz, the converted value is obtained as follows: 60/0.01 = 6000 = 1770 Hex

Slave Address (n70)

- Set this parameter to the Slave address (Slave unit number) for communications.
- If more than one Inverter is connected as a Slave, make sure that there will be no Slave address duplication.

n70	**RS-422A/485 Communications Slave Address**	**Register**	0146 Hex	**Changes during operation**	No
Setting range	00 to 32	**Unit of setting**	1	**Default setting**	0

Set Values

Value	Description
00	Only receives broadcast messages from the Master (See note.)
01 to 32	Slave address

Note Address 00 is for broadcast purposes only. Do not set the Slave to this address, otherwise the Slave will not communicate.

Communcations Baud Rate and Parity Selection (n71 and n72)

Set the baud rate and parity according to the communications conditions of the Master.

n71	**RS-422A/485 Baud Rate Selection**	**Register**	0147 Hex	**Changes during operation**	No
Setting range	0 to 3	**Unit of setting**	1	**Default setting**	2

Set Values

Value	Description
0	2,400 bps
1	4,800 bps
2	9,600 bps
3	19,200 bps

n72	**RS-422A/485 Parity Selection**	**Register**	0148 Hex	**Changes during operation**	No
Setting range	0 to 2	**Unit of setting**	1	**Default setting**	2

Set Values

Value	Description
0	Even
1	Odd
2	No parity

In normal serial communications, data is configured in single bytes, and messages are created by stringing together multiple bytes of data. The parity check described here sets the check for each byte of data. Set the parity check method that is required by the Master.

Note The entire message is checked by a separate check code called “CRC-16,” so the communications data will be checked even if no special parity check is performed.

Send Wait Time Setting (n73)

Set this parameter to an awaiting period for returning a response after the DSR (data-send-request) message is received from the Master.

n73	**RS-422A/485 Send Wait Time**	**Register**	0149 Hex	**Changes during operation**	No
Setting range	10 to 65 (ms)	**Unit of setting**	1 ms	**Default setting**	10

Set Values

When the DSR message is received from the Master, the Inverter must wait for a communications time of 24-bit length plus the set value in n73 before returning a response. Set this value according to the response time of the Master.

RTS Control Selection (n74)

- Select whether or not to enable the RTS (request-to-send) communications control function.
- This function can be disabled (i.e., set to “1”) only when a 1-to-1 Master/Slave configuration is used in RS-422A communications. When multiple Slaves are used for RS-422A, or whenever RS-485 communications are used, it is necessary to set “0” (enable RTS control).

n74	**RS-422A/485 RTS Control Selection**	**Register**	014A Hex	**Changes during operation**	No
Setting range	0, 1	**Unit of setting**	1	**Default setting**	0

Set Values

Value	Description
0	Enabled
1	Disabled (Available to 1-to-1 RS-422A communication only)

7-2-2 Operation Command Selection (n02)

- Select the method to input the RUN or STOP command into the Inverter.
- This parameter is enabled in remote mode only. The Inverter in local mode accepts the RUN command only through key sequences on the Digital Operator.

n02	**Operation Command Selection**	**Register**	0102 Hex	**Changes during operation**	No
Setting range	0 to 2	**Unit of setting**	1	**Default setting**	0

Set Values

Value	Description
0	The RUN Key and STOP/RESET Key on the Digital Operator are enabled.
1	Multi-function input terminals are enabled in 2- or 3-wire sequence.
2	RS-422A/485 communications are enabled.

Note

1. To input the RUN command through RS-422A/485 communications, set this parameter to 2. Then the RUN command only through RS-422A/485 communications will be enabled.
2. The RUN command can be input through RS-422A/485 with multi-function input settings as well. For details, refer to *7-2-4 Setting the Multi-function Inputs (n36 to n39)*.

7-2-3 Frequency Reference Input Selection (n03)

- Select the method to input the frequency reference into the Inverter in remote mode.
- Ten methods can be used to input the frequency reference in remote mode. Select the ideal method according to the application.

n03	**Frequency Reference Selection**	**Register**	0103 Hex	**Changes during operation**	No
Setting range	0 to 4, 6	**Unit of setting**	1	**Default setting**	0

Set Values

Value	Description
0	The FREQUENCY adjuster on the Digital Operator is enabled.
1	Frequency reference 1 (n21) is enabled.
2	Frequency reference control terminal for 0- to 10-V voltage input is enabled.
3	Frequency reference control terminal for 4- to 20-mA current input is enabled.
4	Frequency reference control terminal for 0- to 20-mA current input is enabled.
6	Frequency reference through communications is enabled.

Note

1. To input the frequency reference through RS-422A/485 communications, set this parameter to 6. Then the frequency reference only through RS-422A/485 communications will be enabled.
2. The frequency reference can be input through RS-422A/485 with multi-function input settings as well. For details, refer to *7-2-4 Setting the Multi-function Inputs (n36 to n39)*.
3. The setting of n03 is valid for frequency reference 1, and is not related to frequency references 2 to 8. Frequency references 2 to 8 are set in n22 to n28.

7-2-4 Setting the Multi-function Inputs (n36 to n39)

- In addition to the methods described above, the RUN command and frequency reference can be input through RS-422A/485 communications by setting the value 18 in any one of the parameters from n36 to n39 (multi-function input).
- Subsequently, the following operations are selectable in remote mode. None of these parameters, however, can be changed while the operation command is being input.

  When the function-set input terminal is OFF, the RUN command will be executed according to the setting in n02 (operation command selection) and the frequency reference will be executed according to the setting in n03 (frequency reference selection).

  When the function-set input terminal is ON, the Inverter will operate according to the RUN command and frequency reference through RS-422A/485 communications.

n36	**Multi-function input 1 (S2)**	**Register**	0124 Hex	**Changes during operation**	No
Setting range	2 to 8, 10 to 22	**Unit of setting**	1	**Default setting**	2

n37	**Multi-function input 2 (S3)**	**Register**	0125 Hex	**Changes during operation**	No
Setting range	0, 2 to 8, 10 to 22	**Unit of setting**	1	**Default setting**	5

n38	**Multi-function input 3 (S4)**	**Register**	0126 Hex	**Changes during operation**	No
Setting range	2 to 8, 10 to 22	**Unit of setting**	1	**Default setting**	3

n39	**Multi-function input 4 (S5)**	**Register**	0127 Hex	**Changes during operation**	No
Setting range	2 to 8, 10 to 22, 34, 35	**Unit of setting**	1	**Default setting**	6

7-3 Message Communications Basic Format

The following description provides information on the format of message data (DSR and response data).

Message communications of the Inverter conform to the MODBUS Communications Protocol, which does not require message start and end processing.

(The MODBUS Communications Protocol is a trademark of AEG Schneider Automation.)

Communications Format

- The following format is used for message data communications.
- Message data consists of a Slave address, function code, communications data, and error check block.

Message data (DSR message and response)	Slave address 1 byte	Function code 1 byte	Communications data	Error check block 2 bytes

Message Interval

- When the Inverter receives a DSR message from the Master, the Inverter waits for a period that is equivalent to 24 bits in length and a Send Wait Time set in n73. Then the Inverter will return a response. Set n73 according to the Master's processing time or the timing adjustment.
- When the Master issues the next message after receiving the response from the Inverter, the Master must wait for a 24-bit period plus another period of at least 10 ms.

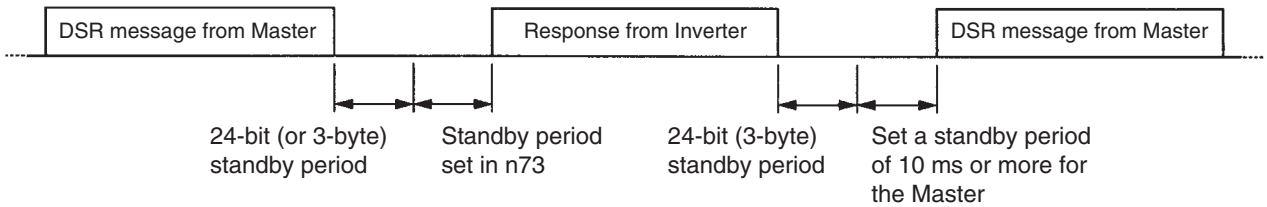

Message Data Configuration

- The communications message is configured entirely of hexadecimal data. (ASCII and FINS are not used.)
- Communications data is divided into the four areas shown in the following table.

Data name	Description
Slave address	Set the Slave address (the set value in n70) of the Inverter, to which the DSR message is sent. The Slave address must be within a range from 00 to 32 (00 to 20 Hex).
Function code	A command giving instructions of the details of processing to the Inverter. Example: Data read (03 Hex) and data write (10 Hex)
Communications data	Data attached to the command. Example: The register number of read start data and the number of registers of read data
Error check	CRC-16 check code for checking the reliability of the message data.

Note In the above communications, the default is –1 (65535) and the LSB (least-significant byte) is converted as MSB (most-significant byte) (in the opposite direction). The CRC-16 check is automatically performed by using the protocol macro function of OMRON's SYSMAC CS/CJ-series, C200HX/HG/HE, or CQM1H Programmable Controllers.

Slave Address

- The Master can communicate with a maximum of 32 Slaves over RS-422A/485. A unique Slave address is allocated to each Slave (Inverter) for communications.
- Slave addresses are within a range from 00 to 32 (00 through 20 Hex). If a DSR message is issued to Slave address 00, the message will be a broadcast message.

Note The broadcast message is addressed to all Slaves. Only the RUN command (register 0001 Hex) and frequency command (register 0002 Hex) can be written to the message. The Inverter receiving this message does not return a response regardless of whether or not the message is received properly. Therefore, for measures against communications errors, the monitor function of the Inverter should be used for checking the reception of broadcast messages.

Function Code

- The function code is a command giving instructions of the details of processing to the Inverter.
- The following three functions codes are available.

Function code	Command name	Description
03 Hex	Data read	Reads the data of the specified register number. Consecutive data of a maximum of 16 words (32 bytes) can be read.
08 Hex	Loop-back test	The DSR message is returned as a response. This command is used for checking the status of communications.
10 Hex	Data write	The attached data in the format is written to the specified register number. Consecutive data of a maximum of 16 words (32 bytes) can be written.

Note

1. Do not use any code other than the above, otherwise the Inverter will detect a communications error and return an error message.
2. The Inverter uses the same function code for the response. If an error occurs, however, the MSB of the function code will be set to 1. For example, if an error occurs in a DSR message with function code 03, the function code of the response will be 83.

Communications Data

Communications data is attached to the command. The contents and its arrangement of communications data vary with the function code. For details, refer to *7-4 DSR Message and Response*.

Error Check

The CRC-16 check code is the remainder (16 bits) when all of the message blocks from the Slave address to the final communications data are connected in series, as shown in the following diagram, and this data is divided by a fixed 17-digit binary number (1 1000 0000 0000 0101).

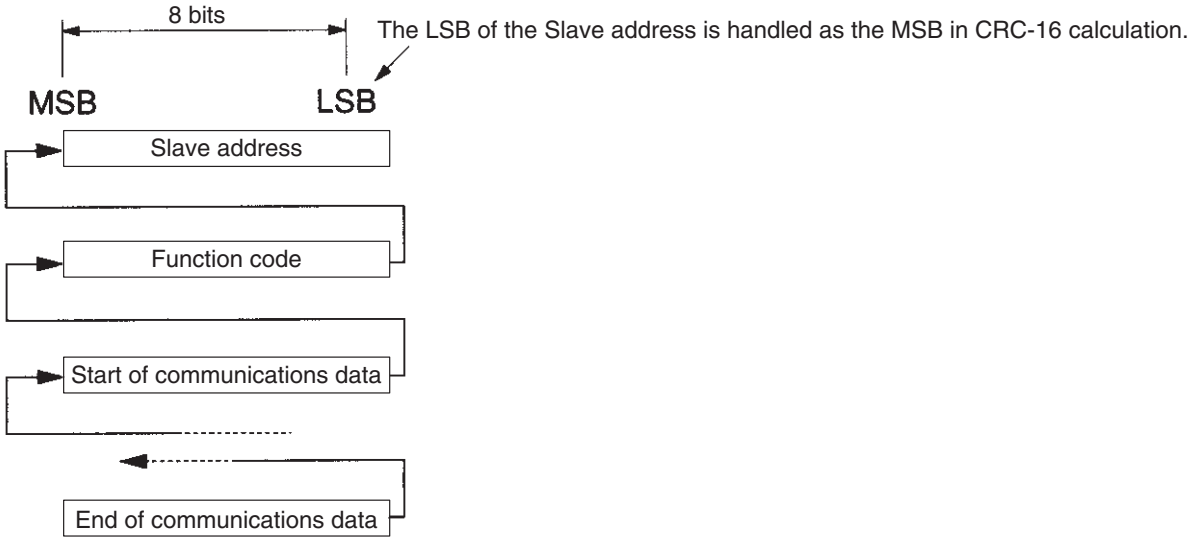

7-4 DSR Message and Response

The following description provides information on how to set DSR messages and what details are returned as responses. Each DSR message or response is divided into 8-bit blocks. Therefore, data must be set in 8-bit blocks for communications.

7-4-1 Data Read (Function Code: 03 Hex)

Settings and Responses

- To read data (such as control I/O status data, monitor item data, or parameter set value data) from the Inverter, issue the following DSR message.
- Data read is a maximum of 16 words in length (i.e., data of 32 bytes from 16 registers) per DSR message.
- A register number is allocated to each function item, such as control I/O, monitor item, and parameter functions. The register number of each parameter is indicated wherever the parameter is explained in this manual and in Section 10 List of Parameters. For register numbers other than those of parameters, refer to *7-7 Register Number Allocations in Detail*.

Note

1. A parameter corresponds to one register (one word), so the “number of registers of read data” indicates the number of parameters to be read (i.e., the number of consecutive registers beginning with the first register number).
1. The “number of bytes of attached data” indicates the number of bytes of data read from the registers attached from that point onwards. The number of registers must equal the number of bytes divided by two.

DSR Message

Byte No.	Data
1	Slave address
2	Function code (03 Hex)
3	Register No. of read start data
4	
5	Number of registers of read data (max. 16)
6	
7	CRC-16 check
8	

Response

Normal

Byte No.	Data	
1	Slave address	
2	Function code (03 Hex)	
3	Number of bytes of attached data	
4	Data of start register	MS B
5		LSB
6	Data of next register	MSB
7		LSB
8	Data of next register	MSB
9		LSB
:	:	:
n–1	CRC-16 check	
n		

Error

Byte No.	Data
1	Slave address
2	Function code (83 Hex)
3	Error code
4	CRC-16 check
5	

Note When an error occurs, the MSB of the function code will be set to 1.

Example of Data Read

In the following example, four-register data (status signal data) is read from register 0020 Hex of the Inverter with a Slave address of 02.

DSR Message

Byte No.	Data	Data example (Hex)
1	Slave address	02
2	Function code	03
3	Register No. of read start data	00
4		20
5	Number of registers of read data	00
6		04
7	CRC-16 check	45
8		F0

Response

Normal

Byte No.	Data		Data example (Hex)
1	Slave address		02
2	Function code		03
3	Number of bytes of attached data		08
4	Data in register No. 0020	MS B	00
5		LSB	65
6	Data in register No. 0021	MSB	00
7		LSB	00
8	Data in register No. 0022	MSB	00
9		LSB	00
10	Data in register No. 0023	MSB	01
11		LSB	F4
12	CRC-16 check		AF
13			82

Error

Byte No.	Data	Data example (Hex)
1	Slave address	02
2	Function code	83
3	Error code	03
4	CRC-16 check	F1
5		31

7-4-2 Data Write/Broadcast Data Write (Function Code: 10 Hex)

Settings and Response

- To write data to the Inverter, such as control I/O and parameter set value data, issue the following DSR message.
- Consecutive data of a maximum of 16 words (32 bytes for 16 registers) can be written per DSR message.
- The register number is allocated to each function item, such as control I/O and parameter functions. The register number of each parameter is indicated wherever the parameter is explained in this manual and in Section 10 List of Parameters. For register numbers other than those of parameters, refer to *7-7 Register Number Allocations in Detail*.

Note

1. A parameter corresponds to one register (one word), so the “number of registers of write data” indicates the number of parameters to be written (i.e., the number of consecutive registers beginning with the first register number).
2. The “number of bytes of attached data” indicates the number of bytes of data written to the registers attached from that point onwards. The number of registers must equal the number of bytes divided by two.

DSR Message

Byte No.	Data	
1	Slave address	
2	Function code (10 Hex)	
3	Register No. of write start data	
4		
5	Number of registers of write data (max. 16)	
6		
7	Data of start register	
8	Data of next register	MSB
9		LSB
10	Data of next register	MSB
11		LSB
12	Data of next register	MSB
13		LSB
:	:	:
n–1	CRC-16 check	
n		

Response

Normal

Byte No.	Data	
1	Slave address	
2	Function code (10 Hex)	
3	Register No. of write start data	MS B
4		LSB
5	Number of registers of write data	MSB
6		LSB
7	CRC-16 check	
8		

Error

Byte No.	Data
1	Slave address
2	Function code (90 Hex)
3	Error code
4	CRC-16 check
5	

Note

1. When an error occurs, the MSB of the function code will be set to 1.
2. A broadcast message uses the same DSR message format. The Slave address is, however, always set to 00 and only register 0001 Hex (the RUN command) and register number 0002 Hex (the frequency reference) can be written.

Example of Data Read

In the following example, two-register data (the RUN command) is written from register 0002 Hex of the Inverter with a Slave address of 01.

DSR Message

Byte No.	Data		Data example (Hex)
1	Slave address		01
2	Function code		10
3	Register No. of write start data		00
4			01
5	Number of registers of write data		00
6			02
7	Data of start register		04
8	Data in register No. 0001	MSB	00
9		LSB	01
10	Data in register No. 0002	MSB	02
11		LSB	58
12	CRC-16 check		63
13			39

Response

Normal

Byte No.	Data	Data example (Hex)
1	Slave address	01
2	Function code	10
3	Register No. of write start data	00
4		01
5	Number of registers of write data	00
6		02
7	CRC-16 check	10
8		08

Error

Byte No.	Data	Data example (Hex)
1	Slave address	01
2	Function code	90
3	Error code	02
4	CRC-16 check	DC
5		C1

7-4-3 Loop-back Test (Function Code: 08 Hex)

Settings and Response

- The DSR message from the Master is returned as a response. The Inverter does not retrieve or process this data.
- The DSR message or normal response for loop-back test use is divided into 8-byte blocks as shown below. Any data can be set as test data 1 or 2 provided that the number of data items remains changed.
- This command is used for checking the status of communications or for dummy communications without detecting any communications time-over.

DSR Message

Byte No.	Data
1	Slave address
2	Function code (08 Hex)
3	Test data 1
4	
5	Test data 2
6	
7	CRC-16 check
8	

Response

Normal

Byte No.	Data
1	Slave address
2	Function code (08 Hex)
3	Test data 1
4	
5	Test data 2
6	
7	CRC-16 check
8	

Error

Byte No.	Data
1	Slave address
2	Function code (88 Hex)
3	Error code
4	CRC-16 check
5	

Note When an error occurs, the MSB of the function code will be set to 1.

Example of Loop-back Test

In the following example, a loop-back test is conducted on the Inverter with a Slave address of 01.

DSR Message

Byte No.	Data	Data example (Hex)
1	Slave address	01
2	Function code	08
3	Test data 1	00
4		00
5	Test data 2	A5
6		37
7	CRC-16 check	DA
8		8D

Response

Normal

Byte No.	Data	Data example (Hex)
1	Slave address	01
2	Function code	08
3	Test data 1	00
4		00
5	Test data 2	A5
6		37
7	CRC-16 check	DA
8		8D

Error

Byte No.	Data	Data example (Hex)
1	Slave address	01
2	Function code	88
3	Error code	01
4	CRC-16 check	86
5		50

7-5 Enter Command

The Enter command is used for copying parameter set values that have been written through communications in and after register 0101 Hex of the RAM area to the EEPROM of the Inverter. This is done so that the EEPROM can maintain the parameter set values.

By issuing a DSR message to write data, the data is written to the RAM area of the Inverter. This data will be lost when the Inverter is turned OFF. Issue the Enter command to store in the EEPROM of the Inverter the parameter set value that has been written through communications.

Note The Enter command is not accepted while the Inverter is running. Be sure to issue the Enter command while the Inverter is not running.

DSR Message of Enter Command

- The Enter command is issued in response to the DSR message (with a function code of 10 Hex) to write data.
- By writing data 0000 Hex to be sent to register 0900 Hex, the Inverter copies to the EEPROM all parameter set values that the Inverter has received.

Note

1. Only the parameter constants (in and after register 0101 Hex) are stored in the EEPROM with the Enter command.
   The RUN command (in register No. 0001 Hex) is in the RAM area. The frequency reference (in register 0002 Hex) or any other data in registers with a number up to 003D Hex is also in the RAM area. Therefore, the EEPROM does not store these parameters.
2. Data can be written to the EEPROM a maximum of approximately 100,000 times. Therefore, be sure to reduce the number of Enter commands sent as much as possible.

7-6 Setting the Communications Data

The following description provides information on how to convert the register data (such as monitor value or parameter set value data) in the communications data block of the message data (such as DSR and response data).

Converting the Register Data

- The data in each register is sent as 2-byte data.
- The data in each register is processed under the following rules and sent in hexadecimal.

The data is converted to a hexadecimal value based on the minimum unit of setting of each register as 1.

If the frequency reference is 60 Hz and the minimum unit of setting will be 0.01 Hz, the data will be converted as follows:

60 (Hz)/0.01 (Hz) = 6000 = 1770 Hex

Note

1. The minimum unit of setting of each parameter is indicated whenever the parameter is explained in Section 10 List of Parameters. For registers other than those of parameters, refer to *7-7 Register Number Allocations in Detail*.
2. The minimum unit of setting of frequency reference data or frequency monitor data is determined by n69 (register 0145 Hex: RS-422A/485 communications frequency reference/monitor unit selection). The unit of setting of each of the three registers below is determined by the set value in n69. For the units of setting of these constants, refer to the List of Parameters. The set value in n69 has nothing to do with frequency data items set as parameter constants (e.g., frequency references 1 through 8, inching frequency reference, maximum frequency, minimum output frequency, jump frequency).
   - **Monitor Items**

     Register 0023: Frequency reference monitor
     Register 0024: Output frequency monitor
   - **Communications-dedicated Register**

     Register 0002: Frequency reference

     In spite of the set value in n69, however, set the maximum frequency to 3000 when the frequency reference is executed with a broadcast message. In this case, the Inverter rounds off any value less than 0.01 Hz.
3. There are parameters that make setting unit changes when the values are increased with the Digital Operator. The smaller units are, however, used for communications in such cases. For example, the value in n49 (register 0131 Hex: jump frequency 1) will be set in 0.01-Hz increments if the frequency is less than 100 Hz and 0.1-Hz increments if the frequency is 100 Hz or over. The value 0.01 Hz is always 1 Hex for communications.

If the jump frequency is 100.0 Hz, the minimum unit of setting will be 0.01 Hz and the data will be converted as follows:

100.0 (Hz)/0.01 (Hz) = 10000 = 2710 Hex

Negative Values Expressed in 2's Complements

If the frequency reference bias in n42 is –100%, the minimum unit of setting will be 1% and the data will be converted as follows:

100 (%)/1 (%) = 100 = 0064 Hex

→ 2's complement: FF9C Hex

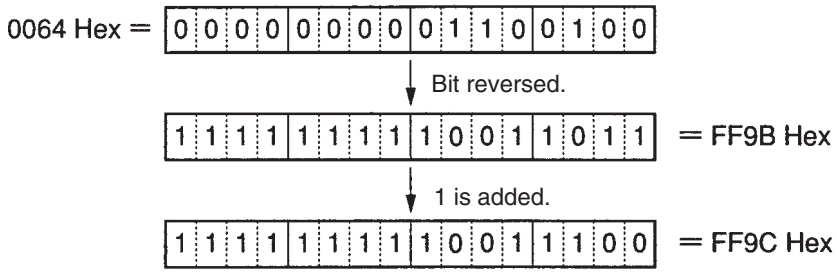

Note Whether the data is positive or negative is determined by the parameter set value. The MSB of negative-value data is always set to 1. Data with its MSB set to 1 is not, however, always negative-value data.

Setting All Unused Bits to 0

Bits 9 through 15 of the RUN command (register 0001 Hex) are unused. When writing the data, be sure to set all of these bits to 0. These bits when read are set to 0.

No Data Settings in Unused Registers

Registers described "not used" may be used for internal processing. Do not write any data to such registers.

7-7 Register Number Allocations in Detail

The following description provides information on register numbers allocated to the Inverter and the meanings of the registers. As for the register numbers of the parameters (n01 through n79), refer to Section 10 List of Parameters and the description of each of these parameters wherever explained in this manual.

7-7-1 I/O Function

Communications with a Single Slave with Addresses 01 to 32 (01 to 20 Hex)

Read/Write

Register No. (Hex)	Function	Description
0000	Not used.	---
0001	RUN command	Refer to the table below.
0002	Frequency reference	Set the frequency reference in the unit according to the set value in n69.
0003	V/f gain	Set on condition that 100% is 1000 within a range from 2.0 to 200.0% (20 to 2000). (See note 1.)
0004 to 0008	Not used.	---
0009	Inverter output	Refer to the table below.
000A to 000F	Not used.	---

Note
1. The V/f gain is a rate to be multiplied by the output voltage obtained from V/f operation. If 1000 (03E8 Hex) is set, the multiplication rate will be 1.
2. When the above registers are read, values that are set through communications will be read. For example, when the RUN command (register 0001) is read, the control input in the register that was previously set through communications will be returned. This is not a value monitored through the input signal terminal. To monitor the actual status of the Inverter, use the monitor functions (refer to *7-7-2 Monitor Functions*.

RUN Command (Register 0001 Hex)

Bit No.	Function
0	RUN command (1: RUN)
1	Forward/Reverse (1: Reverse)
2	External fault (External fault EF0)
3	Fault reset (1: Fault reset)
4	Not used.
5	Multi-function input 1 (1: ON)
6	Multi-function input 2 (1: ON)
7	Multi-function input 3 (1: ON)
8	Multi-function input 4 (1: ON)
9 to 15	Not used.

Note There is an OR relationship between input from the control terminals and input through communications, except for the RUN command and forward/reverse rotation command.

Inverter Output (Register 0009 Hex)

Bit No.	Function
0	Multi-function contact output (1: ON)
1 to 15	Not used.

Note The settings will be enabled if multi-function output n40 is set to 18 for communications output. Then the output terminals (MA to MC) will be turned ON and OFF through communications.

Broadcast Message with Slave Address: 00 (00 Hex) Write

Register No. (Hex)	Function	Description
0000	Not used.	---
0001	RUN command	Refer to the table below.
0002	Frequency reference	Set the frequency reference based on the maximum frequency as 30,000.
0003 to 000F	Not used.	---

Note
1. Data can be written to registers 0001 and 0002 only. Assumed previous values are held for unused registers.
2. No data can be written to multi-function input.
3. The unit of setting of the broadcast message is different from that in the DSR message to communicate with a single Slave.

RUN Command (Register 0001 Hex)

Bit No.	Function
0	RUN command (1: RUN)
1	Forward/Reverse (1: Reverse)
2 to 3	Not used.
4	External fault (1: External fault EF0)
5	Fault reset (1: Fault reset)
4 to 15	Not used.

7-7-2 Monitor Functions

Register No. (Hex)	Function	Description
0020	Status signal	Refer to the following corresponding table.
0021	Fault status	Refer to the following corresponding table.
0022	Data link status	Refer to the following corresponding table.
0023	Frequency reference	According to the set value in n69.
0024	Output frequency	According to the set value in n69.
0025 to 0026	Not used.	---
0027	Output current	Read based on 1 A as 10.
0028	Output voltage	Read based on 1 V as 1.
0029 to 002A	Not used.	---
002B	Input terminal status	Refer to the following corresponding table.
002C	Inverter status 1	Refer to the following corresponding table.
002D	Output terminal status	Refer to the following corresponding table.
002E to 0030	Not used.	---
0031	Main circuit DC voltage	Read based on 1 V as 1.
0032 to 003C	Not used.	---
003D	Communications error	Refer to the following corresponding table.
003E to 00FF	Not used.	---

Status Signal (Register 0020 Hex)

Bit No.	Function
0	During RUN (1: During RUN)
1	Forward/reverse operation (1: Reverse operation)
2	Inverter ready (1: Ready)
3	Fault (1: Fault)
4	Data setting error (1: Error)
5	Multi-function output (1: ON)
6 to 15	Not used.

Fault Status (Register 0021 Hex)

Bit No.	Function
0	OC
1	OV
2	OL2
3	OH
4	Not used.
5	Not used.
6	Not used.
7	EF□, STP

Bit No.	Function
8	F□
9	OL1
10	OL3
11	Not used.
12	UV1
13	GF
14	CE
15	Not used.

Note When a fault results, the corresponding bit will be set to 1.

Data Link Status (Register 0022 Hex)

Bit No.	Function
0	Data writing (1: Writing)
1 to 2	Not used.
3	Upper and lower limit error (1: Error): Outside set range
4	Verify error (1: Error): Same as OPE□.
5 to 15	Not used.

Input Terminal Status (Register 002B Hex)

Bit No.	Function
0	Forward/stop terminal (S1) (1: ON)
1	Multi-function input terminal 1 (S2) (1: ON)
2	Multi-function input terminal 2 (S3) (1: ON)
3	Multi-function input terminal 3 (S1) (4: ON)
4	Multi-function input terminal 4 (S5) (1: ON)
5 to 15	Not used.

Inverter Status 1 (Register 002C Hex)

Bit No.	Function
0	During RUN (1: During RUN)
1	Zero speed (1: Zero speed)
2	Frequency agree (1: Frequency agree)
3	Warning (Nonfatal error) (1: Warning)
4	Frequency detection 1 (1: Output frequency ≤n58)
5	Frequency detection 2 (1: Output frequency ≥n58)
6	Inverter ready (1: Ready)
7	UV (1: UV)
8	Base block (1: Base block)
9	Frequency reference mode (1: Other than communications)
10	RUN command mode (1: Other than communications)
11	Overtorque detection (1: Overtorque detection)
12	Not used.
13	Fault retry (1: Fault retry)
14	Fault (1: Fault)
15	Communications time-over: No normal communications for 2 s or more (1: Communications time-over detecting)

Output Terminal Status (Register 002D Hex)

Bit No.	Function
0	Multi-function contact output terminal MA (1: ON)
1 to 15	Not used.

Communications Error (Register 003D Hex)

Bit No.	Function
0	CRC error (1: Error)
1	Data length error (1: Error)
2	Not used.
3	Parity error (1: Error)
4	Overrun error (1: Error)
5	Framing error (1: Error)
6	Communications time-over (1: Error)
7 to 15	Not used.

7-8 Communications Error Codes

The Inverter will detect a communications error if normal communications fail or a message data error occurs.

The Inverter returns a response that consists of the Slave address, function code with the MSB set to 1, error code, and CRC-16 check block when the communications error is detected.

When the Master receives an error code, refer to the following table for troubleshooting and remedying the error.

Errors and Remedies

Error code	Name	Probable cause	Remedy
01 Hex	Function code error	The function code is set to a code other than 03, 08, or 10 Hex.	Check and correct the function code.
02 Hex	Register number error	The specified register number has not been registered.	Check and correct the register number.
		An attempt was made to read the register of the Enter command.	
03 Hex	Data number error	The number of write or read registers is not within a range from 1 to 16 (0001 and 0010 Hex).	Check and correct the number of registers or the number of bytes.
		The number of registers of the DSR message multiplied by two does not coincide with the number of bytes of the attached data.	
21 Hex	Data setting error	The write data is not within the permissible range.	Check the display on the Digital Operator and correct the data.
		The data set is illegal and causes an OPE (OPE1 through OPE9) error.	
22 Hex	Write mode error	The Inverter in operation received a DSR message to write data to a parameter that prohibits any data to be written while the Inverter is running.	Write the data after stopping the Inverter.
		The Enter command was received while the Inverter is running.	
		The Inverter detecting UV received a DSR message to write data.	Write the data after restoring the UV (main circuit (main circuit undervoltage) status.
		The Inverter detecting UV received the Enter command.	
		The Inverter detecting F04 for an initialization memory fault received a DSR message other than that for parameter initialization (with n01 set to 8 or 9).	Turn the Inverter OFF and ON after parameter initialization with n01 set to 8 or 9.
		The Inverter processing data written received a DSR message to write data.	Wait for an elapse period equivalent to 24 bits plus a minimum of 10 ms to issue the message after a response is received from the Inverter.
		A DSR message to a read-only register was received.	Check and correct the register number.

7-9 Self-diagnostic Test

The Inverter incorporates a self-diagnostic test function that checks whether RS-422A/485 communications are functioning. If the Inverter has a communications failure, take the steps provided below to check whether the communications function of the Inverter is normal.

Self-diagnostic Test Steps

1. **Set the Parameter**

   Set n39 for multi-function input 4 (S5) to 35 through the Digital Operator.

2. **Turn OFF the Inverter and Wire the Terminal**

   Turn OFF the Inverter and wire the following control terminals. At this time, make sure that all other circuit terminals are open.

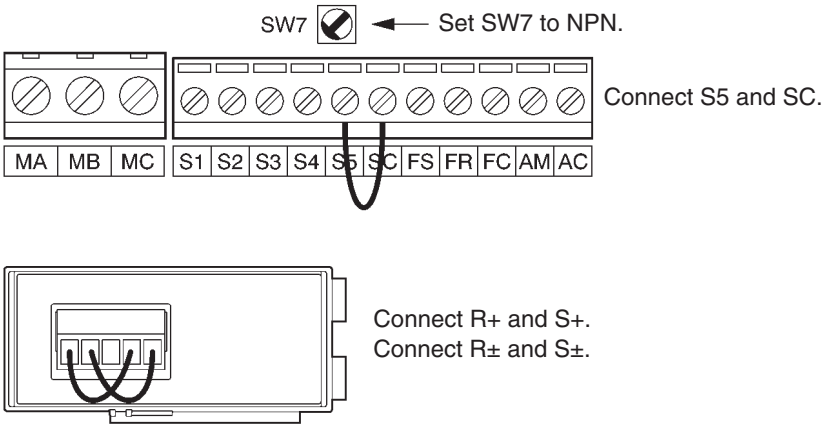

3. **Turn ON the Inverter and Check the Display**

   Turn ON the Inverter.
   Check the display on the Digital Operator.

   Normal

   The display is normal with no error code displayed.

   Fault

   The display shows “CE” (communications time-over) or “CAL” (communications standby). In either case, the communications circuit of the Inverter is broken. Replace the Inverter.

CHAPTER 8
Communications

8-1 Protective and Diagnostic Functions 118
8-1-1 Fault Detection (Fatal Error) 118
8-1-2 Warning Detection (Nonfatal Error) 121
8-2 Troubleshooting 123
8-2-1 Parameters Fail Set 123
8-2-2 Motor Fails to Operate 123
8-2-3 Motor Rotates in the Wrong Direction 124
8-2-4 Motor Outputs No Torque or Acceleration is Slow 125
8-2-5 Motor Deceleration is Slow. 125
8-2-6 Motor Burns 125
8-2-7 Controller or AM Radio Receives Noise when Inverter is Started . . 126
8-2-8 Ground Fault Interrupter is Actuated when Inverter is Started 126
8-2-9 Mechanical Vibration 126
8-2-10 Motor Rotates after Output of Inverter is Turned Off. 127
8-2-11 Detects OV when Motor Starts and Motor Stalls 127
8-2-12 Output Frequency Does Not Reach Frequency Reference 127
8-2-13 Inverter Does Not Run 127
8-3 Maintenance and Inspection 128

8-1 Protective and Diagnostic Functions

8-1-1 Fault Detection (Fatal Error)

The Inverter will detect the following faults if the Inverter or motor burns or the internal circuitry of the Inverter malfunctions. When the Inverter detects a fault, the fault code will be displayed on the Digital Operator, the fault contact output will operate, and the Inverter output will be shut off causing the motor to coast to a stop. The stopping method can be selected for some faults, and the selected stopping method will be used with these faults. If a fault has occurred, refer to the following table to identify and correct the cause of the fault. Use one of the following methods to reset the fault after restarting the Inverter. If the operation command is being input, however, the reset signal will be ignored. Therefore, be sure to reset the fault with the operation command turned off.

- Turn on the fault reset signal. A multi-function input (n36 to n39) must be set to 5 (Fault Reset).
- Press the STOP/RESET Key on the Digital Operator.
- Turn the main circuit power supply off and then on again.

Fault Displays and Processing

Fault display	Fault name and meaning	Probable cause and remedy
oC	**Overcurrent (OC)** The Inverter output current is as high as or higher than 200% of the rated output current.	• A short-circuit or ground fault has occurred and at the Inverter output. → Check and correct the motor power cable. • The V/f setting is incorrect. → Reduce the V/f set voltage. • The motor capacity is too large for the Inverter. → Reduce the motor capacity to the maximum permissible motor capacity. • The magnetic contactor on the output side of the Inverter has been opened and closed. → Rearrange the sequence so that the magnetic contactor will not open or close while the Inverter has current output. • The output circuit of the Inverter is damaged. → Replace the Inverter.
ou	**Overvoltage (OV)** The main circuit DC voltage has reached the overvoltage detection level (200-V models: 410 V DC min.; 400-V models: 820 V DC min.).	• The deceleration time is too short. → Increase the deceleration time. • The power supply voltage is too high. → Decrease the voltage so it will be within specifications. • There is excessive regenerative energy due to overshooting at the time of acceleration. → Suppress the overshooting as much as possible.
Uu1	**Main circuit undervoltage (UV1)** The main circuit DC voltage has reached the undervoltage detection level (200 V DC for the 3G3JV-A2□, 160 V DC for the 3G3JV-AB□, and 400 V DC for the 3G3JV-A4□).	• Power supply to the Inverter has phase loss, power input terminal screws are loose, or the power cable is disconnected. → Check the above and take necessary countermeasures. • Incorrect power supply voltage → Make sure that the power supply voltage is within specifications. • Momentary power interruption has occurred. → Use the momentary power interruption compensation (Set n47 so that the Inverter restarts after power is restored) → Improve the power supply. • The internal circuitry of the Inverter is damaged. →Change the Inverter.

Fault display	Fault name and meaning	Probable cause and remedy
oH	**Radiation fin overheated (OH)** The temperature of the radiation fins of the Inverter has reached 110°C ± 10°C.	• The ambient temperature is too high. → Ventilate the Inverter or install a cooling unit. • The load is excessive. → Reduce the load. → Decrease the Inverter capacity. • The V/f setting is incorrect. → Reduce the V/f set voltage. • The acceleration/deceleration time is too short. → Increase the acceleration/deceleration time. • The ventilation is obstructed. → Change the location of the Inverter to meet the installation conditions. • The cooling fan of the Inverter does not work. → Replace the cooling fan.
oL1	**Motor overload (OL1)** The electric thermal relay actuated the motor overload protective function.	• The load is excessive. → Reduce the load. → Decrease the Inverter capacity. • The V/f setting is incorrect. → Reduce the V/f set voltage. • The value in n11 for maximum voltage frequency is low. → Check the motor nameplate and set n11 to the rated frequency. • The acceleration/deceleration time is too short. → Increase the acceleration/deceleration time. • The value in n32 for rated motor current is incorrect. → Check the motor nameplate and set n32 to the rated current. • The Inverter is driving more than one motor. → Disable the motor overload detection function and install an electronic thermal relay for each of the motors. The motor overload detection function is disabled by setting n32 to 0.0 or n33 to 2. • The motor protective time setting in n34 is short. → Set n34 to 8 (the default value).
oL2	**Inverter overload (OL2)** The electronic thermal relay has actuated the Inverter overload protective function.	• The load is excessive. → Reduce the load. • The V/f setting is incorrect. → Reduce the V/f set voltage. • The acceleration/deceleration time is too short. → Increase the acceleration/deceleration time. • The Inverter capacity is insufficient. → Use an Inverter model with a higher capacity.
oL3	**Overtorque detection (OL3)** There has been a current or torque the same as or greater than the setting in n60 for overtorque detection level and that in n61 for overtorque detection time. A fault has been detected with n59 for overtorque detection function selection set to 2 or 4.	• The mechanical system is locked or has a failure. → Check the mechanical system and correct the cause of overtorque. • The parameter settings were incorrect. → Adjust the n60 and n61 parameters according to the mechanical system. Increase the set values in n60 and n61.
GF	**Ground fault (GF)** The ground fault current at the output of the Inverter has exceeded the rated output current of the Inverter.	• A ground fault has occurred at the Inverter output. → Check the connections between the Inverter and motor and reset the fault after correcting its cause.
EF□	**External fault □(EF□)** An external fault has been input from a multi-function input. A multi-function input 1, 2, 3, or 4 set to 3 or 4 has operated. The EF number indicates the number of the corresponding input (S2 to S5).	• An external fault was input from a multi-function input. → Remove the cause of the external fault. • The sequence is incorrect. → Check and change the external fault input sequence including the input timing and NO or NC contact.

Fault display	Fault name and meaning	Probable cause and remedy
F00	**Digital Operator transmission fault 1 (F00)** An initial memory fault has been detected	• The internal circuitry of the Inverter has a fault. → Turn the Inverter off and on. → Replace the Inverter if the same fault occurs again.
F01	**Digital Operator transmission fault 2 (F01)** A ROM fault has been detected.	• The internal circuitry of the Inverter has a fault. → Turn the Inverter off and on. → Replace the Inverter if the same fault occurs again.
F04	**Initial memory fault (F04)** An error in the built-in EEPROM of the Inverter has been detected.	• The internal circuitry of the Inverter has a fault. → Initialize the Inverter with n01 set to 8 or 9 and turn the Inverter off and on. → Replace the Inverter if the same fault occurs again.
F05	**Analog-to-digital converter fault (F05)** An analog-to-digital converter fault has been detected.	• The internal circuitry of the Inverter has a fault. → Turn the Inverter off and on. → Replace the Inverter if the same fault occurs again.
F07	**Digital Operator fault (F07)** An error in the built-in control circuit of the Digital Operator has been detected.	• The internal circuitry of the Digital Operator has a fault. → Turn the Digital Operator off and on. → Replace the Digital Operator if the same fault occurs again.
CE	**Communications time-over (CE)** Normal RS-422A/485 communications were not established within 2 s. The Inverter will detect this error if n68 (RS-422A/485 communications time-over detection selection) is set to 0, 1, or 2.	• A short-circuit, ground fault, or disconnection has occurred on the communications line. → Check and correct the line. • The termination resistance setting is incorrect. → Set the termination resistance of only the Inverter located at each end of the network to ON. • Noise influence. → Do not wire the communications line along with power lines in the same conduit. → Use the twisted-pair shielded wire for the communications line, and ground it at the Master. • Master's program error. → Check and correct the program so that communications will be performed more than once every 2-s period. • Communications circuit damage. → If the same error is detected as a result of a self-diagnostic test, change the Inverter.
StP	**Emergency stop (STP)** An emergency stop alarm is input to a multi-function input. (A multi-function input 1, 2, 3, or 4 set to 19 or 21 has operated.)	• An emergency stop alarm is input to a multi-function input. → Remove the cause of the fault. • The sequence is incorrect. → Check and change the external fault input sequence including the input timing and NO or NC contact.
OFF	**Power supply error** • Insufficient power supply voltage • Control power supply fault • Hardware fault	• No power supply is provided. → Check and correct the power supply wire and voltage. • Terminal screws are loosened. → Check and tighten the terminal screws. • The Inverter is damaged. → Replace the Inverter.

8-1-2 Warning Detection (Nonfatal Error)

The warning detection is a type of Inverter protective function that does not operate the fault contact output and returns the Inverter to its original status once the cause of the error has been removed. The Digital Operator flashes and display the detail of the error. If a warning occurs, take appropriate countermeasures according to the table below.

Note Some warnings or some cases stop the operation of the Inverter as described in the table.

Warning Displays and Processing

Fault display	Warning name and Meaning	Probable cause and remedy
Uv (flashing)	**Main Circuit Undervoltage (UV)** The main circuit DC voltage has reached the undervoltage detection level (200 V DC for the CIMR-J7AZ-2□, 160 V DC for the CIMR-J7AZ-B□, and 400 V DC for the CIMR-J7AZ-4□).	• Power supply to the Inverter has phase loss, power input terminal screws are loose, or the power line is disconnected. → Check the above and take necessary countermeasures. • Incorrect power supply voltage → Make sure that the power supply voltage is within specifications.
ov (flashing)	**Main Circuit Overvoltage** The main circuit DC voltage has reached the overvoltage detection level (200-V models: 410 V DC min.; 400-V models: 820 V DC min.).	• The power supply voltage is too high. → Decrease the voltage so it will be within specifications.
oH (flashing)	**Radiation fin overheated (OH)** The temperature of the radiation fins of the Inverter has reached 110°C ± 10°C.	• The ambient temperature is too high. → Ventilate the Inverter or install a cooling unit.
CAL (flashing)	**Communications standby (CAL)** No normal DSR message has been received during RS-422A/4895 communications. The Inverter detects this warning only when RUN command selection (n02) is set to 2 or frequency reference selection (n03) is set to 6. Until the warning is reset, no input other than communications input will be ignored.	• A short-circuit, ground fault, or disconnection has occurred on the communications line. → Check and correct the line. • The termination resistance setting is incorrect. → Set the termination resistance of only the Inverter located at each end of the network to ON. • Master's program error. → Check the start of communications and correct the program. • Communications circuit damage. → If a CAL or CE error is detected as a result of a self-diagnostic test, change the Inverter.
oL3 (flashing)	**Overtorque detection (OL3)** There has been a current or torque the same as or greater than the setting in n60 for overtorque detection level and that in n61 for overtorque detection time. A fault has been detected with n59 for overtorque detection function selection set to 1 or 3.	• The mechanical system is locked or has a failure. → Check the mechanical system and correct the cause of overtorque. • The parameter settings were incorrect. → Adjust the n60 and n61 parameters according to the mechanical system. Increase the set values in n60 and n61.
SEr (flashing)	**Sequence error (SER)** A sequence change has been input while the Inverter is in operation. Local or remote selection is input while the Inverter is in operation. **Note** The Inverter coasts to a stop.	• A sequence error has occurred. → Check and adjust the local or remote selection sequence as multi-function input.
bb (flashing)	**External base block (bb)** The external base block command has been input. **Note** The Inverter coasts to a stop.	• The external base block command has been in-put as multi-function input. → Remove the cause of external base block input. • The sequence is incorrect. → Check and change the external fault input sequence including the input timing and NO or NC contact.

Fault display	Warning name and Meaning	Probable cause and remedy
EF (flashing)	**Forward- and reverse-rotation input (EF)** The forward and reverse commands are input to the control circuit terminals simultaneously for 0.5 s or more. **Note** The Inverter stops according to the method set in n04.	• A sequence error has occurred. → Check and adjust the local or remote selection sequence.
StP (flashing)	**Emergency stop (STP)** The Digital Operator stops operating. The STOP/RESET Key on the Digital Operator is pressed while the Inverter is operating according to the forward or reverse command through the control circuit terminals. **Note** The Inverter stops according to the method set in n04.	• The parameter setting was incorrect. → Turn off the forward or reverse command once, check that the n06 parameter setting for STOP/RESET Key function selection, and restart the Inverter.
	The emergency stop alarm signal is input as multi-function input. A multi-function input 1, 2, 3, or 4 set to 20 or 22 has been used. **Note** The Inverter stops according to the method set in n04.	• An emergency stop alarm is input to a multi-function input. → Remove the cause of the fault. • The sequence is incorrect. → Check and change the external fault input sequence including the input timing and NO or NC contact.
FAn (flashing)	**Cooling fan fault (FAN)** The cooling fan has been locked.	• The cooling fan wiring has a fault. → Turn off the Inverter, dismount the fan, and check and repair the wiring. • The cooling fan in not in good condition. → Check and remove the foreign material or dust on the fan. • The cooling fan is beyond repair. → Replace the fan.
CE	**Communications time-over (CE)** Normal RS-422A/485 communications were not established within 2 s. The Inverter will detect this error if n68 (RS-422A/485 communications time-over detection selection) is set to 0, 1, or 2.	• A short-circuit, ground fault, or disconnection has occurred on the communications line. → Check and correct the line. • The termination resistance setting is incorrect. → Set the termination resistance of only the Inverter located at each end of the network to ON. • Noise influence. → Do not wire the communications line along with power lines in the same conduit. → Use the twisted-pair shielded wire for the communications line, and ground it at the Master. • Master's program error. → Check and correct the program so that communications will be performed more than once every 2-s period. • Communications circuit damage. → If the same error is detected as a result of a self-diagnostic test, change the Inverter.
oP1 (flashing)	**Operation error (OP□)** (Parameter setting error)	• The values in n36 through n39 for multi-function inputs 1 through 4 have been duplicated. . → Check and correct the values.
oP2 (flashing)		• The V/f pattern settings do not satisfy the following condition. n14 ≦ n12 < n11 ≦ n09 → Check and correct the set value.
oP3 (flashing)		• The rated motor current set in n32 exceeds 150% of the rated output current of the Inverter. → Check and correct the value.
oP4 (flashing)		• The frequency reference upper limit set in n30 and the frequency reference lower limit set in n31 do not satisfy the following condition. n30 ≧ n31 → Check and correct the set values.
oP5 (flashing)		• The jump frequencies set n49, n50 do not satisfy the following condition. n49 ≧ n50 → Check and correct the set values.

8-2 Troubleshooting

Due to parameter setting errors, faulty wiring, and so on, the Inverter and motor may not operate as expected when the system is started up. If that should occur, use this section as a reference and apply the appropriate measures.
Refer to *8-1 Protective and Diagnostic Functions*, if the contents of the fault are displayed.

8-2-1 Parameters Fail Set

The display does not change when the Increment or Decrement Key is pressed.

Parameter write-prohibit is input.

This occurs when n01 for parameter write-prohibit selection/parameter initialization is set to 0. Set n01 to an appropriate value according to the parameter to be set.

The Inverter is operating.

There are some parameters that cannot be set during operation. Refer to the list of parameters.
Turn the Inverter off and then make the settings.

The Digital Operator does not display anything.

Turn the Inverter off and on. If the Digital Operator still does not display anything, the internal circuitry of the Inverter must have failed. Replace the Inverter.

8-2-2 Motor Fails to Operate

The motor does not operate with input through the control circuit terminals even though the frequency reference is correct.

The operation method setting is incorrect.

If parameter n02 for operation mode selection is not set to 1 to enable the control circuit terminals, the RUN command cannot be executed through the control circuit terminals.

Check and correct the setting in n02.

Input in 2-wire sequence while 3-wire sequence is in effect and vice-versa.

The Inverter will operate in 3-wire sequence according to the RUN, stop, and forward/stop commands if n37 for multi-function input 2 is set to 0. At that time, the Inverter will not operate if input in 2-wire sequence is ON. On the other hand, the Inverter in 2-wire sequence will only rotate in the reverse direction if input in 3-wire sequence is ON.

Check and correct the setting in n37 or change the input method of the RUN command.

The Inverter is not in RUN mode.

When the PRGM or LO/RE indicator (red indicator) of the Digital Operator is lit, the Inverter does not start.

Cancel the RUN command, press the Mode Key to change the mode of the Inverter, and restart the Inverter with the green indicator lit.

The frequency reference is too low.

If the frequency reference is set below the minimum output frequency set in n14, the Inverter will not operate.

Raise the frequency reference to at least the minimum output frequency.

The Inverter is in local mode.

The Inverter in local mode starts with the RUN command given with the RUN Key pressed.

Check the LO/RE indicator. If the display is “Lo,” the Inverter is in local mode. Press the Increment Key and set the Inverter to remote mode with “rE” displayed.

If the above operation is not possible, a multi-function input is set to local/remote selection. In that case, the mode can be changed with the multi-function input only. Turn the corresponding input terminal OFF so that the Inverter will be set to remote mode.

The wiring on the Inverter control circuit terminals is incorrect.

The Inverter cannot check input signals if the input wiring on the control circuit terminals is incorrect.

Operate the Digital Operator and check the input terminal status of multi-function monitor U06.

The NPN or PNP input sequence is selectable. The NPN input sequence is the default setting.

Refer to *2-2-2 Terminal Block* and check that the setting of switch SW7 and wiring are correct.

The motor does not operate with input through the control circuit terminals. (The frequency reference is zero or different from the set value.)

The frequency reference setting is incorrect.

The analog input of frequency references is ignored with the Digital Operator selected. The digital input of frequency references is ignored unless the Digital Operator is selected.

Check that the setting in n03 for frequency reference selection coincides with the actual method of giving frequency instructions.

Before using analog input, refer to *2-2-2 Terminal Block* and check that the setting of SW8 and the actual method (with voltage and current) of providing frequency references are correct.

The Inverter is in local mode.

Frequency references can be provided only through key sequences on the Digital Operator or with the FREQ adjuster to the Inverter in local mode.

Check the LO/RE indicator. If the display is “Lo,” the Inverter is in local mode. Press the Increment Key and set the Inverter to remote mode with “rE” displayed.

If the above operation is not possible, the multi-function input will be set to local/remote selection. In that case, the mode can be changed with the multi-function input only. Turn the corresponding input terminal OFF so that the Inverter will be set to remote mode.

The analog input gain or bias setting is incorrect.

Check that the frequency reference gain in n41 and frequency reference bias in n42 are set according to the actual analog input characteristics.

The motor stops during acceleration or when a load is connected.

The load may be too big.

The J7AZ has a stall prevention function and automatic torque boost function, but the motor responsiveness limit may be exceeded if acceleration is too rapid or if the load is too big.

Lengthen the acceleration time or reduce the load. Also consider increasing the motor capacity.

The motor only rotates in one direction.

Reverse rotation-prohibit is selected.

If n05 for reverse rotation-prohibit selection is set to 1 (reverse run prohibited), the Inverter will not accept reverse-rotation commands.

To use both forward and reverse rotation, set n05 to 0.

8-2-3 Motor Rotates in the Wrong Direction

The output wiring of the motor is faulty.

When the U/T1, V/T2, and W/T3 terminals of the Inverter are properly connected to the T1(U), T2(V), and T3(W) terminals of the motor, the motor operates in a forward direction when a forward rotation command is executed. The forward direction depends on the maker and the motor type. Therefore, be sure to check the specifications. Switching two wires among the U/T1, V/T2, and W/T3 will reverse the direction of rotation.

8-2-4 Motor Outputs No Torque or Acceleration is Slow

The stall prevention level during running is too low.

If the value in n57 for stall prevention level during operation is too low, the speed will drop before torque output is turned ON.

Check to be sure that the set value is suitable.

The stall prevention level during acceleration is too low.

If the value in n56 for stall prevention level during acceleration is too slow, the acceleration time will be too long.

Check to be sure that the set value is suitable.

8-2-5 Motor Deceleration is Slow

The deceleration time setting is too long.

Check the deceleration time settings in n17 and n19.

Stall Prevention during Deceleration

The Inverter incorporates a stall prevention function that will automatically prolong the period of deceleration if the motor has an excessive amount of regenerative energy. This function will operate if the period of deceleration is longer than the set value. If the period of deceleration needs to coincide with the set value, use an Inverter model with a larger capacity or a model incorporating a function to process regenerative energy (such as the VARISPEED V7 or 3G3EV-series Inverter).

8-2-6 Motor Burns

The load is too big.

If the load of the motor is too big and the motor is used with the effective torque exceeding the rated torque of the motor, the motor will burn out. For example, the rated torque of the motor and capacity may be limited to eight hours of use if the inscription on the motor states that the motor is rated for eight hours. If the 8-hour rated torque is used for normal operation, it may cause the motor to bun out.

Reduce the load amount by either reducing the load or lengthening the acceleration/deceleration time. Also consider increasing the motor capacity.

The ambient temperature is too high.

The rating of the motor is determined within a particular ambient operating temperature range. The motor will burn out if it runs continuously at the rated torque in an environment in which the maximum ambient operating temperature is exceeded.

Lower the ambient temperature of the motor to within the acceptable ambient operating temperature range.

The withstand voltage between the phases of the motor is insufficient.

When the motor is connected to the output of the Inverter, a surge will be generated between the switching of the Inverter and the coil of the motor.

Normally, the maximum surge voltage is approximately three times the input power supply voltage of the Inverter (i.e., approximately 600 V for 200-V models, and approximately 1,200 V for 400-V models).

Therefore, the dielectric strength of the motor to be used must be higher than the maximum surge voltage.

8-2-7 Controller or AM Radio Receives Noise when Inverter is Started

Noise derives from Inverter switching.

Take the following actions to prevent noise.

- Lower the carrier frequency of the Inverter in n46.
  The number of internal switching times is reduced, so noise can be reduced to some extent.
- Install an Input Noise Filter.
  Install an Input Noise Filter on the power input area of the Inverter.
- Install an Output Noise Filter.
  Install an Output Noise Filter on the output area of the Inverter.
- Use metal tubing.
  Electric waves can be shielded by metal. Therefore, enclose the Inverter with a metal tube.

8-2-8 Ground Fault Interrupter is Actuated when Inverter is Started

Leakage current flows through the Inverter.

The Inverter performs internal switching. Therefore, a leakage current flows through the Inverter. This leakage current may actuate the ground fault interrupter, shutting the power off.

Use a ground fault interrupter with a high leakage-current detection value (sensitivity amperage of 200 mA or more, operating time of 0.1 s or more) or one with high-frequency countermeasures for Inverter use.

Reducing the carrier frequency value in n46 is also effective.
In addition, remember that a leakage current increases in proportion to the cable length. Normally, approximately 5 mA of leakage current is generated for each meter of cable.

8-2-9 Mechanical Vibration

Mechanical system makes unusual noise.

Resonance between the characteristic frequency of the mechanical system and the carrier frequency.

There may be resonance between the characteristic frequency of the mechanical system and the carrier frequency. If the motor is running with no problems and the machinery system is vibrating with a high-pitched whine, it may indicate that this is occurring. To prevent this type of resonance, adjust the carrier frequency value in n46.

Resonance between the characteristic frequency of a machine and the output frequency of the Inverter.

There may be resonance between the characteristic frequency of a machine and the output frequency of the Inverter. To prevent this from occurring, use the frequency jump function with the constants set in n49 through n51 to change the output frequency or install vibration-proof rubber on the motor base to prevent the resonance of the mechanical system.

Vibration and hunting are occurring.

Influence by the slip compensation function.

The slip compensation function of the Inverter may influence the characteristic frequency of the mechanical system to cause vibration or hunting. In that case, increase the time constant in n67 for slip compensation. The larger this time constant is, however, the slower the response speed of the slip compensation function will be.

Motor vibrates excessively and does not rotate normally.

Motor Phase Interruption

If one or two of the three phases of the motor are open, the motor will vibrate excessively and will not rotate. Check that the motor is wired correctly without any disconnection. The same phenomenon will occur if the output transistor of the Inverter is open and damaged. Check the balance of the Inverter's output voltage as well.

8-2-10 Motor Rotates after Output of Inverter is Turned Off

Insufficient DC Control

If the motor continues operating at low speed, without completely stopping, and after a deceleration stop has been executed, it means that the DC braking is not decelerating enough.

In such cases, adjust the DC control as described below.

- Increase the parameter in n52 for DC control current.
- Increase the parameter in n53 for interruption DC control time.

8-2-11 Detects OV when Motor Starts and Motor Stalls

Insufficient DC control at startup

Generation of OV and stalling can occur if the motor is turning when it is started.

This can be prevented by slowing the rotation of the motor by DC braking before starting the motor.

Increase the parameter in n54 for startup DC control time.

8-2-12 Output Frequency Does Not Reach Frequency Reference

The frequency reference is within the jump frequency range.

If the jump function is used, the output frequency stays within the jump frequency range.

Make sure that the jump width settings in n49 through n50 for jump frequencies 1 and 2 and jump width in n51 are appropriate.

The preset output frequency exceeds the upper-limit frequency.

The upper-limit frequency can be obtained from the following formula.
Maximum frequency in n09 × frequency reference upper limit in n30/100

Make sure that the parameters in n09 and n30 are correct.

8-2-13 Inverter Does Not Run

Because EF (Simultaneous Input of Forward and Reverse Commands) is Detected, or Motor Rotates Momentarily While Control Device Power is OFF

Sequence Error

An EF will be detected if a forward command and a reverse command are input simultaneously for 0.5 seconds or longer. Correct the sequence.

Malfunction Due to Unwanted Current Path

Inverter inputs may remain ON due to an unwanted current path for the controller outputs. With the wiring shown in the following table, if the controller output power supply is less than 24 V DC or if the power is OFF, the current indicated by the arrow will flow and the Inverter inputs will operate. If that occurs, insert a diode as shown in the diagram at point A.

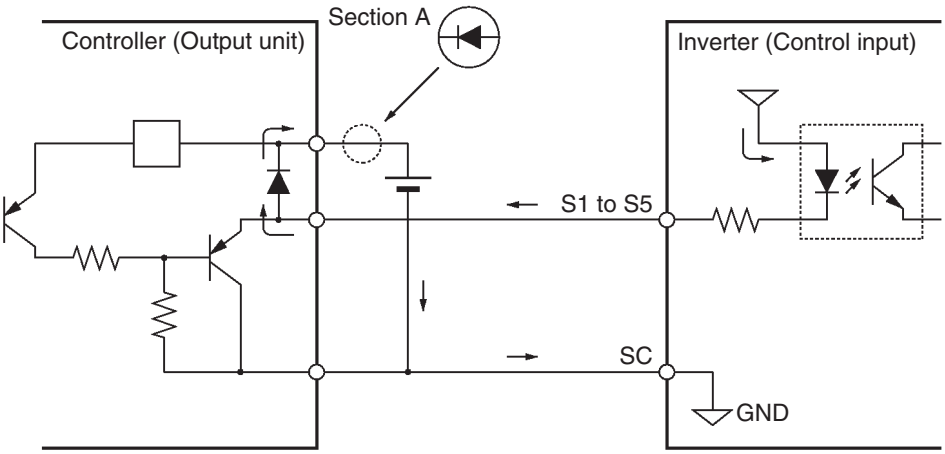

8-3 Maintenance and Inspection

⚠ WARNING Do not touch the Inverter terminals while the power is being supplied.

⚠ WARNING Maintenance or inspection must be performed only after turning OFF the power supply, confirming that the CHARGE indicator (or status indicators) is turned OFF, and after waiting for the time specified on the front cover. Not doing so may result in electrical shock.

⚠ WARNING Maintenance, inspection, or parts replacement must be performed by authorized personnel. Not doing so may result in electrical shock or injury.

⚠ WARNING Do not attempt to take the Unit apart or repair. Doing either of these may result in electrical shock or injury.

⚠ Caution Carefully handle the Inverter because it uses semiconductor elements. Careless handling may result in malfunction.

⚠ Caution Do not change wiring, disconnect connectors, the Operator, or optional items, or replace fans while power is being supplied. Doing so may result in injury, damage to the product, or malfunction.

Daily Inspection

Check the following items with the system in operation.

- The motor should not be vibrating or making unusual noises.
- There should be no abnormal heat generation.
- The output current value shown on the monitor display should not be higher than normal.
- The cooling fan on the bottom of the Inverter should be operating normally, if the Inverter model has the cooling fan.

Periodic Inspection

Check the following items during periodic maintenance.

Before beginning inspection, be sure to turn off the power supply. Confirm that all the indicators on the front panel have turned off, and then wait until at least 1 minute has elapsed before beginning the inspection.

Be sure not to touch the terminals right after the power has been turned off. Otherwise, an electric shock may occur.

- The terminal screws of the Inverter should not loose.
- There should be no conductive dust or oil mist on the terminal block or inside the Inverter.
- The mounting screws of the Inverter should not be loose.
- No dirt or dust should be accumulating on the radiation fin.
- No dust should be accumulating on the vents of the Inverter.
- There should be no abnormalities in the outward appearance of the Inverter.
- There should be no unusual noises or vibration and the accumulated operating time should not exceeded the specifications.

Periodic Maintenance Parts

The Inverter is configured of many parts, and these parts must operate properly in order to make full use of the Inverter's functions. Among the electronic components, there are some that require maintenance depending on their usage conditions. In order to keep the Inverter operating normally over a long period of time, it is necessary to perform periodic inspections and replace parts according to their service life.

Periodic inspection standards vary with the installation environment and usage conditions of the Inverter.

The maintenance periods of the Inverter are described below. Keep them as reference.

Maintenance Periods (Reference)

- Cooling fan: 2 to 3 years
- Electrolytic capacitor: 5 years
- Fuse: 10 years

The usage conditions are as follows:

- Ambient temperature: 40°C
- Load factor: 80%
- Operation: 8 hours per day
- Installation: According to instructions in manual

It is recommended that the ambient temperature and power-on time be reduced as much as possible to extend of the life of the Inverter.

Note For details regarding maintenance, consult your OMRON-YASKAWA representative.

Replacement of Cooling Fan

If the FAN fault is displayed or the cooling fan needs replacement, take the following steps to replace it.

Cooling Fan Models

Inverter		Cooling Fan
3-phase 200-V AC	CIMR-J7AZ21P5 or 3G3JV-22P2	FAN001062
	CIMR-J7AZ24P0	FAN001063
Single-phase 200-V AC	CIMR-J7AZB1P5	FAN001062
3-phase 400-V AC	CIMR-J7AZ41P5 or CIMR-J7AZ42P2	FAN001062
	CIMR-J7AZ44P0	FAN001063

Replacing Cooling Fan (68- or 140-mm-wide Inverters)

1. Press the left and right sides of the fan cover located on the lower part of the radiation fin in the arrow directions. Then lift the bottom of the Fan in the arrow 2 direction to remove the Fan as shown in the following illustration.

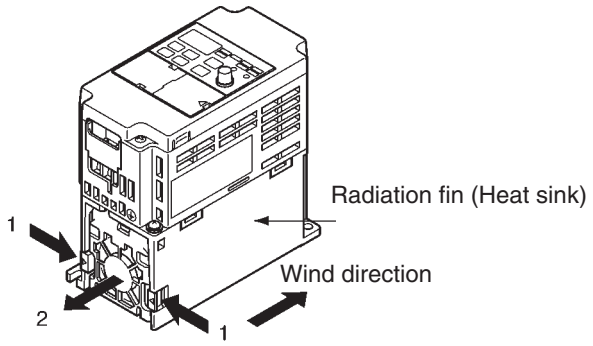

2. Hold the fan wire and pull the protective tube of the cover in the arrow 3 direction.

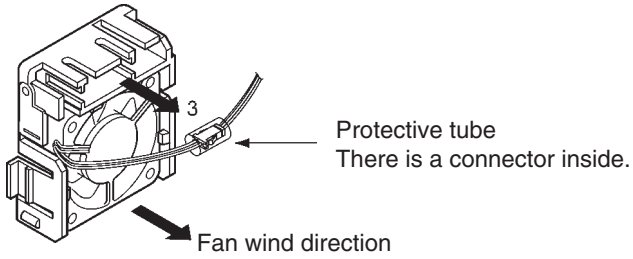

3. Slide the protective tube and remove the internal connector.
4. Remove the Fan from the fan cover.
5. Mount the new Fan on the fan cover. At this time, make sure that the wind direction of the Fan will be in the direction of the heat radiation fin.
6. Attach the connector, cover the connector with the protective tube, and insert the connector into the cover.
7. Mount the fan cover with the new Fan to the lower part of the heat radiation fin. Make sure that the fan cover snaps on securely with the heat radiation fin.

Replacing Cooling Fan of 108-mm-wide Inverter Model

1. Dismount the front cover, bottom cover, and fan connector CN4.

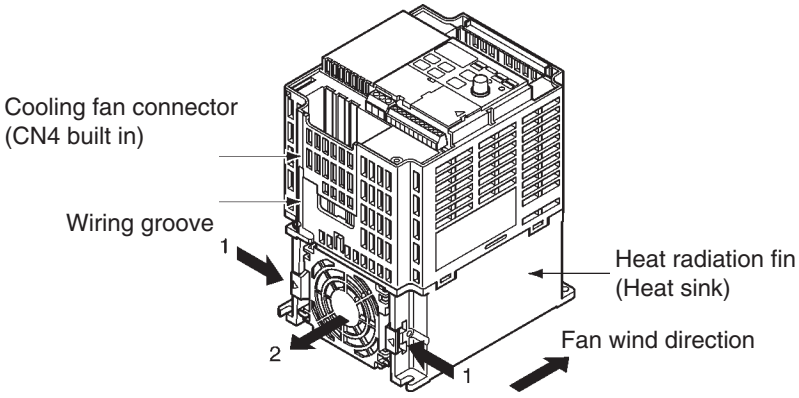

2. Press the left and right sides of the fan cover located on the lower part of the radiation fin in the arrow 1 directions. Then lift the bottom of the Fan in the arrow 2 direction to remove the fan as shown in the following illustration.
   Disconnect the wire from the electrical inlet on the bottom of the plastic casing.
3. Remove the Fan from the fan cover.
4. Mount the new Fan on the fan cover. At this time, make sure that the wind direction of the fan will be in the direction of the heat radiation fin.
5. Mount the fan cover with the new Fan to the lower part of the heat radiation fin. Make sure that the fan cover snaps on securely with the heat radiation fin.
6. Wire the power line through the electrical inlet on the bottom of the plastic casing and the wiring groove into the internal circuitry of the Inverter.
7. Attach the wire to connector CN4 and attach the bottom cover and front cover.

CHAPTER 9
Specifications

9-1 Inverter Specifications 132
9-2 Specifications of Accessories 135
9-2-1 List of Accessories 135
9-2-2 Adapter Panel 136
9-2-3 RS-422/485 Communications Unit 137
9-2-4 Fan Unit 137
9-2-5 Digital Operator 138
9-2-6 Digital Operator Case 139
9-2-7 Digital Operator Connection Cable 139
9-2-8 DC Reactor 139
9-2-9 DIN Track Mounting Bracket 140
9-2-10 AC Reactor 141
9-3 Option Specifications 142
9-3-1 EMC-compatible Noise Filter 142

9-1 Inverter Specifications

3-phase 200-V AC models	**Model CIMR-J´7AZ**		**20P1**	**20P2**	**20P4**	**20P7**	**21P5**	**22P2**	**24P0**
	Power supply	**Rated voltage and frequency**	3-phase 200 to 230 V AC at 50/60 Hz						
		Allowable voltage fluctuation	–15% to 10%						
		Allowable frequency fluctuation	±5%						
	Power supply capacity (kVA) (See note 1.)		0.4	0.9	1.6	2.7	4.3	5.9	9.3
	Heat radiation (W)		13.0	18.0	28.1	45.1	72.8	94.8	149.1
	Weight (kg)		0.5	0.5	0.8	0.9	1.3	1.5	2.1
	Cooling method		Natural cooling			Cooling fan			

Single-phase 200-V AC models	**Model CIMR-J7AZ**		**B0P1**	**B0P2**	**B0P4**	**B0P7**	**B1P5**	**---**	**---**
	Power supply	**Rated voltage and frequency**	Single-phase 200 to 240 V AC at 50/60 Hz						
		Allowable voltage fluctuation	–15% to 10%						
		Allowable frequency fluctuation	±5%						
	Power supply capacity (kVA) (See note 1.)		0.5	0.9	1.6	2.7	4.3	---	---
	Heat radiation (W) (See note 2.)		14.1	20.0	31.9	51.4	82.8	---	---
	Weight (kg)		0.5	0.5	0.9	1.5	1.5	---	---
	Cooling method		Natural cooling				Cooling fan		

Max. applicable motor capacity (kW)		0.1	0.2	0.4	0.75	1.5	2.2	3.7
Output specifi-cations	**Rated output capacity (kVA)**	0.3	0.6	1.1	1.9	3.0	4.2	6.7
	Rated output current (A)	0.8	1.6	3.0	5.0	8.0	11.0	17.5
	Rated output voltage (V)	3-phase 200 to 240 V AC (according to the input voltage)						
	Max. output frequency	400 Hz parameter setting						
Control charac-teristics	**Harmonic-current countermeasures**	DC reactor (option) connection possible						
	Control method	Sine wave PWM (V/f control)						
	Carrier frequency	2.5 to 10.0 kHz (in vector control)						
	Frequency control range	0.1 to 400 Hz						
	Frequency precision (temperature characteristics)	Digital commands: ±0.01% (–10°C to 50°C) Analog commands: ±0.5% (25°C ±10°C)						
	Frequency setting resolution	Digital commands: 0.1 Hz (less than 100 Hz) and 1 Hz (100 Hz or over) Analog commands: 0.06 Hz/60 Hz (equivalent to 1/1000)						
	Output frequency resolution	0.01 Hz						

Control charac-teristics	**Overload capacity**	150% of rated output current for 1 min
	External frequency set signal	Selectable with FREQ adjuster: 0 to 10 V DC (20 kW), 4 to 20 mA (250 W), and 0 to 20 mA (250 W)
	Acceleration/deceleration time	0.0 to 999 s (Independent acceleration and deceleration time settings: 2 types)
	Braking torque	Approx. 20% (Braking Resistor and Braking Unit cannot be connected.)
	Voltage/frequency characteristics	Set a user V/f pattern
Protection function	**Motor protection**	Protection by electronic thermal
	Instantaneous overcurrent protection	Stops at approx. 250% of rated output current
	Overload protection	Stops in 1 min at approximately 150% of rated output current
	Overvoltage protection	Stops when main-circuit DC voltage is approximately 410 V
	Undervoltage protection	Stops when main-circuit DC voltage is approximately 200 V (160 V for single-phase 200-V AC model)
	Momentary power	Stops for 15 ms or more. By setting the Inverter to momentary
	interruption compensation (selection)	power interruption mode, operation can be continued if power is restored within approximately 0.5 s.
	Cooling fin overheating	Detects at 110°C ±10°C
	Grounding protection	Protection at rated output current level
	Charge indicator (RUN indicator)	Lit when the main circuit DC voltage is approximately 50 V or less.
Environ-ment	**Location**	Indoors (with no corrosive gas, oil spray, or metallic dust)
	Ambient temperature	Operating: –10°C to 50°C
	Ambient humidity	Operating: 95% max. (with no condensation)
	Ambient temperature	–20°C to 60°C
	Altitude	1,000 m max.
	Insulation resistance	5 MWmin. (Do not carry out any insulation resistance or withstand voltage tests)
	Vibration resistance	9.8 m/s2max. between 10 to 20 Hz 2.0 m/s2max. between 20 and 50 Hz
Degree of protection		Panel-mounting models: Conforms to IP20

Note

1. The power supply capacity is the capacity for the Inverter's rated output. It will vary depending on the impedance at the input power supply. (This is due to fluctuations in the power factor. The power factor can be improved by inserting an AC reactor.) There will also be variations in the ratio between the rated current of the motor that is used and the rated output current of the Inverter.
2. The heat radiation is the electric power consumed in the Inverter at the Inverter's rated output.

3-phase 400-V AC models	**Model CIMR-J7AZ**		**40P2**	**40P4**	**40P7**	**41P5**	**42P2**	**44P0**
	Power supply	**Rated voltage and frequency**	3-phase 380 to 460 V AC at 50/60 Hz					
		Allowable voltage fluctuation	–15% to 10%					
		Allowable frequency fluctuation	±5%					
	Power supply capacity (kVA) (See note 1.)		1.3	1.9	3.6	5.1	5.9	9.1
	Heat radiation (W) (See note 2.)		23.1	30.1	54.9	75.7	83.0	117.9
	Weight (kg)		1.0	1.1	1.5	1.5	1.5	2.1
	Cooling method		Natural cooling			Cooling fan		

Max. applicable motor capacity (kW)		0.2	0.4	0.75	1.5	2.2	3.7
Output specifi-cations	**Rated output capacity (kVA)**	0.9	1.4	2.6	3.7	4.2	6.6
	Rated output current (A)	1.2	1.8	3.4	4.8	5.5	8.6
	Rated output voltage (V)	3-phase 380 to 460 V AC (according to the input voltage)					
	Max. output frequency	400 Hz parameter setting					
Control charac-teristics	**Harmonic-current countermeasures**	DC reactor (option) connection possible					
	Control method	Sine wave PWM (V/f control)					
	Carrier frequency	2.5 to 10.0 kHz (in vector control)					
	Frequency control range	0.1 to 400 Hz					
	Frequency precision (temperature characteristics)	Digital commands: ±0.01% (–10°C to 50°C) Analog commands: ±0.5% (25°C ±10°C)					
	Frequency setting resolution	Digital commands: 0.1 Hz (less than 100 Hz) and 1 Hz (100 Hz or over) Analog commands: 0.06 Hz/60 Hz (equivalent to 1/1000)					
	Output frequency resolution	0.01 Hz					
	Overload capacity	150% of rated output current for 1 min					
	External frequency set signal	Selectable with FREQ adjuster: 0 to 10 V DC (20 kW), 4 to 20 mA (250 W), and 0 to 20 mA (250 W)					
	Acceleration/deceleration time	0.0 to 999 s (Independent acceleration and deceleration time settings: 2 types)					
	Braking torque	Approx. 20% (Braking Resistor and Braking Unit cannot be connected.)					
	Voltage/frequency characteristics	Set a user V/f pattern					

Protective functions	**Motor protection**	Protection by electronic thermal
	Instantaneous overcurrent protection	Stops at approx. 250% of rated output current
	Overload protection	Stops in 1 min at approximately 150% of rated output current
	Overvoltage protection	Stops when main-circuit DC voltage is approximately 820 V
	Undervoltage protection	Stops when main-circuit DC voltage is approximately 400 V
	Momentary power interruption compensation (selection)	Stops for 15 ms or more. By setting the Inverter to momentary power interruption mode, operation can be continued if power is restored within approximately 0.5 s.
	Cooling fin overheating	Detects at 110°C ±10°C
	Grounding protection	Protection at rated output current level
	Charge indicator (RUN indicator)	Lit when the main circuit DC voltage is approximately 50 V or less.
Environ-ment	**Location**	Indoors (with no corrosive gas, oil spray, or metallic dust)
	Ambient temperature	Operating: –10°C to 50°C
	Ambient humidity	Operating: 95% max. (with no condensation)
	Ambient temperature	–20°C to 60°C
	Altitude	1,000 m max.
	Insulation resistance	5 MWmin. (Do not carry out any insulation resistance or withstand voltage tests)
	Vibration resistance	9.8 m/s2max. between 10 to 20 Hz 2.0 m/s2max. between 20 and 50 Hz
Degree of protection		Panel-mounting models: Conforms to IP20

1. The power supply capacity is the capacity for the Inverter's rated output. It will vary depending on the impedance at the input power supply. (This is due to fluctuations in the power factor. The power factor can be improved by inserting an AC reactor.) There will also be variations in the ratio between the rated current of the motor that is used and the rated output current of the Inverter.
2. The heat radiation is the electric power consumed in the Inverter at the Inverter's rated output.

9-2 Specifications of Accessories

9-2-1 List of Accessories

Mounting Accessories

Name	Model	Description
Adapter Panel (for J7AZ Series)	SI232J/J7 & SI232J/J7C	Interface required to connect a Digital Operator to a J7AZ Inverter. There are two types of Adapter Panels available: a fixed type (SI232J/J7) and a detach-able type (SI232J/J7C). Use the detachable type for copying parameters.
RS-422/485 Communications Unit	SI485/J7	Interface required to perform RS-422/485 general-purpose communications. The communications protocol conforms to MODBUS (same protocol as V7AZ and F7Z Inverters).
Fan Unit	FAN00106□	Replacement for the existing cooling fan of the Inverter. Replace the cooling fan if it has reached the end of its service life or a warning of cooling fan failure (FAN) is indicated.

Dedicated Accessories

Name	Model	Description
Digital Operator (with adjuster)	JVOP-140	Operator used to perform operations for J7AZ and V7AZ Inverters. It is identical to the Digital Operator attached to standard V7AZ Inverters, and has a built-in EEPROM in which the Inverter's parameter settings can be stored. If the Digital Operator Case (3G3IV-PEZZ08386A) is used, the Inverter can be mounted in a control panel, or operated by remote control.
Digital Operator (without adjuster)	JVOP-146	Operator used to perform operations for J7AZ and V7AZ Inverters by remote control. It has a built-in EEPROM in which the Inverter's parameter settings can be stored.
Digital Operator Case (for 3G3IV-PJVOP140)	3G3IV-PEZZ08386A	Case for JVOP-140 Digital Operator. Mounting a JVOP-140 in the Case allows the Inverter to mounted in a control panel, or operated by remote control.
Digital Operator Connection Cable	3G3IV-PCN126/326	Required when using a Digital Operator with J7AZ Inverters. Cable length: 1 m, 3 m.
DIN Track Mounting Bracket	3G3IV-PEZZ08122□	An adapter making it possible to easily mount the Inverter to DIN tracks.

Recommendable Separate Accessories

Name	Model	Description
EMC-conforming Input Noise Filter	3G3JV-PFI□	A Noise Filter on the input side meeting the EC Directive's EMC requirements. The top of the Noise Filter has mounting screw holes with which the Inverter mounted to the Noise Filter can be secured.

9-2-2 Adapter Panel

SI232/J7□

An Adapter Panel is required as an interface to connect a Digital Operator (JVOP-140 or JVOP-146) to the J7AZ Inverter.

There are two models of Adapter Panel available. The SI232/J7 is permanently installed and cannot be removed and the SI232/J7C for copying parameters is installed so that it can be removed.

Connections

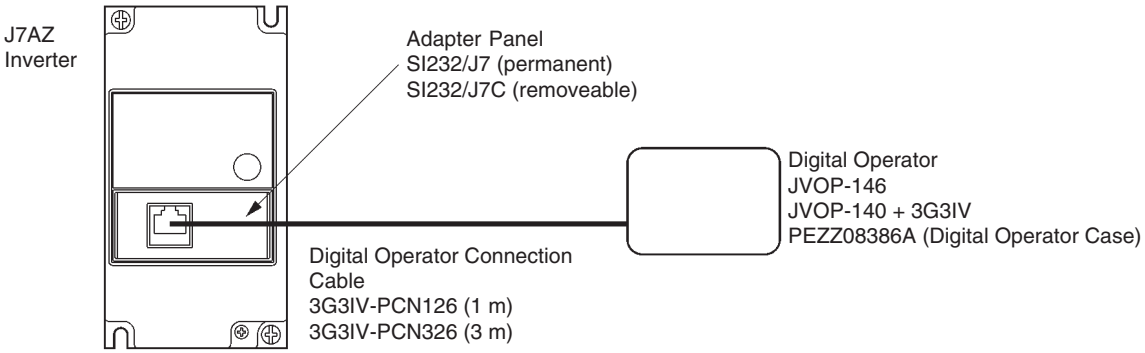

Dimensions (mm)

SI232/J7 (Permanent)

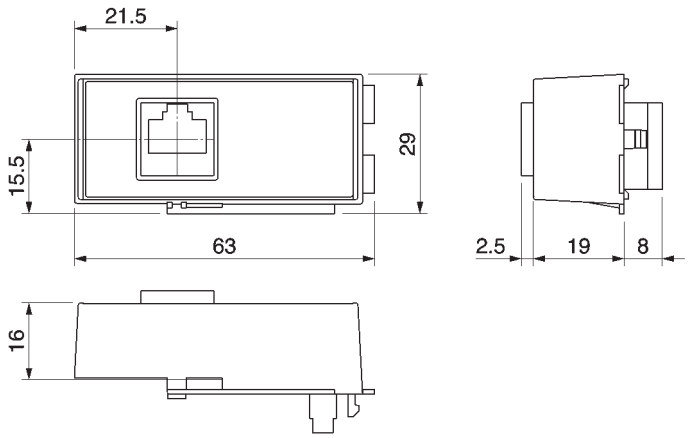

SI232/J7C (Removeable)

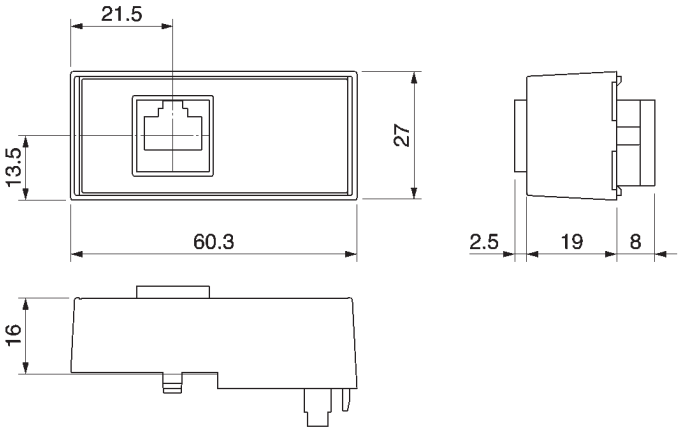

9-2-3 RS-422/485 Communications Unit

SI485/J7

The RS-422/485 Communications Unit (SI485/J7) functions as an interface for RS-422/485 general-purpose communications. The communications protocol conforms to MODBUS (same protocol as V7AZ and F7 Inverters). Communications can be used for Inverter control inputs, frequency references, monitoring Inverter operating status, and reading/writing parameter settings.

Note Refer to *CHAPTER 7 Communications* for details.

Dimensions (mm)

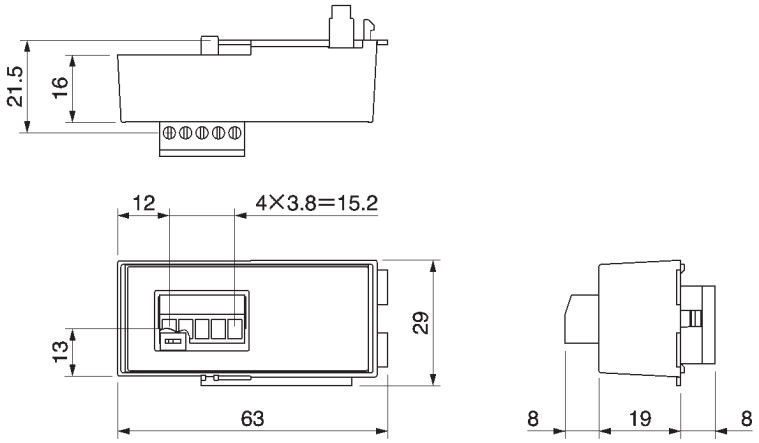

9-2-4 Fan Unit

FAN00106□

The Fan Unit is a replacement for the presently installed cooling fan of the Inverter.

Replace the cooling fan if it has reached the end of its service life or a warning of cooling fan failure (FAN) is indicated.

Applicable Models

Inverter		Fan Unit
3-phase 200 V AC		
	CIMR-J7AZ21P5/-22P2	FAN001062
	CIMR-J7AZ24P0	FAN001063
Single-phase 200 V AC	CIMR-J7AZB1P5	FAN001062
3-phase 400 V AC	CIMR-J7AZ41P5/-42P2	FAN001062
	CIMR-J7AZ44P0	FAN001062

Replacement Method

Refer to *8-3 Maintenance and Inspection*.

9-2-5 Digital Operator

JVOP-140/JVOP-146

The Digital Operator (JVOP-140/JVOP-146) is used to control the Inverter from a distance. There are two models available. The JVOP-140 is equipped with an adjuster and the JVOP-146 is not.

Always use the JVOP140 together with a Digital Operator Case (3G3IV-PEZZ08386A). Without the Case, the Digital Operator's connection cable cannot be wired. Using the Case also enables mounting to a control panel.

Note When a Digital Operator is connected, the Operator on the Inverter cannot be used to control operation (i.e., only display functions will work).

Dimensions (mm)

JVOP-140
(with Adjuster)

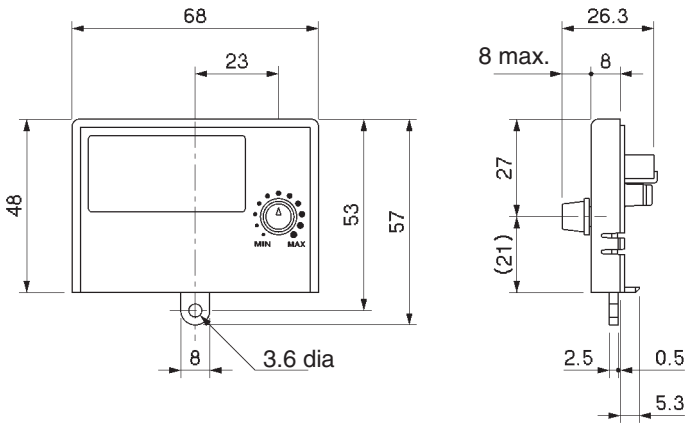

JVOP-146
(without Adjuster)

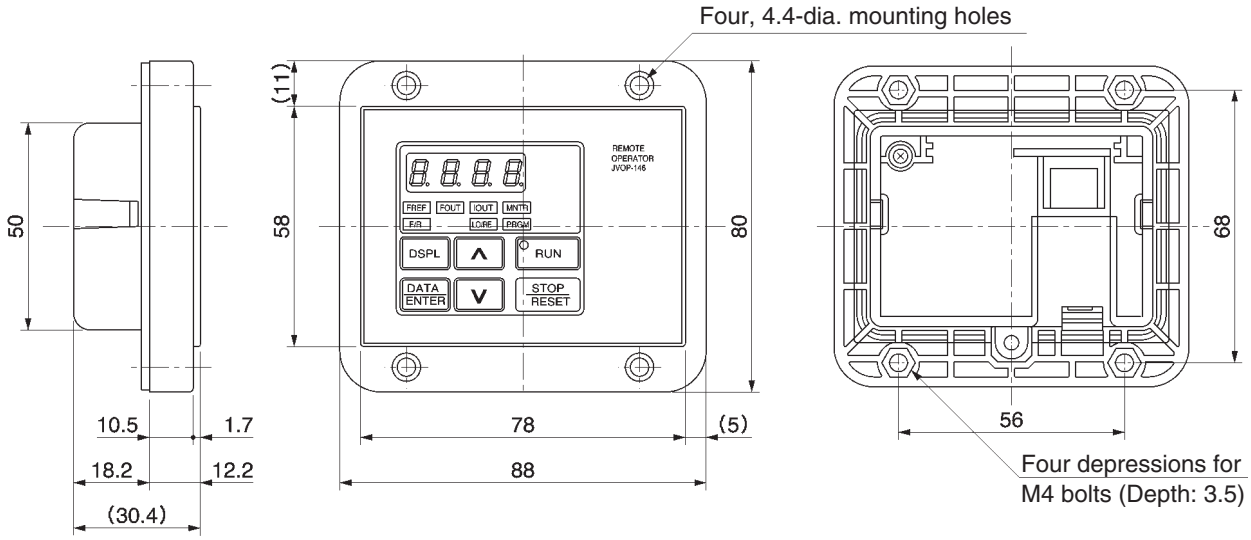

9-2-6 Digital Operator Case

3G3IV-PEZZ08386A

The Digital Operator Case (3G3IV-PEZZ08386A) is used to secure the JVOP-140 Digital Operator. Without this Case, the Digital Operator's connection cable cannot be wired. Always use the JVOP-140 and the Digital Operator Case together.

Dimensions (mm)

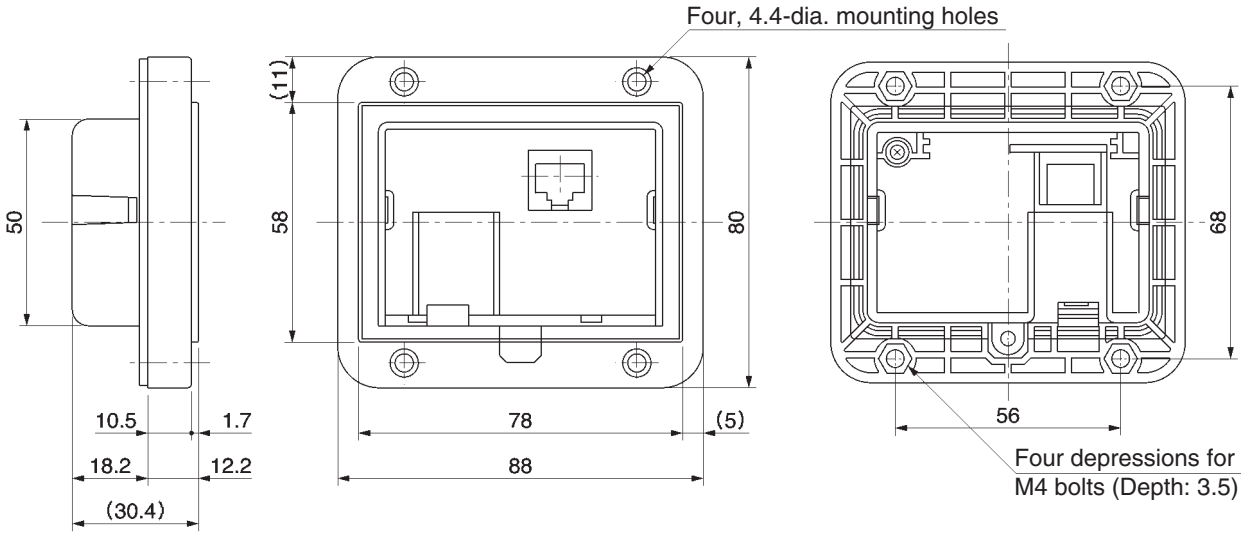

9-2-7 Digital Operator Connection Cable

3G3IV-PCN126/PCN326

The Digital Operator Connection Cable (3G3IV-PCN126/PCN326) is required to connect a Digital Operator to a J7AZ Inverter.

Models and Specifications

Digital Operator Connection Cable	Cable length
3G3IV-PCN126	1 m
3G3IV-PCN326	3 m

9-2-8 DC Reactor

The DC Reactor suppresses harmonic current generated from the Inverter and improves the power factor of the Inverter. The DC Reactor suppresses harmonic current more effectively than the AC Reactor. Furthermore, the DC Reactor can be used in combination with the AC Reactor.

Applicable Model

Inverter		DC Reactor	
Voltage class	Max. applicable motor capacity (kW)	Rated current (A)	Inductance (mH)
200 V	0.1 to 0.75	5.4	8
	1.5 to 4.0	18	3
400 V	0.2 to 0.75	3.2	28
	1.5 to 2.2	5.7	11
	4.0	12	6.3

9-2-9 DIN Track Mounting Bracket

3G3IV-PEZZ08122□

An adapter making it possible to easily mount the Inverter to DIN tracks.

Applicable Model

Inverter		DIN Track Mounting Bracket
3-phase 200 V AC	CIMR-J7AZ20P1/-20P2/-20P4/-20P7	3G3IV-PEZZ08122A
	CIMR-J7AZ21P5/-22P2	3G3IV-PEZZ08122B
	CIMR-J7AZ24P0	3G3IV-PEZZ08122C
Single-phase 200 V AC	CIMR-J7AZB0P1/-B0P2/-B0P4	3G3IV-PEZZ08122A
	CIMR-J7AZB0P7/-B1P5	3G3IV-PEZZ08122B
3-phase 400 V AC	A4004/-A4007/-A4015/-A4022	3G3IV-PEZZ08122B
	CIMR-J7AZ44P0	3G3IV-PEZZ08122C

External Dimensions (mm)

3G3IV-PEZZ08122A

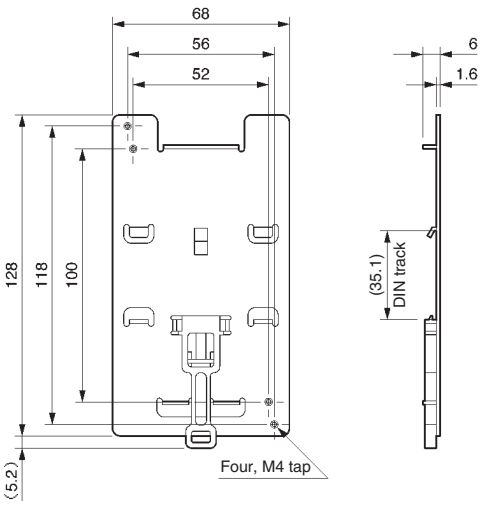

3G3IV-PEZZ08122B

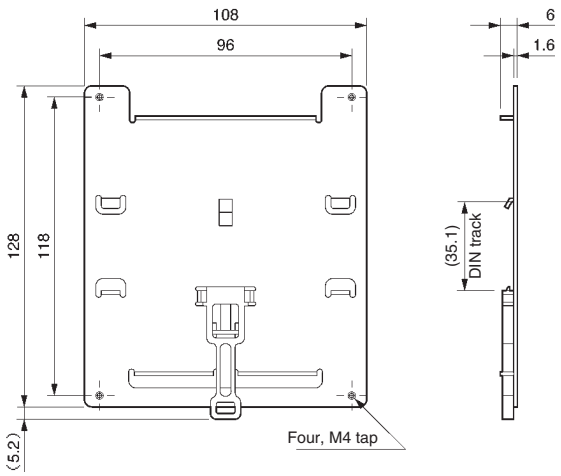

3G3IV-PEZZ08122C

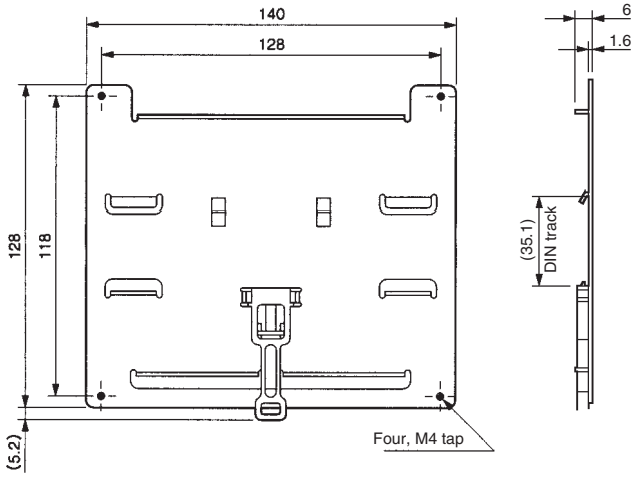

9-2-10 AC Reactor

The AC Reactor suppresses harmonic current generated from the Inverter and improves the power factor of the Inverter. Connect the AC Reactor to the Inverter if the capacity of the power supply is much larger than that of the Inverter. Select the AC Reactor model from the following table according to the motor capacity.

Connection Example

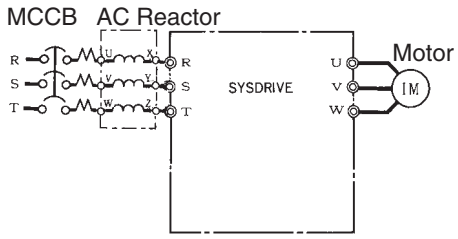

Applicable Range

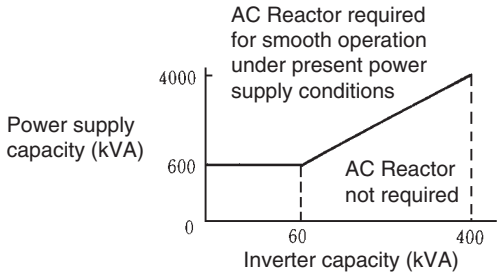

Applicable Models and Dimensions

200-V Class

Max. applicable motor capacity (kW)	Current (A)	Inductance (mH)
0.1 to 0.2	2	7.0
0.4	2.5	4.2
0.75	5	2.1
1.5	10	1.1
2.2	15	0.71
4.0	20	0.53

400-V Class

Max. applicable motor capacity (kW)	Current (A)	Inductance (mH)
0.2 to 0.4	1.3	18.0
0.75	2.5	8.4
1.5	5	4.2
2.2	7.5	3.6
4.0	10	2.2

9-3 Option Specifications

9-3-1 EMC-compatible Noise Filter

- Be sure to select an optimum Noise Filter from the following so that the Inverter will satisfy EMC directive requirements of the EC Directives.
- Connect the Noise Filter between the power supply and the input terminals (R/L1, S/L2, and T/L3) of the Inverter.
- The Inverter can be mounted to the upper side of the Noise Filter because the upper side of the Noise Filter incorporates mounting holes for the Inverter.

Standard Specifications

Noise Filters for 3-phase 200 V AC Inverter Models

Inverter	Noise Filter for 3-phase 200 V AC Inverter models			
Model CIMR-J7AZ-	**Schaffner**	**Rasmi**	**Rated current (A)**	**Weight (kg)**
20P1/20P2/20P4/20P7	3G3JV-PFI2010-SE	3G3JV-PFI2010-E	10	0.68
21P5/22P2	3G3JV-PFI2020-SE	3G3JV-PFI2020-E	16	0.84
24P0	---	3G3JV-PFI2030-E	26	1.0

Noise Filters for Single-phase 200 V AC Inverter Models

Inverter	Noise Filter for single-phase 200 V AC Inverter models			
Model CIMR-J7AZ-	**Schaffner**	**Rasmi**	**Rated current (A)**	**Weight (kg)**
B0P1/B0P2/B0P4	3G3JV-PFI1010-SE	3G3JV-PFI1010-E	10	0.45
B0P7/B1P5	3G3JV-PFI1020-SE	3G3JV-PFI1020-E	20	0.68

Nois Filters for 3-phase 400 V AC Inverter Models

Inverter	Noise Filter for 3-phase 200 V AC Inverter models				
Model CIMR-J7AZ-	**Schaffner**	**Rasmi**	**Rated current (A)**		**Weight (kg)**
			Schaffner	**Rasmi**	
A4002/A4004	3G3JV-PFI3005-SE	3G3JV-PFI3005-E	5		0.57
A4007/A4015/A4022	3G3JV-PFI3010-SE	3G3JV-PFI3010-E	10		0.67
A4037	3G3JV-PFI3020-SE	3G3JV-PFI3020-E	20	15	1.0

Connection Example

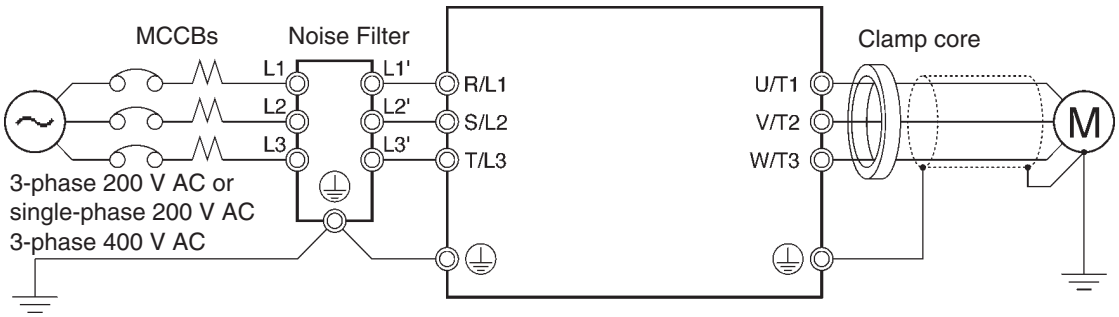

External Dimensions

Filters

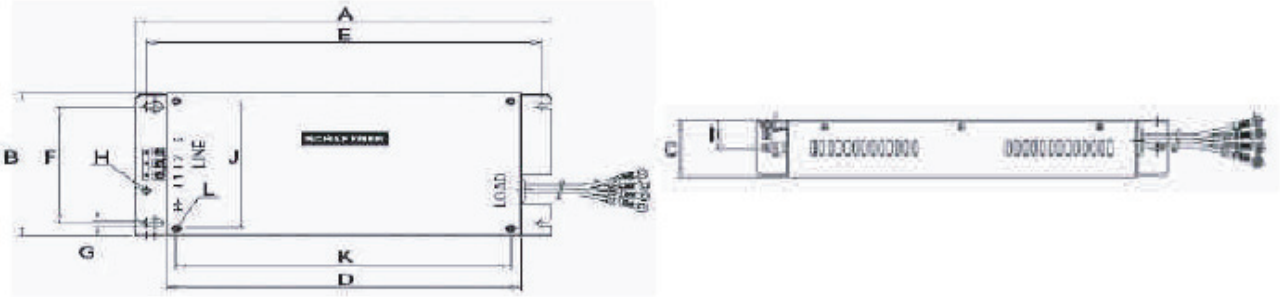

Schaffner model		Dimensions											
		A	B	C	D	E	F	G	H	I	J	K	L
3 x 200 V	3G3JV-PFI2010-SE	194	82	50	160	181	62	5.3	M5	25	56	118	M14
	3G3JV-PFI2020-SE	169	111	50	135	156	91	5.5	M5	25	96	118	M4
1 x 200 V	3G3JV-PFI1010-SE	169	71	45	135	156	51	5.3	M5	22	56	118	M4
	3G3JV-PFI1020-SE	169	111	50	135	156	91	5.3	M5	25	96	118	M4
3 x 400 V	3G3JV-PFI3005-SE	169	111	50	135	156	91	5.3	M5	22	96	118	M4
	3G3JV-PFI3010-SE	169	111	50	135	61	120	5	M5	28	128	118	M4
	3G3JV-PFI3020-SE	174	144	50	135	61	120	5	M5	28	128	118	M4

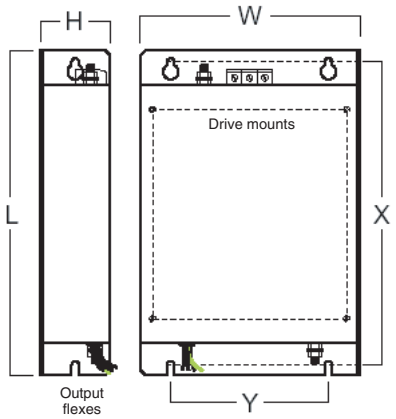

Rasmi model		Dimensions					
		W	H	L	X	Y	Inverter fixing
3 x 200 V	3G3JV-PFI2010-E	82	50	194	181	62	M5
	3G3-JV-PF2020-E	111	50	169	156	91	M5
	3G3JV-PFI2030-E	144	50	174	161	120	M5
1 x 200 V	3G3-JV-PFI1010-E	71	45	169	156	51	M5
	3G3-JVPFI1020-E	111	50	169	156	91	M5
3 x 400 V	3G3JV-PFI3005-E	111	50	169	156	91	M5
	3G3JV-PFI3010-E	111	50	169	156	91	M5
	3G3JV-PFI3020-E	144	50	174	161	120	M5

CHAPTER 10
List of Parameters

List of Parameters 146

Parameter No. (Register No. (Hex))	Name	Description	Setting range	Unit of setting	Default setting	Changes during operation	Reference page
n01 (0101)	Parameter write-prohibit selection/ parameter initialization	Used to prohibit parameters to be written, sets parameters, or change the monitor range of parameters. Used to initialize parameters to default values. 0: Sets or monitors parameter n01. Parameters n02 through n79 can be monitored only. 1: Sets or monitors parameters n01 through n79. 6: Clears the error log. 8: Initializes parameters to default values in 2-wire sequence. 9: Initializes parameters to default values in 3-wire sequence.	0, 1, 6, 8, 9	1	1	No	5-2
n02 (0102)	Operation command selection	Used to select the input method for the RUN and STOP commands in remote mode. 0: The RUN and STOP/RESET Keys on the Digital Operator are enabled. 1: Multi-function inputs through the control circuit terminals in 2- or 3-wire sequence. 2: Operation commands via RS-422A/ 485 communications are enabled. **Note** The RUN command only through key sequences on the Digital Operator is acceptable in local mode.	0 to 2	1	0	No	5-7
n03 (0103)	Frequency reference selection	Used to set the input method for the frequency reference in remote mode. 0: Digital Operator 1: Frequency reference 1 (n21) 2: Frequency reference control circuit terminal (0 to 10 V) 3: Frequency reference control circuit terminal (4 to 20 mA) 4: Frequency reference control circuit terminal (0 to 20 mA) 6: Frequency reference via RS-422A/ 485 communications	0 to 4, 6	1	0	No	5-8
n04 (0104)	Interrup-tion mode selection	Used to set the stopping method for use when the STOP command is input. 0: Decelerates to stop in preset time. 1: Coasts to stop (with output shut off by the STOP command)	0, 1	1	0	No	5-16
n05 (0105)	Reverse rotation-prohibit selection	Used to select the operation with the reverse command input. 0: Reverse enabled. 1: Reverse disabled.	0, 1	1	0	No	5-15
n06 (0106)	STOP/ RE-SET Key function selection	Used to select the stop method in remote mode with n02 for operation mode selection set to 1. 0: STOP/RESET Key of the Digital Operator enabled. 1: STOP/RESET Key of the Digital Operator disabled.	0, 1	1	0	No	5-7

Parameter No. (Register No. (Hex))	Name	Description	Setting range	Unit of setting	Default setting	Changes during operation	Reference page
n07 (0107)	Frequency selection in local mode	Used to set the input method for the frequency reference in local mode. 0: The FREQ adjuster of the Digital Operator enabled. 1: Key sequences on the Digital Operator enabled.	0, 1	1	0	No	5-8
n08 (0108)	Key sequential frequency setting	Used to enable the Enter Key for setting the frequency reference with the Increment and Decrement Keys. 0: The value is entered with the Enter Key pressed. 1: The value is enabled when the value is input.	0, 1	1	0	No	5-12
n09 (0109)	Maximum frequency (FMAX)	Used to set the V/f pattern as the basic characteristic of the Inverter with output voltage per frequency set. 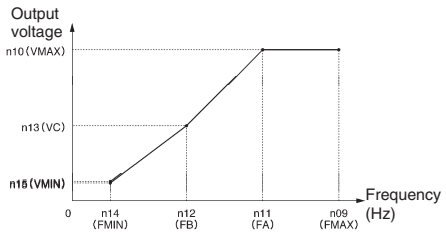 **Note** Set the parameters so that the following condition will be satisfied. n14 ≦ 012 < n11 ≦ n09 **Note** The value set in n13 will be ignored if parameters n14 and n12 are the same in value.	50.0 to 400	0.1 Hz (see note 1)	60.0	No	5-4
n10 (010A)	Maximum voltage (VMAX)		1 to 255 (see note 2)	1 V	200 (see note 2)	No	5-4
n11 (010B)	Maximum voltage frequency (FA)		0.2 to 400	0.1 Hz (see note 1)	60.0	No	5-4
n12 (010C)	Middle output frequency (FB)		0.1 to 399	0.1 Hz (see note 1)	1.5	No	5-4
n13 (010D)	Middle output frequency voltage (VC)		1 to 255 (see note 2)	1 V	12 (see note 2)	No	5-4
n14 (010E)	Minimum output frequency (FMIN)		0.1 to 10.0	0.1 Hz	1.5	No	5-4
n15 (010F)	Minimum output frequency voltage (VMIN)		1 to 50 (see note 2)	1 V	12.0 (see note 2)	No	5-4
n16 (0110)	Accelera-tion time 1	Acceleration time: The time required to go from 0% to 100% of the maximum frequency. Deceleration time: The time required to go from 100% to 0% of the maximum frequency. **Note** The actual acceleration or deceleration time is obtained from the following formula. Acceleration/Deceleration time = (Acceleration/Deceleration time set value) × (Frequency reference value) ÷ (Max. frequency)	0.0 to 999	0.1 s	10.0	Yes	5-13
n17 (0111)	Decelera-tion time 1				10.0	Yes	5-13
n18 (0112)	Accelera-tion time 2				10.0	Yes	5-13
n19 (0113)	Decelera-tion time 2				10.0	Yes	5-13

Parameter No. (Register No. (Hex))	Name	Description	Setting range	Unit of setting	Default setting	Changes during operation	Reference page
n20 (0114)	S-shape accelera-tion/ decel-eration character-istic	Used to set S-shape acceleration/ deceleration characteristics. 0: No S-shape acceleration/deceleration (trapezoidal acceleration/deceleration) 1: S-shape acceleration/deceleration characteristic time 0.2 s 2: S-shape acceleration/deceleration characteristic time 0.5 s 3: S-shape acceleration/deceleration characteristic time 1.0 s **Note** When the S-shape acceleration/ deceleration characteristic time is set, the acceleration and deceleration times will be lengthened according to the S-shape at the beginning and end of acceleration/deceleration.	0 to 3	1	0	No	5-14
n21 (0115)	Frequency reference 1	Used to set internal frequency references **Note** Frequency reference 1 is enabled in remote mode with n03 for frequency reference selection set to 1. **Note** These frequency references are selected with multi-step speed references (multi-function input). See the reference pages for the relationship between multi-step speed references and frequency references.	0.0 to max. fre-quency	0.1 Hz (see note 1)	6.0	Yes	5-10
n22 (0116)	Frequency reference 2				0.0	Yes	5-10
n23 (0117)	Frequency reference 3				0.0	Yes	5-10
n24 (0118)	Frequency reference 4				0.0	Yes	5-10
n25 (0119)	Frequency reference 5				0.0	Yes	5-10
n26 (011A)	Frequency reference 6				0.0	Yes	5-10
n27 (011B)	Frequency reference 7				0.0	Yes	5-10
n28 (011C)	Frequency reference 8				0.0	Yes	5-11
n29 (011D)	Inching frequency command	Used to set the inching frequency command. **Note** The inching frequency command is selected with the inching command (multi-function input). The inching frequency command takes precedence over the multi-step speed reference.			6.0	Yes	5-11
n30 (011E)	Frequency reference upper limit	Used to set the upper and lower frequency reference limits in percentage based on the maximum frequency as 100%. **Note** If n31 is set to a value less than the minimum output frequency (n14), the Inverter will have no output when a frequency reference less than the minimum output frequency input is input.	0 to 110	1%	100	No	5-9
n31 (011F)	Frequency reference lower limit		0 to 110	1%	0	No	5-9
n32 (0120)	Rated motor current	Used to set the rated motor current for motor overload detection (OL1) based on the rated motor current. **Note** Motor overload detection (OL1) is disabled by setting the parameter to 0.0. **Note** The rated motor current is default to the standard rated current of the maximum applicable motor.	0.0 to 120% of rated output current of the Inverter .	0.1 A	Varies with the capac-ity.	No	5-2

Parameter No. (Register No. (Hex))	Name	Description	Setting range	Unit of setting	Default setting	Changes during operation	Reference page
n33 (0121)	Motor protection characteristics	Used to set the motor overload detection (OL1) for the electronic thermal characteristics of the motor. 0: Protection characteristics for general-purpose induction motors 1: Protection characteristics for inverter-dedicated motors 2: No protection **Note** If a single Inverter is connected to more than one motor, set the parameter to 2 for no protection. The parameter is also disabled by setting n32 for rated motor to 0.0.	0 to 2	1	0	No	6-14
n34 (0122)	Motor protective time setting	Used to set the electric thermal characteristics of the motor to be connected in 1-minute increments. **Note** The default setting does not require any changes in normal operation. **Note** To set the parameter according to the characteristics of the motor, check with the motor manufacturer the thermal time constant and set the parameter with some margin. In other words, set the value slightly shorter than the thermal time constant. **Note** To detect motor overloading quicker, reduce the set value, provided that it does not cause any application problems.	1 to 60	1 min	8	No	6-14
n35 (0123)	Cooling fan operation function	Used to operate the Cooling Fan of the Inverter while the Inverter is turned on or only while the Inverter is in operation. 0: Rotates only while RUN command is input and for 1 minute after Inverter stops operating 1: Rotates while Inverter is turned on **Note** This parameter is available only if the Inverter incorporates a Cooling Fan. **Note** If the operation frequency of the Inverter is low, the life of the fan can be prolonged by setting the parameter to 0.	0, 1	1	0	No.	6-14
n36 (0124)	Multi-function input 1 (Input terminal S2)	Used to select the function of multi-function input terminals S2 through S5. **Set value** / **Function** / **Description**	2 to 8, 10 to 22	1	2	No	5-17
n37 (0125)	Multi-function input 2 (input terminal S3)	0 / Forward/ Reverse rotation command / 3-wire sequence (to be set in n37 only) By setting n37 to 0, the set value in n36 is ignored and the following setting are forcibly made. S1: RUN input (RUN when ON) S2: STOP input (STOP whenn OFF) S3: Forward/Reverse rotation command (OFF: Forward; ON: Reverse)	0, 2 to 8, 10 to 22	1	5	No	5-17
n38 (0126)	Multi-function input 3 (Input terminal S4)		2 to 8, 10 to 22	1	3	No	5-17

Parameter No. (Register No. (Hex))	Name	Description			Setting range	Unit of setting	Default setting	Changes during operation	Reference page
n39 (0127)	Multi-function input 4 (Input terminal S5)	2	Reverse/ Stop	Reverse rotation command in 2-wire sequence (Reversed with the terminal turned ON)	2 to 8, 10 to 22, 34, 35	1	6	No	5-17
		3	External fault (NO)	ON: External fault (FP□ detection: □ is a terminal number)					
		4	External fault (NC)	OFF: External fault (EF□ detection: □ is a terminal number)					
		5	Fault reset	ON: Fault reset (disabled while RUN command is input)					
		6	Multi-step speed reference 1	Signals to select freqency references 1 through 8. Refer to *5-5-4 Setting Frequency References through Key Sequences* for the relationship between multi-step speed references and frequency references.					
		7	Multi-step speed reference 2						
		8	Multi-step speed reference 3						
		10	Inching frequency command	ON: Inching frequency command (taking precedence over the multi-step speed reference)					
		11	Acceleration/Deceleration time changeover	ON: Acceleration time 2 and deceleration time 2 are selected.					
		12	External base block command (NO)	ON: Output shut off (while motor coasting to a stop and “bb” flashing)					
		13	External base block bommand (NC)	OFF: Output shut off (with motor free running and “bb” flashing)					
		14	Search command (Searching starts from maximum frequency)	ON: Speed search (Searching starts from n09)					
		15	Search command (Searching starts from preset frequency)	ON: Speed search					
		16	Acceleration/Deceleration prohibit command	ON: Acceleration/ Deceleration is on hold (running at parameter frequency)					
		17	Local or remote selection	ON: Local mode (operated with the Digital Operator)					

Parameter No. (Register No. (Hex))	Name	Description			Setting range	Unit of setting	Default setting	Changes during operation	Reference page
n39 (0127)	Multi-function input 4 (input terminal S5)	18	Communications or remote selection	ON: RS-422A/485 communications input is enabled. OFF: The settings of n02 and n03 are enabled.	2 to 8, 10 to 22, 34, 35	1	6	No	5-17
		19	Emergency stop fault (NO)	The Inverter stops according to the setting in n04 for interruption mode selection with the emergency stop input turned ON. NO. Emergency stop with the contact closed. NC: Emergency stop with the contact opened. Fault: Fault output is ON and reset with RESET input. Alarm output is ON (no reset required). “STP“ is displayed (lit with fault input ON and flashed with alarm input ON)					
		20	Emergency stop alarm (NO)						
		21	Emergency stop fault (NC)						
		22	Emergency stop alarm (NC)						
		34	Up or down command	Up or down command (set in n39 only) By setting n39 to 34, the set value in n38 is ignored and the following setting are forcibly mde. S4: Up command S5: Down command					
		35	Self-diagnostic test	ON: RS-422A/485 communications self-diagnostic test (set in n39 only)					

Parameter No. (Register No. (Hex))	Name	Description			Setting range	Unit of setting	Default setting	Changes during operation	Reference page
n40 (0128)	Multi-function output (MA/MB and MC output terminals)	Used to select the functions of multi-function output terminals.			0 to 7, 10 to 17	1	1	No	5-20
		Set value	**Function**	**Description**					
		0	Fault output	ON: Fault output (with protective function working)					
		1	Operation in progress	ON: Operation in progress					
		2	Frequency detection ´	ON: Frequency detection (with frequency reference coinciding with output frequency)					
		3	Idling	ON: Idling (at less than min. output frequency)					
		4	Frequency detection 1	ON: Output frequency ≧ frequency detection level (n58)					
		5	Frequency detection 2	ON: Output frequency ≦ frequency detection level (n58)					
		6	Overtorque being monitored (NO-contact output)	Output if any of the following parameter conditions is satisfied. n59: Overtorque detection function selection n60: Overtorque detection level n61: Overtorque detection time NO contact: ON with overtorque being detected NC contact: OFF with overtorque being detected					
		7	Overture being monitored (NC-contact output)						
		8	Not used	---					
		9							
		10	Alarm output	ON: Alarm being detected (Nonfatal error being detected)					
		11	Base block in progress	Base block in progress (in operation with output shut-off)					
		12	RUN mode	ON: Local mode (with the Digital Operator)					
		13	Inverter ready	ON: Inverter ready to operate (with no fault detected)					
		14	Fault retry	ON: Fault retry					
		15	UV in progress	ON: Undervoltage being monitored					

Parameter No. (Register No. (Hex))	Name	Description	Setting range	Unit of setting	Default setting	Changes during operation	Reference page
n40 (0128)	Multi-function output (MA/MB and MC output terminals)	16: Rotating in reverse direction — ON: Rotating in reverse direction 17: Speed search in progress — ON: Speed search in progress	0 to 7, 10 to 17	1	1	No	5-20
n41 (0129)	Frequency reference gain	Used to the input characteristics of analog frequency references. Gain: The frequency of maximum analog input (10 V or 20 mA) in percentage based on the maximum frequency as 100%. Bias: The frequency of minimum analog input (0 V or 4 mA) in percentage based on the maximum frequency as 100%.	0 to 255	1%	100	Yes	5-9
n42 (012A)	Frequency reference bias		–99 to 99	1%	0	Yes	5-9
n43 (012B)	Analog frequency reference time		0.00 to 2.00	0.01 s	0.10	No	5-10
n44 (012C)	Analog monitor output	Used to set the output frequency or current as a monitored item. 0: Output frequency (10-V output at max. frequency with n45 set to 1.00). 1: Output current (10-V output with Inverter rated output current with n45 set to 1.00)	0, 1	1	0	No	5-22
n45 (012D)	Analog monitor output gain	Used to set the output characteristics of analog monitor output.	0.00 to 2.00	0.01	1.00	Yes	5-22
n46 (012E)	Carrier frequency selection	Used to set the carrier frequency. **Note** The default setting does not need and changes in normal operation. **Note** Refer to *6-1 Setting the Carrier Frequency* for details.	1 to 4, 7 to 9	1	Varies with the capacity	No	6-2
n47 (012F)	Momentary power interruption compensation	Used to specify the processing that is performed when a momentary power interruption occurs. 0: Inverter stops operating 1: Inverter continues operating if power interruption is 0.5 s or less. 2: Inverter restarts when power is restored.	0 to 2	1	0	No	6-15
n48 (0130)	Fault retry	Used to set the number of times the Inverter is reset and restarted automatically in the case the Inverter has an overvoltage fault, overcurrent fault, or ground fault.	0 to 10	1	0	No	6-15
n49 (0131)	Jump frequency 1	Used to set the frequency jump function. 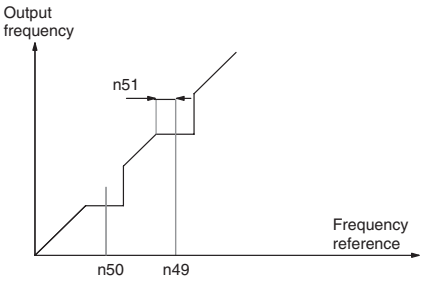 **Note** These values must satisfy the following condition: n49 ≧ n50	0.0 to 400	0.1 Hz (see note 1)	0.0	No	6-16
N50 (0132)	Jump frequency 2		0.0 to 400	0.1 Hz (see note 1)	0.0	No	6-16
n51 (0133)	Jump width		0.0 to 25.5	0.1 Hz	0.0	No	6-16

Parameter No. (Register No. (Hex))	Name	Description	Setting range	Unit of setting	Default setting	Changes during operation	Reference page
n52 (0134)	DC control current	Used to impose DC on the induction motor for braking control. Set the DC braking current in percentage based on the rated current of the Inverter as 100%. 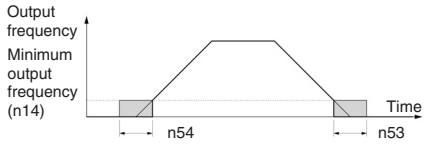	0 to 100	1%	50	No	6-5
n53 (0135)	Interruption DC control time		0.0 to 25.5	0.1 s	0.5	No	6-5
n54 (0136)	Startup DC control time		0.0 to 25.5	0.1 s	0.0	No	6-5
n55 (0137)	Stall prevention during deceleration	Used to select a function to change the deceleration time of the motor automatically so that there will be no overvoltage imposed on the motor during deceleration. 0: Stall prevention during deceleration enabled 1: Stall prevention during deceleration disabled	0, 1	1	0	No	6-6
n56 (0138)	Stall prevention level during acceleration	Used to select a function to stop the acceleration of the motor automatically for stall prevention during acceleration. Set the level in percentage based on the rated current of the Inverter as 100%.	30 to 200	1%	170	No	6-7
n57 (0139)	Stall prevention leven during operation	Used to select a function to reduce the output frequency of the Inverter automatically for stall prevention during operation. Set the level in percentage based on the rated current of the Inverter as 100%.	30 to 200	1%	160	No	6-8
n58 (013A)	Frequency detection level	Used to set the frequency to be detected. **Note** The parameter n40 for multi-function output must be set for the output of frequency detection levels 1 and 2.	0.0 to 400	0.1 Hz	0.0	No	6-18
n59 (013B)	Overtorque detection function selection	Used to enable or disable overtorque detection and select the processing method after overtorque detection. 0: Overtorque detection disabled 1: Overtorque detection only when speed coincides and operation continues (issues alarm) 2: Overtorque detection only when speed coincides and output shut off (for protection) 3: Overtorque always detected and operation continues (issues alarm) 4: Overtorque always detected and output shut off (for protection)	0 to 4	1	0	No	6-9
060 (013C)	Overtorque detection level	Used to set overtorque detection level. Set the level in percentage based on the rated current of the Inverter as 100%.	30 to 200	1%	160	No	6-9
061 (013D)	Overtorque detection time	Used to set the detection time of overtorque	0.1 to 10.0	0.1 s	0.1	No	6-10

Parameter No. (Register No. (Hex))	Name	Description	Setting range	Unit of setting	Default setting	Changes during operation	Reference page
062 (013E)	UP/DOWN command frequency memory	Used to store the adjusted frequency reference with the UP/DOWN function. 0: Frequency not stored 1: Frequency stored The frequency must be on hold for 5 s or more. Used to store the adjusted frequency reference with the UP/DOWN function. 0: Frequency not stored 1: Frequency store The frequency must be on hold for 5 s or more. Used to store the adjusted frequency reference with the UP/DOWN function. 0: Frequency not stored 1: Frequency stored The frequency must be on hold for 5 s or more.	0, 1	1	0	No	6-19
n63 (013F)	Torque compensation gain	Used to set the gain of the torque compensation function. The default setting does not need any changes in normal operation.	0.0 to 2.5	0.1	1.0	Yes	6-11
n64 (0140)	Motor rated slip	Used to set the rated slip value of the motor in use. **Note** Used as the constant of the slip compensation function.	0.0 to 20.0	0.1 Hz	Varies with the capacity.	Yes	6-12
n65 (0141)	Motor no-load current	Used to set the no-load current of the motor in use based on the rated motor current as 100%. **Note** Used as the constant of the slip compensation function.	0 to 99	1%	Varies with the capacity.	No	6-12
n66 (0142)	Slip compensation gain	Used to set the gain of the slip compensation function. **Note** The slip compensation function is disabled with n66 set to 0.0.	0.0 to 2.5	0.1	0.0	Yes	6-12
n67 (0143)	Slip compensation time constant	Used for the response speed of the slip compensation function. **Note** The default setting does not need any changes in normal operation	0.0 to 25.5	0.1 s	2.0	No	6-12
n68 (0141) (See note 3.)	RS-422A/485 communications timeover detection selection	Used to set whether a communications time-over (CE) is detected if there is an interval of more than 2 s, and to select the method of processing the detected communications time-over. 0: Detects a time-over and fatal error and coasts to a stop. 1: Detects a time-over and fatal error and decelerates to a stop in deceleration time 1. 2: Detects a time-over and fatal error and decelerates to a stop in deceleration time 2. 3: Detects a time-over and nonfatal error warning and continues operating. 4: No time-over is detected.	0 to 4	1	0	No	7-5

Parameter No. (Register No. (Hex))	Name	Description	Setting range	Unit of setting	Default setting	Changes during operation	Reference page
n69 (0145) (See note 3.)	RS-422A/485 communications frequency reference/ display unit selection	Used to the set the unit of frequency reference and frequency-related values to be set or monitored through communications. 0: 0.1 Hz 1: 0.01 Hz 2: Converted value based on 30,000 as max. frequency 3: 0.1% (Max. frequency: 100%)	0 to 3	1	0	No	7-5
n70 (0146) (See note 3.)	RS-422A/485 communications Slave address	Used to set the Slave address (Slave unit number) for communications. 0: Only receives broadcast messages from the Master. 01 to 32: Slave address	00 to 32	1	00	No	7-6
n71 (0147) (See note 3.)	RS-422A/485 baud rate selection	Used to set the baud rate for communications. 0: 2,400 bps 1: 4,800 bps 2: 9,600 bps 3: 19,200 bps	0 to 3	1	2	No	7-6
n72 (0148) (See note 3.)	RS-422A/485 parity selection	Used to set the parity for communications. 0: Even parity 1: Odd parity 2: No parity	0 to 2	1	0	No	7-7
n73 (0149) (See note 3.)	RS-422A/485 send wait time	Used to set the waiting period for returning a response after the DSR (data-send-request) mes-sage is received from the Master.	10 to 65	1 ms	10	No	7-7
n74 (014A) (See note 3.)	RS-422A/485 RTS control selection	Select whether or not to enable the RTS (request-to-send) communications control function.	0, 1	1	0	No	7-7
n75 (014B)	Low-speed carrier frequency reduction selec-tion	Used to select a function to reduce the carrier frequency when Inverter is at low speed. 0: Function disabled 1: Function enabled **Note** Normally set n75 to 0.	0.1	1	0	No	6-4
n76 (014C) (See note 3.)	Parameter copy and verify function	Selects the function to read, copy, and verify the parameter between the memory of the Inverter and that of the Digital Operator. rdy: Ready to accept the next command. rED: Reads the Inverter parameter. Cpy: Copies the parameter to the Inverter. vFY: Verifies the Inverter parameter. vA: Checks the Inverter capacity display. Sno: Checks the software number.	rdy to Sno	---	rdy	No	---
n77 (014D) (See note 3.)	Parameter read prohibit selection	Select the copy-prohibit function. Use this parameter to protect the data in the EEPROM of the Digital Operator. 0: Read prohibited for Inverter parameters. (Data cannot be written to EEPROM.) 1: Read possible for Inverter parameters. (Data can be written to EEPROM.)	0, 1	1	0	No	---

Parameter No. (Register No. (Hex))	Name	Description	Setting range	Unit of setting	Default setting	Changes during operation	Reference page
n78 (014E)	Error log	Used to display the latest error recorded. Uu 1 Display **Note** „:___“ will be displayed if no error has been recorded. **Note** This parameter is monitored only.	---	---	---	---	6-21
n79 (014F)	Software number	Used to display the software number of the Inverter for OMRON's control reference use. **Note** This parameter is monitored only.	---	---	---	---	---

Note
1. Values will be set in 0.1-Hz increments if the frequency is less than 100 Hz and 1-Hz increments if the frequency is 100 Hz or over. With RS-422/485 communications, the unit is always 0.1 Hz.
2. With 400-V Inverters, the values for the upper limit of setting ranges and the default settings will be twice those given in the above table.
3. The n68, n74, n76, and n77 parameters cannot be written via RS422/485 communications. They are read-only.

CHAPTER 11
Using the Inverter for a Motor

Using the Inverter for a Motor. 160

Using Inverter for Existing Standard Motor

When a standard motor is operated with the Inverter, a power loss is lightly higher than when operated with a commercial power supply.

In addition, cooling effects also decline the low-speed range, resulting in an increase in the motor temperature. Therefore, motor torque should be reduced in the low speed range.

The following figure shows allowable load characteristics of a standard motor.

If 100% torque is continuously required in the low-speed range, use a special motor for use with Inverters.

Allowable Load Characteristics of Standard Motor

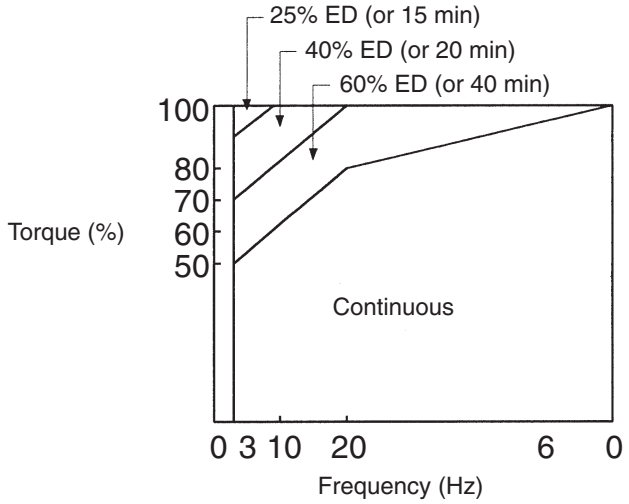

High-speed Operation

When using the motor at high-speed (60 Hz or more), problems may arise in dynamic balance and bearing durability.

Torque Characteristics

The motor may require more acceleration torque when the motor is operated with the Inverter than when operated with a commercial power supply. Check the load torque characteristics of the machine to be used with the motor to set a proper V/f pattern.

Vibration

The J7AZ Series employs high carrier PWM control to reduce motor vibration. When the motor is operated with the Inverter, motor vibration is almost the same as when operated with a commercial power supply.

Motor vibration may, however, become greater in the following cases.

- Resonance with the natural frequency of the mechanical system

  Take special care when a machine that has been operated at a constant speed is to be operated in variable speed mode.

  If resonance occurs, install vibration-proof rubber on the motor base.
- Imbalance rotor

  Take special care when the motor is operated at a high speed (60 Hz or more).

Noise

Noise is almost the same as when the motor is operated with a commercial power supply. Motor noise, however, becomes louder when the motor is operated at a speed higher than the rated speed (60 Hz).

H Using Inverter for Special Motors

Pole-changing Motor

The rated input current of pole-changing motors differs from that of standard motors. Select, therefore, an appropriate Inverter according to the maximum input current of the motor to be used.

Before changing the number of poles, always make sure that the motor has stopped.

Otherwise, the overvoltage protective or overcurrent protective mechanism will be actuated, resulting in an error.

Submersible Motor

The rated input current of submersible motors is higher than that of standard motors. Therefore, always select an Inverter by checking its rated output current.

When the distance between the motor and Inverter is long, use a cable thick enough to connect the motor and Inverter to prevent motor torque reduction.

Explosion-proof Motor

When an explosion-proof motor or increased safety-type motor is to be used, it must be subject to an explosion-proof test in conjunction with the Inverter. This is also applicable when an existing explosionproof motor is to be operated with the Inverter.

Gearmotor

The speed range for continuous operation differs according to the lubrication method and motor manufacturer. In particular, the continuous operation of an oil-lubricated motor in the low speed range may result in burning. If the motor is to be operated at a speed higher than 60 Hz, consult with the manufacturer.

Synchronous Motor

A synchronous motor is not suitable for Inverter control.

If a group of synchronous motors is individually turned on and off, synchronism may be lost.

Single-phase Motor

Do not use the Inverter for a single-phase motor.

The motor should be replaced with a 3-phase motor.

Power Transmission Mechanism (Speed Reducers, Belts, and Chains)

If an oil-lubricated gear box or speed reducer is used in the power transmission mechanism, oil lubrication will be affected when the motor operates only in the low speed range. The power transmission mechanism will make noise and experience problems with service life and durability if the motor is operated at a speed higher than 60 Hz.

Motor Burnout Caused by Insufficient Dielectric Strength of Each Phase of Motor

Surge occurs among the phases of the motor when the output voltage is switched.

If the dielectric strength of each phase of the motor is insufficient, the motor may burn out.

The dielectric strength of each phase of the motor must be higher than the maximum surge voltage. Normally, the maximum surge voltage is approximately three times the power voltage imposed on the Inverter.

Revision History

A manual revision code appears as a suffix to the catalog number on the front cover of the manual.

Cat. No. I63-EN-01

Revision code

The following table outlines the changes made to the manual during each revision. Page numbers refer to the previous version.

Revision code	Date	Revised content
01	February 2006	Original production

OMRON YASKAWA MOTION CONTROL B.V. – Wegalaan 65 – 2132 JD Hoofddorp – The Netherlands
phone: +31 (0) 23 568 74 00 – fax: +31 (0) 23 568 74 88 – www.omronyaskawa.com

Note: Specifications subject to change without notice.
Manual No. I63-EN-01