Quantum with Unity Pro

Hardware
Reference Manual

05/2010

35010529.07

www.schneider-electric.com

Schneider Electric

The information provided in this documentation contains general descriptions and/or technical characteristics of the performance of the products contained herein. This documentation is not intended as a substitute for and is not to be used for determining suitability or reliability of these products for specific user applications. It is the duty of any such user or integrator to perform the appropriate and complete risk analysis, evaluation and testing of the products with respect to the relevant specific application or use thereof. Neither Schneider Electric nor any of its affiliates or subsidiaries shall be responsible or liable for misuse of the information contained herein. If you have any suggestions for improvements or amendments or have found errors in this publication, please notify us.

No part of this document may be reproduced in any form or by any means, electronic or mechanical, including photocopying, without express written permission of Schneider Electric.

All pertinent state, regional, and local safety regulations must be observed when installing and using this product. For reasons of safety and to help ensure compliance with documented system data, only the manufacturer should perform repairs to components.

When devices are used for applications with technical safety requirements, the relevant instructions must be followed.

Failure to use Schneider Electric software or approved software with our hardware products may result in injury, harm, or improper operating results.

Failure to observe this information can result in injury or equipment damage.

© 2010 Schneider Electric. All rights reserved.

Document Set

Presentation

This package contains the following manuals:

- Quantum Hardware Reference Manual
- Quantum Discrete and Analog I/O Reference Manual
- Quantum Experts and Communication Reference Manual
- Grounding and Electromagnetic Compatibility of PLC Systems User Manual
- Quantum Series 800 I/O Reference Manual

Table of Contents

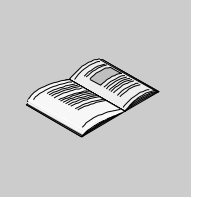

Safety Information **13**
About the Book **15**
Part I Introduction **17**
Chapter 1 System **19**
System Overview 20
Typical Quantum System Configuration 21
Chapter 2 System Components **23**
Controller Modules (CPUs) 24
Power Supply Modules (CPS) 25
I/O Modules 26
Network Interface Modules 27
Intelligent/Special Purpose I/O Modules 29
Simulator (XSM) and Battery (XCP) Module 30
Racks (XBP) and Rack Expander (XBE) 31
CableFast Cabling (CFx) for I/O Modules 32
Hot Standby System 33
Chapter 3 Network Support **35**
3.1 General Information 36
Supported Networks Table 37
Quantum Network Interface Techniques 39
3.2 Remote I/O (RIO) and Distributed I/O (DIO) 41
Remote I/O (RIO) 42
Execution of Quantum Sections with Remote Inputs/Outputs 43
Distributed I/O (DIO) 45
3.3 Ethernet Networking Interfaces 46
TCP/IP Ethernet 47
SY/MAX Ethernet 48
3.4 Modbus/Modbus Plus Networking Interfaces 49
General Information 50
Features 51
Modbus and Modbus Plus Services 52

3.5 Fieldbus Networking Interfaces 53
INTERBUS (NOA) 54
Profibus (CRP) 55
AS-i (EIA) 56
Sercos (MMS) 57
Chapter 4 Quantum Configurations 59
4.1 Quantum Local I/O, Remote I/O and Distributed I/O 60
Features 61
Local, RIO and DIO Configuration 62
4.2 Quantum Local I/O 63
Configuration 64
Example 65
4.3 Quantum Remote I/O (RIO) 66
Single-cable Configuration 67
Dual-cable Configuration 68
4.4 Quantum Distributed I/O (DIO) 69
Single-cable Configuration 70
Dual-cable Configuration 71
Chapter 5 Module Configuration 73
Mapping a Local Quantum I/O Station 74
Open the Parameter Configuration 75
Chapter 6 Hardware Installation and Maintenance 77
Space Requirements 78
Mounting Brackets 80
Mounting Quantum Modules 82
Mounting and Removing a Terminal Strip 86
Mounting Jumper Clips 88
Removing a Module Door 89
Part II Controller Modules (CPUs) 91
Chapter 7 General Information 93
CPU Overview 94
Machine Stop Codes 95
Chapter 8 Low End CPU 97
Presentation 98
Front Panel Switches 99
Rear Panel Switches 102
Key Switches 103
Modbus Connectors 106
Indicators 108
Processor Configuration Screen 111
140 CPU 311 10 Specifications 122
140 CPU 434 12A Specifications 124
140 CPU 534 14A/U Specifications 127
140 CPU 534 14B/U Specifications 130

Chapter 9 High End CPU 133
Physical Presentation and Mounting of Standard High End Modules 135
Standalone Safety CPU 137
Physical presentation and mounting of Hot StandBy High End modules . 139
Hot Standby Safety CPU Specifics 140
Controls and Displays 143
Indicators. 147
Modbus port 149
Using the LCD Display Screens 151
Processor Configuration Screen 162
140 CPU 651 50 Specifications. 164
140 CPU 651 60 Specifications. 167
140 CPU 651 60S Specifications 170
140 CPU 652 60 Specifications. 172
140 CPU 671 60 Specifications. 174
140 CPU 671 60S Specifications 177
140 CPU 672 61 Specifications. 179
Chapter 10 Memory Cards for High End CPU 181
Memory Cards for High End CPUs 182
Installing/Extracting PCMCIA Extension Cards on Advanced Quantum Processors 185
Changing the Batteries of a PCMCIA Memory Card. 188
Battery Lifetimes for the PCMCIA Memory Card. 192
Part III Power Supply Modules (CPS) 201
Chapter 11 General Information 203
Table of Power Supplies 204
System Design Considerations for Quantum Power Supplies 205
Compatibility 210
Presentation 212
Indicators. 213
Displaying the Power Supply Budget 214
Chapter 12 140 CPS 111 00: 115 ... 230 VAC Standalone 3 A Power Supply Module 217
140 CPS 111 00 Wiring Diagram 218
140 CPS 111 00 Specifications. 219
Chapter 13 140 CPS 111 00 (PV 01 or greater): 115 ... 230 VAC Standalone Power Supply Module 221
140 CPS 111 00 (PV 01 or greater) Wiring Diagram 222
140 CPS 111 00 (PV 01 or greater) Specifications. 223
Chapter 14 140 CPS 114 00: 115/230 VAC Standalone 8 A Power Supply Module 225
140 CPS 114 00 Wiring Diagram 226
140 CPS 114 00 Specifications. 227

Chapter 15 140 CPS 114 10: 115/230 VAC Standalone/Summable 8 A Power Supply Module 229
140 CPS 114 10 Wiring Diagram. 230
140 CPS 114 10 Specifications 231
Chapter 16 140 CPS 114 20: 115/230 VAC Standalone/Summable 11 A Power Supply Module 233
140 CPS 114 20 Wiring Diagram. 234
140 CPS 114 20 Specifications 235
Chapter 17 140 CPS 124 00: 115/230 VAC Standalone/Redundant 8 A Power Supply Module 237
140 CPS 124 00 Wiring Diagram. 238
140 CPS 124 00 Specifications 239
Chapter 18 140 CPS 124 20: 115/230 VAC Standalone/Redundant 11 A Power Supply Module 241
140 CPS 124 20 Wiring Diagram. 242
140 CPS 124 20 Specifications 243
Chapter 19 140 CPS 211 00: 24 VDC Standalone 3 A Power Supply Module 245
140 CPS 211 00 Wiring Diagram. 246
140 CPS 211 00 Specifications 247
Chapter 20 140 CPS 214 00: 24 VDC Standalone/Summable 7–8 A Power Supply Module 249
140 CPS 214 00 Wiring Diagram. 250
140 CPS 214 00 Specifications 251
Chapter 21 140 CPS 224 00: 24 VDC Standalone/Redundant 6–9 A Power Supply Module 253
140 CPS 224 00 Wiring Diagram. 254
140 CPS 224 00 Specifications 255
Chapter 22 140 CPS 414 00: 48 VDC Standalone/Summable 7–8 A Power Supply Module 257
140 CPS 414 00 Wiring Diagram. 258
140 CPS 414 00 Specifications 259
Chapter 23 140 CPS 424 00: 48 VDC Standalone/Redundant 6–9 A Power Supply Module 261
140 CPS 424 00 Wiring Diagram. 262
140 CPS 424 00 Specifications 263
Chapter 24 140 CPS 511 00: 125 VDC Standalone 3 A Power Supply Module 265
140 CPS 511 00 Wiring Diagram. 266
140 CPS 511 00 Specifications 267

Chapter 25	**140 CPS 524 00: 125 VDC Standalone/Redundant 8 A Power Supply Module**	**269**
	140 CPS 524 00 Wiring Diagram	270
	140 CPS 524 00 Specifications	271
Part IV	**Racks(XBP) and Rack Expander (XBE)**	**273**
Chapter 26	**Selecting Racks (XBP)**	**275**
	General Information	276
	140 XBP 002 00: Two Position Rack	277
	140 XBP 003 00: Three Position Rack	278
	140 XBP 004 00: Four Position Rack	279
	140 XBP 006 00: Six Position Rack	280
	140 XBP 010 00: Ten Position Rack	281
	140 XBP 016 00: Sixteen Position Rack	282
Chapter 27	**140 XBE 100 00: Rack Expander**	**283**
	General Information	284
	Presentation	286
	Operation Guidelines	287
	140 XBE 100 00 Specifications	289
Part V	**Simulator (XSM) and Battery (XCP) Module**	**291**
Chapter 28	**Simulator Modules (XSM)**	**293**
28.1	140 XSM 010 00: Two Channels In / One Channel Out Analog Simulator	294
	Presentation	295
	140 XSM 010 00 Wiring Diagram	296
	140 XSM 010 00 Specifications	297
28.2	140 XSM 002 00: 16 Point Discrete Input Simulator	298
	Presentation	298
Chapter 29	**140 XCP 900 00: Battery Module**	**299**
	Presentation	300
	140 XCP 900 00 Indicators	301
	Installation and Maintenance	302
	140 XCP 900 00 Specifications	304
Part VI	**Changing Configuration On The Fly**	**307**
Chapter 30	**CCOTF Presentation**	**309**
	Overview of the Modicon Quantum CCOTF with Unity System	309
Chapter 31	**CCOTF Compatibility**	**311**
31.1	Hardware Compatibility	312
	I/O Modules Compatibility	313
	CRA / CRP Management Compatibility	314
31.2	CCOTF Bus Compatibility	315
	CCOTF Bus Management Compatibility	315
Chapter 32	**Upgrade Procedure to Use CCOTF Function**	**317**
32.1	Overview of Upgrade Procedure	318
	General	318

32.2 Executing the CCOTF Upgrade Procedure 319
General 320
Changing the Hardware Modules 321
Upgrading the Firmware 324
Chapter 33 Using CCOTF 325
General 326
Add / Delete a Module in the Quantum Local Racks 332
Add / Delete a Module in the Quantum RIO Drop 336
Modify Module Parameters 340
Chapter 34 CCOTF Performance 343
Key Performance 343
Chapter 35 CCOTF Troubleshooting 345
General Troubleshooting List 345
Appendices 347
Appendix A Miscellaneous Components 349
Racks and Brackets Tables 350
Cables 351
Spare Parts Table 352
Illustrated Miscellaneous Components 353
Appendix B Power and Grounding Guidelines 361
General Information 362
Batteries as DC power supplies 364
AC Power and Grounding Considerations 365
DC Power and Grounding Considerations 369
Closed System Installation 373
Modbus Plus Termination and Grounding 375
Fiber Repeaters 378
Grounding of RIO Networks 380
Analog Grounding Consideration 382
Appendix C Field Wiring Terminal Strip / Module Keying Assignment 387
General Information 388
Illustration 389
Primary Keying 390
Secondary Keying 392
Appendix D CableFast Cabling 393
General Information 394
140 CFA 040 00 Quantum CableFast Cabling Block 401
140 CFB 032 00 Quantum CableFast Cabling Block 403
140 CFC 032 00 Quantum CableFast Cabling Block 406
140 CFD 032 00 Quantum CableFast Cabling Block 412
140 CFE 032 00 Quantum CableFast Cabling Block 414
140 CFG 016 00 Quantum CableFast Cabling Block 416
140 CFH 008 00 Quantum CableFast Cabling Block 421
140CFI00800 Quantum CableFast Cabling Block 425

140CFJ00400 Quantum CableFast Cabling Block 429
140CFK00400 Quantum CableFast Cabling Block 433
CableFast Cables 437
CableFast Accessories 442
Appendix E ConneXium Ethernet Cabling System 443
Introduction 444
Configuration 446
Appendix F Agency Approvals and Conformal Coating 449
Agency Approvals: Power Supply 450
Agency Approvals: CPU 451
Agency Approvals: I/O 452
Agency Approvals: DIO Drops 454
Agency Approvals: RIO Heads and Drops 455
Agency Approvals: Ethernet Modules 456
Agency Approvals: NOM 457
Agency Approvals: Motion Modules 458
Agency Approvals: Battery and Simulator Modules 459
Appendix G System Specifications 461
Mechanical and Electrical Specifications 462
Power Supply Specifications 463
I/O Module Specifications 464
Operating and Storage Conditions 465
Index 467

Safety Information

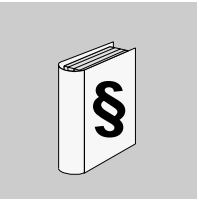

Important Information

NOTICE

Read these instructions carefully, and look at the equipment to become familiar with the device before trying to install, operate, or maintain it. The following special messages may appear throughout this documentation or on the equipment to warn of potential hazards or to call attention to information that clarifies or simplifies a procedure.

The addition of this symbol to a Danger or Warning safety label indicates that an electrical hazard exists, which will result in personal injury if the instructions are not followed.

This is the safety alert symbol. It is used to alert you to potential personal injury hazards. Obey all safety messages that follow this symbol to avoid possible injury or death.

⚠ DANGER

DANGER indicates an imminently hazardous situation which, if not avoided, **will result in** death or serious injury.

⚠ WARNING

WARNING indicates a potentially hazardous situation which, if not avoided, **can result in** death or serious injury.

⚠ CAUTION
CAUTION indicates a potentially hazardous situation which, if not avoided, **can result in** minor or moderate injury.

CAUTION
CAUTION, used without the safety alert symbol, indicates a potentially hazardous situation which, if not avoided, **can result in** equipment damage.

PLEASE NOTE

Electrical equipment should be installed, operated, serviced, and maintained only by qualified personnel. No responsibility is assumed by Schneider Electric for any consequences arising out of the use of this material.

A qualified person is one who has skills and knowledge related to the construction and operation of electrical equipment and the installation, and has received safety training to recognize and avoid the hazards involved.

About the Book

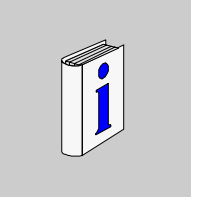

At a Glance

Document Scope

This documentation is a reference for the hardware of the Quantum automation system with Unity Pro.

This documentation is valid for Unity Pro from version 5.0.

Validity Note

This documentation is valid from Unity Pro v5.0.

Product Related Information

⚠ WARNING

UNINTENDED EQUIPMENT OPERATION

The application of this product requires expertise in the design and programming of control systems. Only persons with such expertise should be allowed to program, install, alter, and apply this product.

Follow all local and national safety codes and standards.

Failure to follow these instructions can result in death, serious injury, or equipment damage.

User Comments

We welcome your comments about this document. You can reach us by e-mail at techcomm@schneider-electric.com.

Introduction

I

Introduction

The following part provides an overview of the Quantum Automation System

What's in this Part?

This part contains the following chapters:

Chapter	Chapter Name	Page
1	System	19
2	System Components	23
3	Network Support	35
4	Quantum Configurations	59
5	Module Configuration	73
6	Hardware Installation and Maintenance	77

System

1

Purpose

This chapter provides an overview on the Quantum system.

What's in this Chapter?

This chapter contains the following topics:

Topic	Page
System Overview	20
Typical Quantum System Configuration	21

System Overview

Overview

The Quantum system is a special-purpose computing system with digital processing capabilities. Quantum is designed for real time control in industrial and manufacturing applications in a modular, expandable architecture employing the following modules:

- Controller Modules (CPU)
- Power Supply Modules (CPS)
- I/O Modules (Dxx, Axx)
- Network Interface Modules (including Field Bus Modules)
- Intelligent / Special Purpose Modules
- Simulator (XSM) and Battery (XCP) Modules
- Racks (XBP) and Rack Expander (XBE)
- CableFast Cabling (CFx)

Expandable Architecture

Based on the local rack, the Quantum I/O system can be expanded by Network Interface modules with the following architecture:

Network	Network Interface Modules	Media
Remote I/O (RIO)	RIO Head, RIO Drop	RIO Coax cable
Distributed I/O (DIO)	NOM, DIO Drop	Twisted Pair

Field Bus

By the means of field bus modules the Quantum I/O system supports the following field buses:

- AS-i

Typical Quantum System Configuration

Typical System Block Diagram

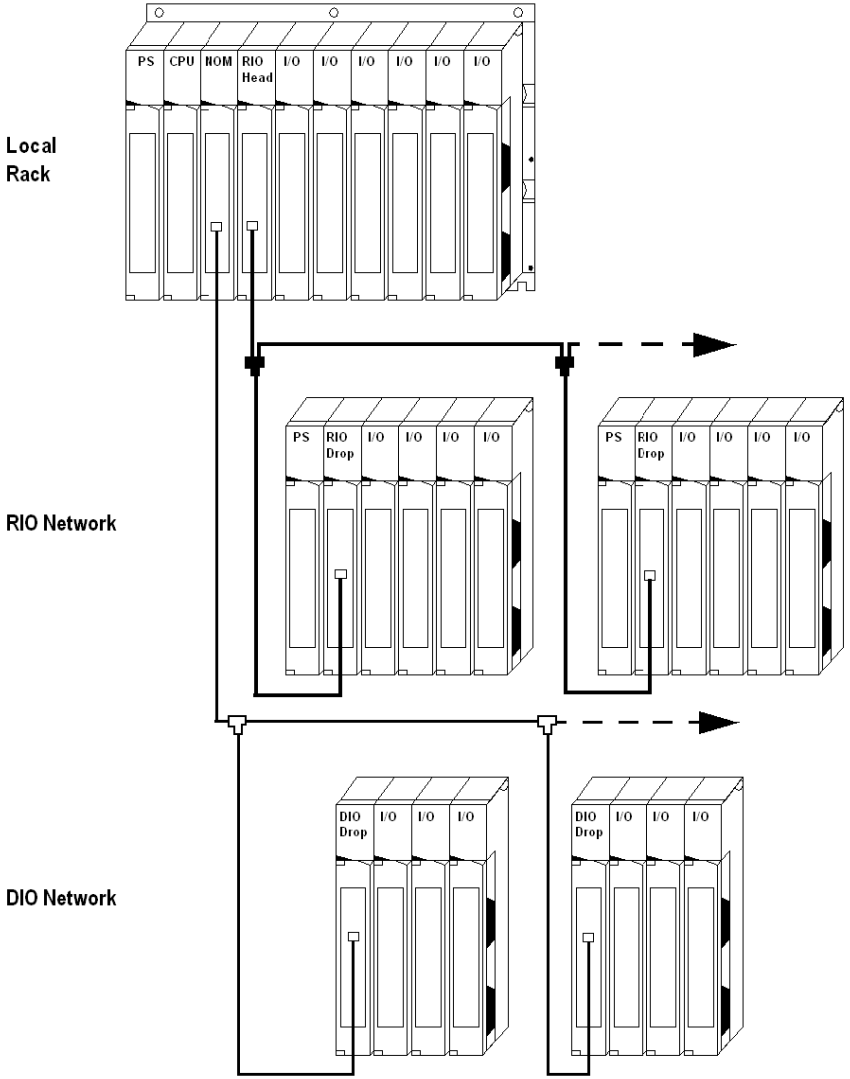

System Components

2

Purpose

This chapter provides an overview of the Quantum system components.

What's in this Chapter?

This chapter contains the following topics:

Topic	Page
Controller Modules (CPUs)	24
Power Supply Modules (CPS)	25
I/O Modules	26
Network Interface Modules	27
Intelligent/Special Purpose I/O Modules	29
Simulator (XSM) and Battery (XCP) Module	30
Racks (XBP) and Rack Expander (XBE)	31
CableFast Cabling (CFx) for I/O Modules	32
Hot Standby System	33

Controller Modules (CPUs)

Overview

The Quantum CPU serves as a bus master controlling the local, remote, and distributed I/O of the Quantum system.

The module is on the Quantum local I/O rack. It is a digitally operating electronic system, which uses a programmable memory for the internal storage of user instructions. These instructions are used to implement specific functions such as:

- Logic
- Process sequencing
- Timing
- Coupling
- Arithmetic

These instructions allow control through digital and analog outputs, for various types of machines and processes.

NOTE: For detailed Information see *Controller Modules (CPUs), page 91*

Power Supply Modules (CPS)

Overview

Quantum power supplies are used to supply system power to modules inserted into the rack, including:

- Quantum CPU modules
- Interface modules
- Quantum I/O modules

Depending upon the system configuration, the option exists of using the power supply in three different modes.

Power Supply Modes Table

The following table shows the power supply modes.

Power Supply Type	Usage
Standalone	For 3 A or 8 A configurations that do not require fault tolerant or redundant capabilities.
Standalone Summable	For configurations consuming more than the rated current of one supply, two summing power supplies can be installed in the same rack.
Standalone Redundant	For configurations requiring power for uninterrupted system operation. Two redundant power supplies are required for power redundancy.

⚠ WARNING

UNEXPECTED BEHAVIOR OF APPLICATION

Use identical power supplies with the exceptions noted in the Power Supplies chapter.

Failure to follow these instructions can result in death, serious injury, or equipment damage.

I/O Modules

Overview

Quantum I/O modules are electrical signal converters that convert signals to and from field devices to a signal level and format that can be processed by the CPU.

I/O modules are optically isolated to the bus. I/O modules are also software configurable.

Field Devices

Typical field devices include:

- limit switches
- proximity switches
- temperature sensors
- solenoids
- valve actuators

Further Information

NOTE: For detailed information see in the Quantum I/O Hardware Guide:

- Quantum I/O Analog IN Modules *(see Quantum with Unity Pro, Discrete and Analog I/O, Reference Manual)*
- Quantum I/O Analog OUT Modules *(see Quantum with Unity Pro, Discrete and Analog I/O, Reference Manual)*
- Quantum I/O Analog IN / OUT Modules *(see Quantum with Unity Pro, Discrete and Analog I/O, Reference Manual)*
- Quantum I/O Discrete IN Modules *(see Quantum with Unity Pro, Discrete and Analog I/O, Reference Manual)*
- Quantum I/O Discrete OUT Modules *(see Quantum with Unity Pro, Discrete and Analog I/O, Reference Manual)*
- Quantum I/O Discrete IN / OUT Modules *(see Quantum with Unity Pro, Discrete and Analog I/O, Reference Manual)*
- Quantum Intrinsically Safe Analog/Digital Modules *(see Quantum with Unity Pro, Discrete and Analog I/O, Reference Manual)*
- Quantum Safety I/O Modules *(see Quantum with Unity Pro, Discrete and Analog I/O, Reference Manual)*

Network Interface Modules

Overview

Different types of network interface modules are available and presented in the table below with their descriptions.

Network Interface Modules Table

The following table shows the network interface modules.

Type		Description
RIO Part *(see Quantum with Unity Pro, Experts and Communication, Reference Manual)*		Single and dual channel Remote I/O interface modules (RIO heads and drops) connected via a coaxial cable network.
DIO Part *(see Quantum with Unity Pro, Experts and Communication, Reference Manual)*		Single and dual channel Distributed I/O interface modules connected via a twisted pair Modbus Plus cable network.
Modbus Plus Part *(see Quantum with Unity Pro, Experts and Communication, Reference Manual)*		• Single and dual channel Network Option Modules (NOM) connected via a twisted pair Modbus Plus cable network. • Modbus Plus on fiber module connected via a fiber optic Modbus Plus cable network.

Type		Description
Ethernet Module *(see Quantum with Unity Pro, Experts and Communication, Reference Manual)*	TCP/IP	Single channel TCP/IP Ethernet interface module connected via a twisted pair or fiber optic cable network.
	SY/MAX	SY/MAX Ethernet module connected via a twisted pair or fiber optic cable network.
Field Bus Part *(see Quantum with Unity Pro, Experts and Communication, Reference Manual)*	Lonworks	Lonworks module connected via a twisted-pair network.
	Interbus	Interbus Interface module connected via a twisted pair network.
	Profibus	Profibus interface module connected via a Profibus port
	AS-i	The Quantum AS-i Master Module provides AS-i communications between the bus master module and the sensor/actuator slaves.
	Sercos	The SERCOS® Multi-Motion modules (MMS) are used to build a distributed automation solution, integrating motion applications with control applications

Intelligent/Special Purpose I/O Modules

Overview

Quantum Intelligent/Special Purpose I/O modules operate with minimum intervention from the Quantum controller after initial downloading of module parameters or programs. The Quantum intelligent/special purpose I/O modules include the following:

- High Speed Counter modules (EHC)
- ASCII Interface module (ESI)
- High Speed Interrupt module (HLI)
- Time Stamp modules (ERT)
- Clock module (DCF)

Simulator (XSM) and Battery (XCP) Module

Overview

There are two types of simulator modules, as described below.

Discrete and Analog Simulators Table

The following table shows discrete and analog simulators.

Simulator	Points / Channels	Type	Description
Discrete Simulator	16 Points IN	140 XSM 002 00	is used to generate up to 16 binary input signals to the 140 DAI 540 00 and the 140 DAI 740 00 AC input modules.
Analog Simulator	2 channels IN 1 channel OUT	140 XSM 010 00	is used for simulating 4 ... 20 mA field current loops used with current input Quantum modules.

Battery Module (XCP)

The Quantum battery module provides RAM backup power for Quantum expert modules.

Further Information

For detailed information see *Simulator (XSM) and Battery (XCP) Module, page 291*.

Racks (XBP) and Rack Expander (XBE)

Racks (XBP)

Quantum racks may be used in any locations of local, remote, or distributed I/O. There are six racks available in 2, 3, 4, 6, 10, and 16 slot versions.

Rack Expander (XBE)

The 140 XBE 100 00 Rack Expander provides the Modicon Quantum with the capacity to expand Local and Remote I/O drops to a second rack. For improved I/O capacity and efficiency, the rack expander will save money by minimizing the number of Remote I/O drops. The Rack Expander also improves the overall performance of Remote I/O based systems by reducing the number of Remote I/O drops the Quantum CPU has to service. The Rack Expander effectively doubles the maximum number of Discrete I/O that can be serviced by a Quantum Remote I/O system.

Further Information

NOTE: For detailed information see *Racks(XBP) and Rack Expander (XBE), page 273*

CableFast Cabling (CFx) for I/O Modules

Overview

The CableFast wiring system consists of pre-wired Quantum field wiring terminal strips for I/O modules.

Features

It is available in various cable lengths, that are terminated with D-type connectors. The D connectors plug into DIN rail-mounted terminal blocks offered in straight through or special application versions. Cables and terminal blocks are ordered separately and the terminal blocks may be used with any cable length. Pigtail cable versions are also available.

Quantum I/O Modules with CableFast Components

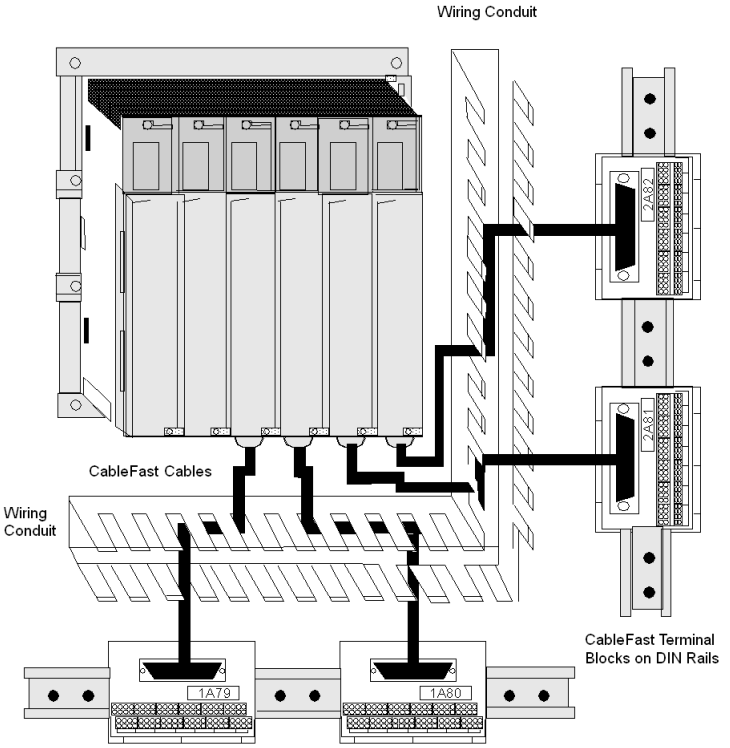

NOTE: For further details refer to *CableFast Cabling, page 393*.

Hot Standby System

Function

A Hot Standby (HSBY) system is based on two identically configured programmable logic controllers linked to each other and to the same remote I/O network. If one controller stops, the other assumes control of the I/O system.

Primary and Standby Controller

The Quantum Hot Standby system is designed for use where downtime cannot be tolerated. The system delivers high availability through redundancy. Two racks are configured with identical hardware and software. One of the PLCs acts as the primary controller. It runs the application by scanning user logic and operating remote I/O. The other PLC acts as the standby controller. The primary controller updates the standby controller after each scan. The standby is ready to assume control within one scan if the primary stops. Primary and standby states are switchable. Either controller can be put into the primary state, but to do this, the other must be in the standby state. The remote I/O network is operated by the primary controller.

NOTE: A Quantum Hot Standby system supports only remote I/O. It does not support local I/O or distributed I/O (DIO).

For a detailed description of the Hot Standby (HSBY) system refer to the HSBY User guide *, page*

Network Support

3

Purpose

This chapter provides an overview of the Quantum Network Support.

What's in this Chapter?

This chapter contains the following sections:

Section	Topic	Page
3.1	General Information	36
3.2	Remote I/O (RIO) and Distributed I/O (DIO)	41
3.3	Ethernet Networking Interfaces	46
3.4	Modbus/Modbus Plus Networking Interfaces	49
3.5	Fieldbus Networking Interfaces	53

3.1 General Information

Purpose

This section provides general information on the Quantum Network Support.

What's in this Section?

This section contains the following topics:

Topic	Page
Supported Networks Table	37
Quantum Network Interface Techniques	39

Supported Networks Table

Supported Networks Table

The following table shows the Quantum supported networks.

Service Description	Modbus	Modbus Plus	Remote I/O	Ethernet		AS-i	Profibus	INTERBUS	SERCOS
				TCP/IP	SY/ MAX				
Native to Quantum CPU	+	+	-	+(6)	-	-	-	-	-
Available on a Network Module	+	+	+	+	+	+	+	+	+
CPU Programming	+(1)	+	-	+	-	-	-	-	-
CPU Executive Firmware Loading Support	+(1)	+(1)	-	-	-	-	-	-	-
Module Firmware Loaded From CPU	+	+	+	+	+	-	+	-(5)	+
Report By Exception Communications	+(2)	+	-	+	+	-	-	-	-
Multi-node Broadcast Communications	-	+(1)	-	-	-	-	-	-	-
Synchronized I/O Scanning	-	-	+	-	-	-	-	-	+
NonSynchronized I/O Scanning	-	+(1)	-	-	-	-	-	+	-
Quantum I/O Drops	-	+(1)	+	-	-	-	-	-	-
Hot Standby Quantum I/O Drop Support	-	-	+	-	-	-	-	-	-
Hot Standby Data Communications Support	+	+	-	+	-	+	-	-	+(7)

Service Description	Modbus	Modbus Plus	Remote I/O	Ethernet		AS-i	Profibus	INTERBUS	SERCOS
				TCP/IP	SY/ MAX				
Optional Dual Cabling	-	+(1)	+	-	-	-	-	-	-
Optional Fiber Optics	+(3)	+(1)	+	+	+	-	-	+(3)	+(4)
Momentum I/O Drops	-	+(1)	-	+	-	-	+	+	-
Variable Speed Drives	+(3)	+(1)	-	-	-	-	-	+	-
Servo Motion Control	-	+(1)	-	-	-	-	-	+(3)	+
HMI: Displays & Panels	+	+(1)	+	-	-	-	-	+(3)	-
HMI: Work-stations	+	+(1)	-	+	+	-	-	-	-

(1) Refer to the Modbus Plus portion of the Quantum Specifier's guide section for details of available services on 140 NOM 2•• 00 Modbus Plus Network modules
(2) Service is only available on the native controller Modbus port when the XMIT block is used
(3) Available from third parties
(4) The SERCOS network standard is fiber optics.
(5) Module firmware loaded through serial port on module.
(6) Refers to HE-CPUs.

Quantum Network Interface Techniques

Overview

Quantum communication and networking modules use a variety of different techniques to interface to the Quantum controller over the local rack.

Direct CPU Driver

This technique allows the CPU to control high speed data transfers to and from the communication and networking modules, maximizing throughput and performance.

This technique is used extensively by the Remote I/O network and Hot Standby system to provide a highly deterministic synchronization of the CPU and I/O scans.

NOTE: Only one Remote I/O Head Interface is supported for each Quantum CPU.

Option Module Interface

This technique allows the communication and networking modules to control data transfers to and from the CPU, maximizing the flexibility of the communications interface.

This technique is used extensively by the Modbus Plus and Ethernet peer-to-peer network modules. The number of option module interfaces supported by each CPU model is described in the following table.

CPU Interface Support Table

The following table shows the summary of Quantum CPU option module interface support.

Quantum Controller Model Number	Available Option Module Interfaces Supported Per CPU
140 CPU 672 61	6
140 CPU 671 60S*	6
140 CPU 671 60	6
140 CPU 652 60	6
140 CPU 651 60S*	6
140 CPU 651 60	6
140 CPU 651 50	6
140 CPU 534 14A/B/U	6
140 CPU 434 12A/U	6
140 CPU 311 10	2

NOTE: Safety modules (140 CPU 651 60S and 140 CPU 671 60S) support only 140 NOE 771 11.

Communications and Networking Table

The following table shows the Quantum communications and networking modules.

Model Number	Description	Module Interface Technique	Rack Support			Bus Power mA
			Local	RIO	DIO	
140 CRP 931 00	Remote I/O Head Interface, single cable	Direct CPU Driver	Y	N	N	780
140 CRP 932 00	Remote I/O Head Interface, dual cable	Direct CPU Driver	Y	N	N	780
140 NOM 211 00	Modbus Plus Options, single cable	Option Module	Y	N	N	780
140 NOM 212 00	Modbus Plus Option, dual cable	Option Module	Y	N	N	780
140 NOM 252 00	Modbus Plus Option, single channel fiber	Option Module	Y	N	N	900
140 NOE 211 00	Ethernet TCP/IP Twisted Pair	Option Module	Y	N	N	1000
140 NOE 251 00	Ethernet TCP/IP Fiber Optic	Option Module	Y	N	N	1000
140 NOE 311 00	One 10BASE-T Ethernet/ SY/MAX (RJ45) port.	Option Module	Y	N	N	1000
140 NOE 351 00	Two 10BASE-T Ethernet/ SY/MAX (RJ45) port.	Option Module	Y	N	N	1000
140 NOE 771 ••	Ethernet TCP/IP Twisted Pair/Fiber Optic	Option Module	Y	N	N	750
140 EIA 921 00	AS-i Master	I/O Map (13/9)	Y	Y	Y	250
140 MMS 425 00	Multi-Axis Motion Controller w/SERCOS	Option Module	Y	N	N	2500
PTQ PDP MV1	Profibus Option Module	Option Module	Y	N	N	1200

3.2 Remote I/O (RIO) and Distributed I/O (DIO)

Purpose

This section provides information on the Quantum (RIO) and (DIO).

What's in this Section?

This section contains the following topics:

Topic	Page
Remote I/O (RIO)	42
Execution of Quantum Sections with Remote Inputs/Outputs	43
Distributed I/O (DIO)	45

Remote I/O (RIO)

Overview

There are the following types of Quantum RIO Modules:

- RIO Heads:
  - 140 CRP 931 00 *(see Quantum with Unity Pro, Experts and Communication, Reference Manual)*
  - 140 CRP 932 00 *(see Quantum with Unity Pro, Experts and Communication, Reference Manual)*
- RIO Drops:
  - 140 CRA 931 00 *(see Quantum with Unity Pro, Experts and Communication, Reference Manual)*
  - 140 CRA 932 00 *(see Quantum with Unity Pro, Experts and Communication, Reference Manual)*

They use an S908-based networking I/O configuration. Communication is done via single or dual coaxial cabling up to 15,000 feet away. This configuration supports a mix of the following product lines:

- SY/MAX
- 800 Series
- Quantum I/O

When Quantum RIO is required, the Quantum controller may support up to 31 RIO drops. In an RIO configuration, an RIO head module is connected with coaxial cable to RIO drop modules at each remote drop.

NOTE: In a single-cable configuration, it is recommended to connect the cable in channel A on both Local I/O (CRP) and Remote I/O (CRA).

NOTE: In a dual-cable configuration, it is mandatory to connect channel A from Local I/O (CRP) with channel A from Remote I/O (CRA) and channel B from Local I/O (CRP) with channel B from Remote I/O (CRA).

Execution of Quantum Sections with Remote Inputs/Outputs

General

Quantum PLCs have a specific section management system. It applies to stations with remote inputs/outputs.

These stations are used with following RIO modules:

- 140 CRA 931 00
- 140 CRA 932 00

This system allows remote inputs/outputs to be updated on sections with optimum response times (without waiting for the entire task cycle before updating the inputs/outputs).

Operation

The following diagram shows the IO phases when 5 drops are associated to client task sections.

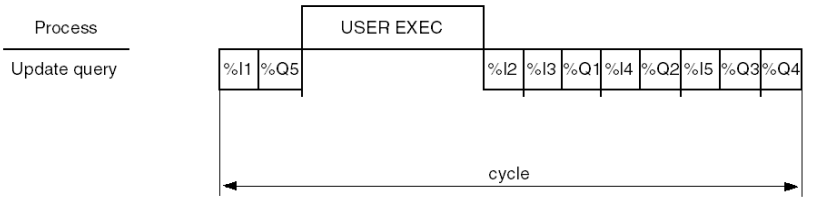

%Ii inputs of drop No. i
%Qi outputs of drop No. i
i drop number

Description

Phase	Description
1	Request to update: ● the inputs of the first drop (i=1) ● the outputs of the last drop (i=5)
2	Processing the program
3	● Updating the inputs of the first drop (i=1) ● Request to update the inputs of the second drop (i=2)
4	Request to update: ● the inputs of the third drop (i=3) ● the outputs of the first drop (i=1)
5	Request to update: ● the inputs of the fourth drop (i=4) ● the outputs of the second drop (i=2)
6	Request to update: ● the inputs of the last drop (i=5) ● the outputs of the third drop (i=3)
7	Request to update the outputs of the fourth drop (i=4)

Adjustment of the Drop Hold-Up Time Value

In order for the remote outputs to be correctly updated and avoid fallback values to be applied, the drop hold-up time must be set to at least twice the mast task cycle time. Therefore the default value, 300 ms, must be changed if the MAST period is set to the maximum value, 255 ms. The adjustment of the Drop Hold-Up time *(see Modicon Quantum, Hot Standby with Unity, User Manual)* must be done on all configured drops.

Distributed I/O (DIO)

Overview

Quantum DIO is implemented over a Modbus Plus network. The CPU or NOM modules may be the network head via their Modbus Plus ports.

Quantum DIO Modbus Plus drop adaptors are specifically designed to link Quantum I/O modules to the head via twisted pair shielded cable (Modbus Plus). The DIO drop modules also provide the I/O with power (maximum 3 A) from a 24 VDC or a 115/230 VAC source. Each DIO network supports up to 63 distributed drops using repeaters.

NOTE: For detailed information see Experts and Communication Reference Manual, Part Quantum Distributed I/O (DIO) Drop Modules *(see Quantum with Unity Pro, Experts and Communication, Reference Manual)*.

3.3 Ethernet Networking Interfaces

Purpose

This section provides information on the Quantum Ethernet Networking Interfaces.

NOTE: For details see Experts and Communication Reference Manual, Part Quantum Ethernet Modules *(see Quantum with Unity Pro, Experts and Communication, Reference Manual)*.

What's in this Section?

This section contains the following topics:

Topic	Page
TCP/IP Ethernet	47
SY/MAX Ethernet	48

TCP/IP Ethernet

Overview

Quantum TCP/IP Ethernet modules make it possible for a Quantum controller to communicate with devices on an Ethernet network using TCP/IP – the de facto standard protocol. An Ethernet module may be inserted into an existing Quantum system and connected to existing Ethernet networks via fiber optic or twisted pair cabling.

SY/MAX Ethernet

Overview

Quantum-SY/MAX Ethernet modules are Quantum modules that can be placed in a Quantum rack, to connect Quantum controllers to SY/MAX devices and applications.

3.4 Modbus/Modbus Plus Networking Interfaces

Purpose

This section provides information on the Quantum Modbus/Modbus Plus Networking Interfaces.

NOTE: For detailed information see Experts and Communication Reference Manual, Part Modbus Plus Network Option Modules (NOM) *(see Quantum with Unity Pro, Experts and Communication, Reference Manual)*.

What's in this Section?

This section contains the following topics:

Topic	Page
General Information	50
Features	51
Modbus and Modbus Plus Services	52

General Information

Overview

Quantum NOM modules provide extended communication capabilities for the Quantum system within a Modbus and a Modbus Plus configuration.

Modbus

Modbus, a master/slave protocol, is a de facto industry standard with support from over 500 industrial suppliers.

On-line programming or data acquisition applications are easily supported directly from the serial port of any computer.

Modbus can be used in either a simple point-to-point manner with a pair of devices, or in a network architecture with up to 247 slave devices.

Modbus Plus

Modbus Plus combines high speed, peer-to-peer communication and easy installation to simplify applications and reduce installation costs.

It allows host computers, controllers and other data sources to communicate as peers throughout the network via low-cost twisted pair cable or optional fiber optic cable.

As a deterministic token-passing network, Modbus Plus communicates at one megabaud for fast access to process data. It’s strength is its ability to control real-time control devices like I/O and drives, without degraded performance due to loading or traffic.

Bridging between Modbus and Modbus Plus is done automatically on CPUs and Modbus Plus network modules.

The bridge mode redirects Modbus messages onto the Modbus Plus network for easy connectivity between Modbus and Modbus Plus devices.

A summary of the available services on Quantum Modbus and Modbus Plus ports is given in the following table.

Modbus Plus on Fiber Module

Quantum Modbus Plus on Fiber modules provides connectivity to Modbus Plus nodes by fiber cable without fiber optic repeaters.

The use of a 490 NRP 254 Fiber Optic Repeater allows the creation of a pure fiber optic network or a mixed fiber optic/twisted-pair network.

Features

Overview

Each Quantum CPU includes both a Modbus and Modbus Plus communications port. The features offered by both these communication protocols are listed in the following table.

Modbus and Modbus Plus Features Table

The following table shows the Modbus and Modbus Plus features.

Features	Modbus	Modbus Plus
Technique	Slaves polled by a master	Peer-to-peer, token rotation
Speed	19.2 kbaud typical	1 Mbaud
Electrical	RS-232, various others	RS-485
Distance without repeater	RS-232, 50 ft. (15 m)	1,500 ft. (457 m)
Media	Various	Twisted pair, Fiber optics
Max nodes per network	247	64
Max network traffic	300 registers/sec @ 9.6 kbaud	20,000 registers/sec
Programming	Yes	Yes
Read/Write data	Yes	Yes
Global data	No	Yes
Peer Cop	No	Yes

Modbus and Modbus Plus Services

Modbus and Modbus Plus Services Table

The following table shows the Quantum Modbus and Modbus Plus services.

Type	Service Description	Native CPU Ports		NOM 1-2 Ports		NOM 3-6 Ports1	
		Modbus	**Modbus Plus**	**Modbus**	**Modbus Plus**	**Modbus**	**Modbus Plus**
Modbus Services	Default Modbus Port Parameters	Yes	-	Yes	-	Yes	-
	Configurable Modbus Port Parameters	Yes	-	Yes	-	Yes(5)	-
	Modbus to Modbus Plus Bridging	Yes(1)	-	Yes(2)	-	Yes(2)	-
	Local CPU Programming	Yes(3)	-	Yes(3)	-	No	-
	Remote CPU Programming over Modbus Plus	Yes(3)	-	Yes(3)	-	Yes(1)	-
	Modbus access to local CPU	Yes	-	Yes	-	No	-
	Modbus access to remote CPU over Modbus Plus	Yes	-	Yes	-	Yes	-
	Modbus Network Slave Support	Yes	-	No	-	No	-
	Modbus Master support with XMIT block	Yes	-	No	-	No	-
	Executive Firmware Loading Support	Yes	-	No	-	No	-
Modbus Plus services	MSTR read/write register messaging(4)	-	Yes	-	Yes	-	Yes
	MSTR read/write Global Data messaging	-	Yes	-	Yes	-	Yes
	MSTR get/clear local/remote statistics	-	Yes	-	Yes	-	Yes
	Config Extension Global Data Support	-	Yes	-	Yes	-	No
	Config Extension Peer Cop Support	-	Yes	-	Yes	-	No
	Distributed I/O Support	-	Yes	-	Yes	-	No
	CPU Programming	-	Yes(3)	-	Yes(3)	-	Yes(3)
	Executive Firmware Loading Support	-	Yes	-	No	-	No

(1) The native CPU Modbus port can be disabled from bridge mode operation with the native Modbus Plus Port.
(2) Modbus ports on NOMs are in bridge mode with their associated Modbus Plus port.
(3) Only one programmer connection can be logged in at a time to any CPU, and only one program monitor can be attached at a time to any CPU.
(4) Up to 4 MSTR read/write register instructions can be serviced per CPU scan per Modbus Plus port.
(5) Modbus port parameters on NOMs 3-6 are defined by Modbus Port 3 when the comm parameter selector switch is in mem.

3.5 Fieldbus Networking Interfaces

Purpose

This section provides information on Quantum Fieldbus Networking Interfaces.

NOTE: For detailed information see Experts and Communication Reference Manual, Part Quantum Field Bus Modules *(see Quantum with Unity Pro, Experts and Communication, Reference Manual)*.

What's in this Section?

This section contains the following topics:

Topic	Page
INTERBUS (NOA)	54
Profibus (CRP)	55
AS-i (EIA)	56
Sercos (MMS)	57

INTERBUS (NOA)

Overview

Quantum INTERBUS (NOA) modules provide connectivity between a Quantum controller and the INTERBUS network.

The INTERBUS is a fieldbus network designed for I/O blocks and intelligent devices used in manufacturing. It offers a master/slave topology which permits deterministic I/O servicing over its network which can be up to 12.8 km (8 miles) in length..

Profibus (CRP)

Overview

The PTQ PDP MV1 Profibus DP Communication Module provides connectivity to the Profibus.

Profibus DP is a fieldbus designed for I/O communication used in manufacturing. It supports baudrates up to 12 MBaud.

AS-i (EIA)

Overview

The Quantum AS-i Master Module provides AS-i communications between the bus master module and the sensor/actuator slaves. One master module can control 31 slaves. Multiple master modules can be used in a single control system. These sensor/actuators can be in the local CPU, an RIO, or a DIO drop adapter.

Sercos (MMS)

Overview

The SERCOS® MMS motion modules are used to build a distributed automation solution, integrating motion applications with control applications, based on Quantum PLCs. The axis modules and Quantum CPUs communicate either through the Quantum rack or by using the Modbus Plus network. The data transfer is transparent, and does not need any additional application program.

Fiber optic interface

The physical interface between the SERCOS module and the servo drive is done by the SERCOS network, using fiber optic cable. This optic link is entirely digital, and provides communication parameters for the tuning, diagnostics, and operation of both motion control modules and servo drives.

Quantum Configurations

4

Purpose

This chapter provides information on the Quantum Configurations.

What's in this Chapter?

This chapter contains the following sections:

Section	Topic	Page
4.1	Quantum Local I/O, Remote I/O and Distributed I/O	60
4.2	Quantum Local I/O	63
4.3	Quantum Remote I/O (RIO)	66
4.4	Quantum Distributed I/O (DIO)	69

4.1 Quantum Local I/O, Remote I/O and Distributed I/O

Purpose

This section provides information on the features and configuration of Quantum Local I/O, Remote I/O and Distributed I/O.

What's in this Section?

This section contains the following topics:

Topic	Page
Features	61
Local, RIO and DIO Configuration	62

Features

Local, Remote and Distributed I/O Features

The following table shows features of the Local, Remote and Distributed I/O configurations.

Feature	Configuration		
	Local I/O	**Remote I/O**	**Distributed I/O**
Maximum I/O Words			
Per drop	unlimited I/O	64 IN / 64 OUT	30 IN / 32 OUT
Per network		1,984 IN / 1,984 OUT	500 IN / 500 OUT
Maximum drops per network		31	63 (with repeater)
Media		Coax	Twisted Pair
Speed		1.5 MHz	1 MHz
Maximum distance without repeaters		15,000 ft. (4,573 m)	1,500 ft. (457 m)
Scan synched I/O servicing		Yes	No
Momentum I/O support		No	Yes
Hot Standby support		Yes	No
Modbus Plus compatible		No	Yes

Local, RIO and DIO Configuration

Overview

Valid Quantum configurations can be equipped with a combination of:

- Quantum CPUs
- Power supplies
- I/O interfaces
- Expert modules
- I/O modules

Local, RIO, and DIO Configuration Table

The following table provides valid Quantum configurations, including racks and modules.

If Configuration Type Is	Rack Types (Typical) Are	Required Modules Are	Optional Modules Are	Modules Not Permitted Are
Local	6, 10, 16 slots	Power Supply CPU	RIO Head, I/O, NO•*	RIO Drop, DIO Drop
RIO**	6, 10, 16 slots	Power Supply RIO Drop	I/O	CPU, RIO Head, DIO Drop NO•*
DIO	2, 3, 4, 6 slots	DIO Drop	Power Supply, I/O	CPU, RIO Head, NO•*

* NOM, NOA, and NOE

** Remote I/O is typically used for large (number of modules) drops 6, 10, or 16 slot racks. Distributed I/O is typically used for small drops using 2, 3, 4, or 6 slot racks.

NOTE: Every Quantum module requires power from the rack (except power supply and DIO modules). For a valid configuration, add up the required rack current (in mA) for every module, and verify that this number is less than the available power in the selected power supply.

4.2 Quantum Local I/O

Purpose

This chapter provides an Overview on the Quantum Local I/O.

What's in this Section?

This section contains the following topics:

Topic	Page
Configuration	64
Example	65

Configuration

Overview

A local I/O configuration is contained in one to two racks and includes Quantum modules mounted in a standard Quantum rack. Quantum Local I/O can be as few as one I/O module (in a three slot rack).

Or a maximum of 27 I/Os totalized as follows:

- 13 in the first rack along with CPU, power supply and expansion module (XBE)
- 14 in the expansion rack along with power supply and expansion module (XBE)

Example

I/O Configuration Figure

The following figure is an example of a typical local I/O configuration.

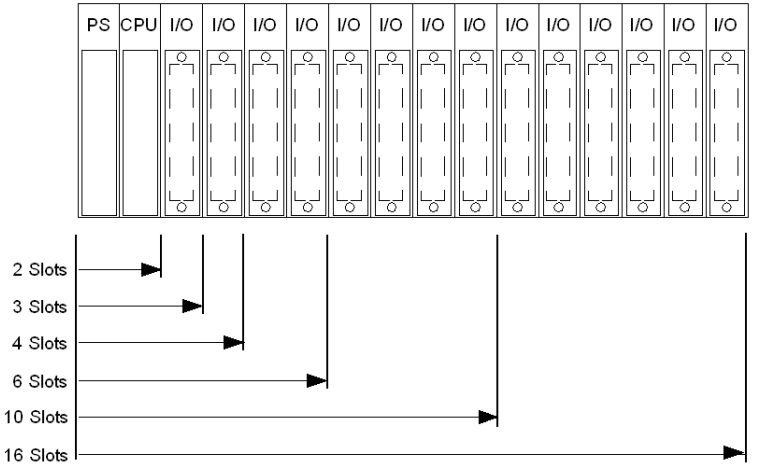

4.3 Quantum Remote I/O (RIO)

Purpose

This section provides an overview on the configuration of the Quantum Remote I/O (RIO).

NOTE: For detailed information see Experts and Communication Reference Manual, Part Quantum Remote I/O (RIO) Modules *(see Quantum with Unity Pro, Experts and Communication, Reference Manual)*.

What's in this Section?

This section contains the following topics:

Topic	Page
Single-cable Configuration	67
Dual-cable Configuration	68

Single-cable Configuration

Single-cable RIO Configuration Figure

The following figure is an example of a single-cable Quantum RIO configuration.

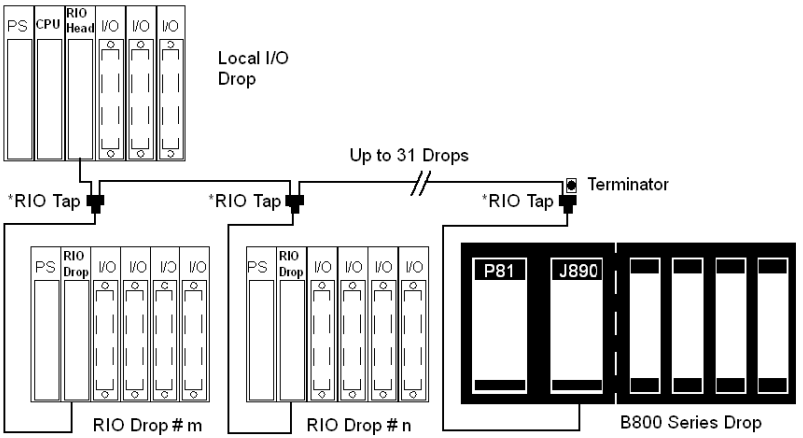

NOTE: In a single-cable configuration, it is recommended to connect the cable in channel A on both Local I/O (CRP) and Remote I/O (CRA).

Dual-cable Configuration

Dual-cable RIO Configuration Figure

The following figure is an example of a dual-cable Quantum RIO configuration.

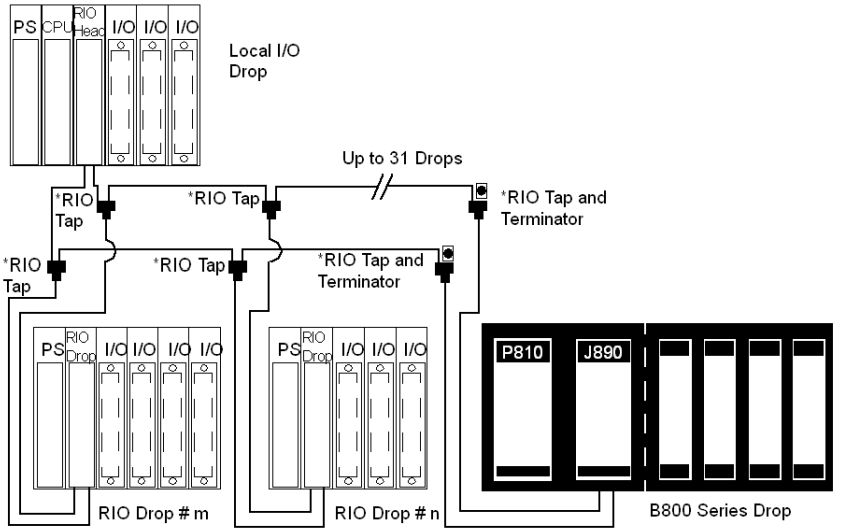

NOTE: Dual cables provide systems with added protection against cable breaks or damaged connectors. With two cables connected between the host and each node, no single cable break will disrupt communications.

NOTE: In a dual-cable configuration, it is mandatory to connect channel A from Local I/O (CRP) with channel A from Remote I/O (CRA) and channel B from Local I/O (CRP) with channel B from Remote I/O (CRA).

4.4 Quantum Distributed I/O (DIO)

Purpose

This section provides an overview on the configuration of Quantum Distributed I/O (DIO).

NOTE: For detailed information see Experts and Communication Reference Manual, Part III Quantum Distributed I/O (DIO) Drop Modules *(see Quantum with Unity Pro, Experts and Communication, Reference Manual)*.

What's in this Section?

This section contains the following topics:

Topic	Page
Single-cable Configuration	70
Dual-cable Configuration	71

Single-cable Configuration

Single-cable DIO Configuration Figure

The following figure is an example of a single-cable Quantum DIO configuration.

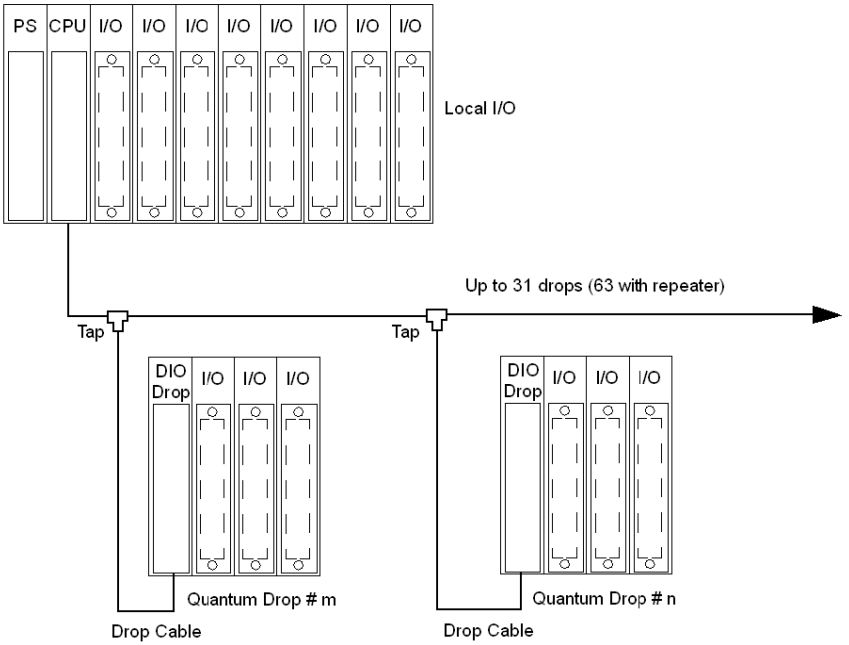

Dual-cable Configuration

Dual-cable DIO Configuration Figure

The following figure is an example of a dual-cable Quantum DIO configuration.

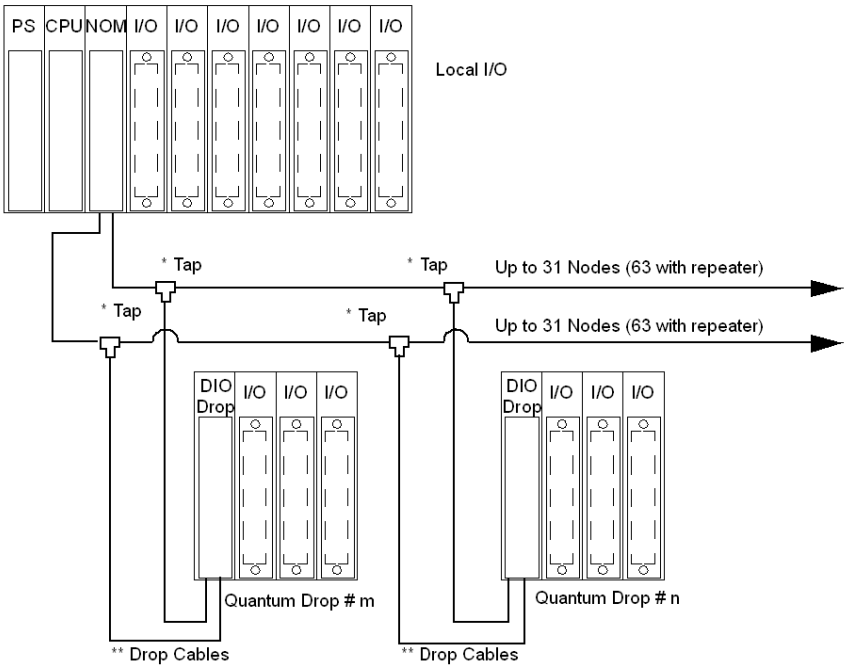

NOTE: Dual cables provide systems with added protection against cable breaks or damaged connectors. With two cables connected between the host and each node, no single cable break will disrupt communications.

Module Configuration

5

Purpose

This chapter provides information on software configuration of the module.

What's in this Chapter?

This chapter contains the following topics:

Topic	Page
Mapping a Local Quantum I/O Station	74
Open the Parameter Configuration	75

Mapping a Local Quantum I/O Station

Overview

Use the following dialog to map an existing local Quantum I/O station with a new module.

Inserting a module (local)

This table shows the steps required for inserting a module in a local station.

Step	Action
1	Call the Bus Editor
2	Mark a free slot in the local station (left mouse button)
3	Move the mouse pointer over the marked slot
4	Click on the right mouse button **Result:** A shortcut menu is opened 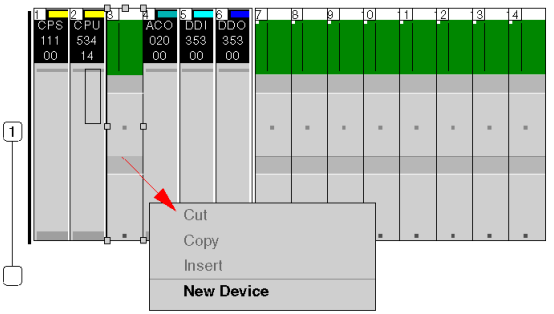
5	Select **New Device** **Result:** A dialog window opens that displays available modules
6	Select the desired module from the respective category in the Hardware catalog. **Result:** The new module is inserted in the empty slot on the local station. 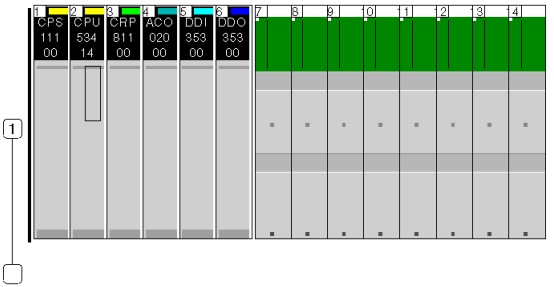

Open the Parameter Configuration

Overview

The following dialog box enables you to call the parameter configuration for a module.

An explanation of the individual parameters can be found in the respective module chapters.

Open the Parameter Configuration

This table shows the steps required to open the parameter configuration.

Step	Action
1	Call the Bus Editor
2	Select the module
3	Click on the right mouse button **Result:** A shortcut menu is opened 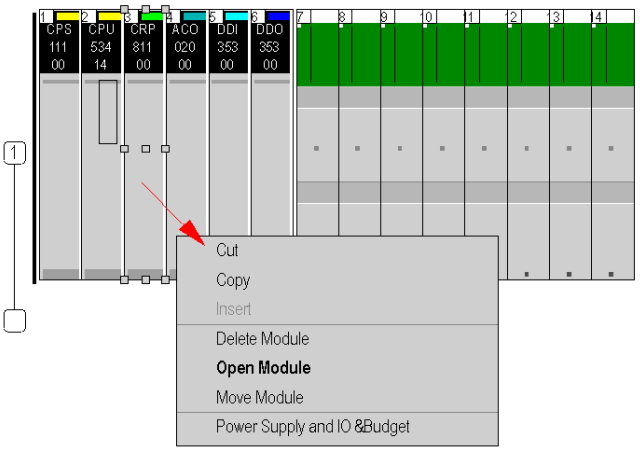
4	Select **Open Module** **Result:** The module opens with the parameter configuration window

Hardware Installation and Maintenance

6

Purpose

This chapter provides information on the Quantum hardware installation and maintenance.

What's in this Chapter?

This chapter contains the following topics:

Topic	Page
Space Requirements	78
Mounting Brackets	80
Mounting Quantum Modules	82
Mounting and Removing a Terminal Strip	86
Mounting Jumper Clips	88
Removing a Module Door	89

Space Requirements

Spacing Requirements Figure

The following figure shows the Quantum system spacing requirements.

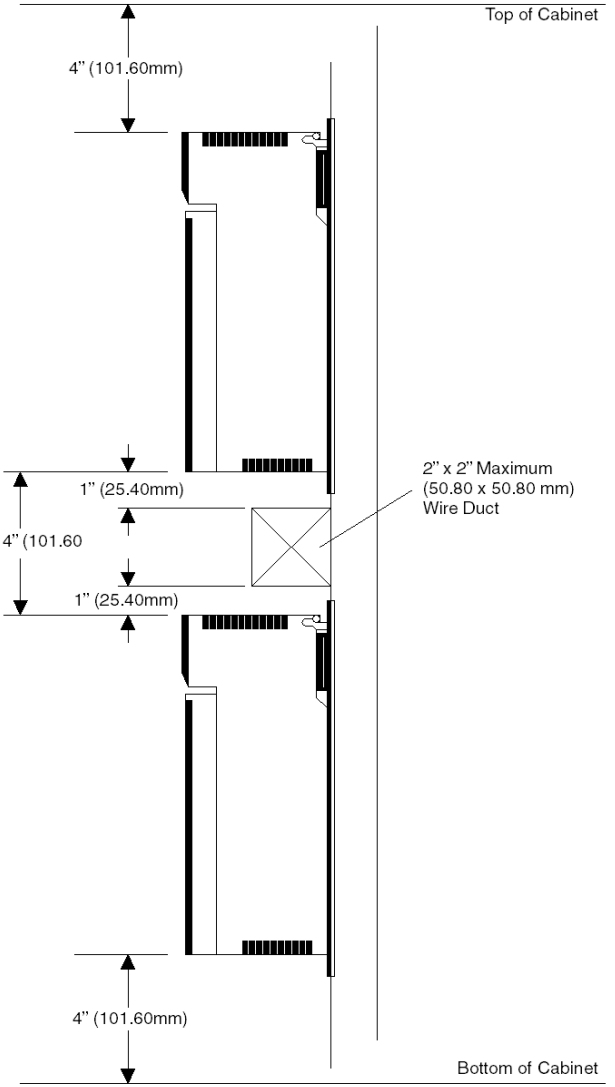

Spacing Requirements Table

The following table gives a summary of the spacing requirements for a Quantum system.

Minimum Spacing	Location
4 in. (101.60 mm)	Between the top of the cabinet and the top of the modules in the upper rack.
4 in. (101.60 mm)	Between the bottom of the cabinet and the bottom of the lower modules in the lower rack.
4 in. (101.60 mm)	Between the upper and lower modules when the racks are mounted one above the other.
1 in. (25.40 mm)	On either side between the cabinet walls and end modules.
Note: Wiring ducts up to 2 in. x 2 in. (50.80 mm x 50.80 mm) may be centered between back planes. If the duct extends further than 2 in. (50.80 mm) out from the mounting panel, there must be a 4 in. (101.60 mm) space between the modules and duct on the top and bottom.	

⚠ WARNING

UNEXPECTED EQUIPMENT OPERATION

Install the racks lengthways and horizontally to facilitate ventilation and take the spacing requirements table into account.

Failure to follow these instructions can result in death, serious injury, or equipment damage.

Mounting Brackets

Overview

Mounting brackets are required when mounting racks in 19 inch NEMA cabinets. The mounting bracket supports the 2- through 10-position racks. The bracket mounts to rails using standard NEMA hardware.

Mounting brackets are offered in two sizes:

- 20 mm (0.79in) for back rail mounting
- 125 mm (4.92in) for front rail mounting

125 mm Mounting Bracket Figures

NOTE: Before installing a Quantum rack to a mounting bracket, ensure that the mounting holes of the bracket and rack are properly aligned.

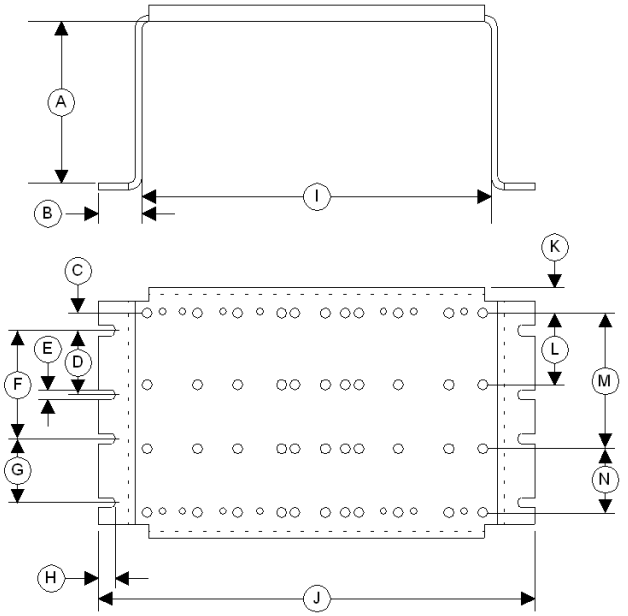

Diameter of the mounting holes: 6.6 mm / 0.26 inches

A 125 mm (4.92 in)
B 22.83 mm (0.90 in)
C 17.5 mm (0.69 in)
D 88.9 mm (3.50 in)
E 7.1 mm (0.28 in)
F 146.1 mm (5.75 in)
G 88.9 mm (3.50 in)

H 14.7 mm (0.58 in)
I 436.6 mm (17.19 in)
J 482.25 mm (18.99 in)
K 20.2 mm (0.79 in)
L 94.5 mm (3.72 in)
M 175.5 mm (6.91 in)
N 94.5 mm (3.72 in)

20 mm Mounting Bracket Figure

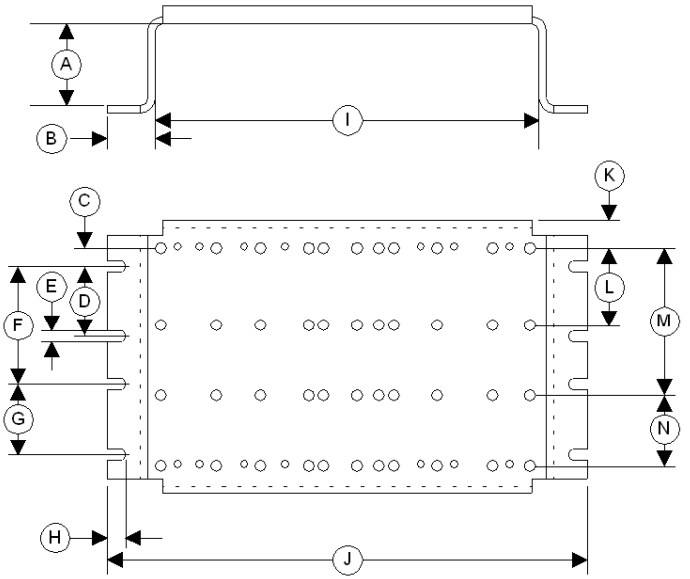

Diameter of the mounting holes: 6.6 mm / 0.26 inches

A 20 mm (0.79 in)
B 22.83 mm (0.90 in)
C 17.5 mm (0.69 in)
D 88.9 mm (3.50 in)
E 7.1 mm (0.28 in)
F 146.1 mm (5.75 in)
G 88.9 mm (3.50 in)
H 14.7 mm (0.58 in)
I 436.6 mm (17.19 in)
J 482.25 mm (18.99 in)
K 20.2 mm (0.79 in)
L 94.5 mm (3.72 in)
M 175.5 mm (6.91 in)
N 94.5 mm (3.72 in)

Mounting Quantum Modules

Overview

Quantum modules can be inserted into any slot of any rack. Although Power supply modules should be installed in the first or last slots, to have a cooling effect. The modules can be removed under power (hot swapped) without damaging modules or the rack.

Refer to the following figures and procedure when mounting modules.

NOTE: To provide EMC level, the mounting area of the CPU has to provide metallic contact. Therefore remove any labels in the affected area and clean the surface using solvent. The Quantum PLC enclosures and terminal strips are made of polycarbonates. This material can be damaged by strong alkalis and various hydrocarbons, esters, halogens and ketones in combination with heat. Common products containing these include detergents, PVC products, petroleum products, pesticides, disinfectants, paint removers, and spray paints. Use care in selecting and using cleaning solvents..

⚠ CAUTION

POSSIBILITY OF MODULE DAMAGE

The inappropriate use of solvents, cutting oils, bug sprays and similar chemicals may cause the breakdown of module cases or terminal blocks.

Failure to follow these instructions can result in injury or equipment damage.

Hot Swap Precautions

⚠ WARNING

UNEXPECTED SYSTEM BEHAVIOR - CPU HOT SWAP CONSEQUENCES

Do not Hot Swap Quantum CPU.

Failure to follow these instructions can result in death, serious injury, or equipment damage.

Unplugging and re-plugging the Quantum CPU when the rack is under power is not recommended. You are strongly advised to shut the power down before attempting to remove the CPU for any reason.

⚠ CAUTION

UNINTENDED EQUIPMENT OPERATION

Hot swapping an I/O module can generate an error code causing the module to stop functioning.

Failure to follow these instructions can result in injury or equipment damage.

Mounting Bracket and Rack

The following steps describe the mounting of bracket and rack

Step	Action
1	If required for the application, select and install a 20 mm or 125 mm mounting bracket to the rack using standard hardware. Front view: 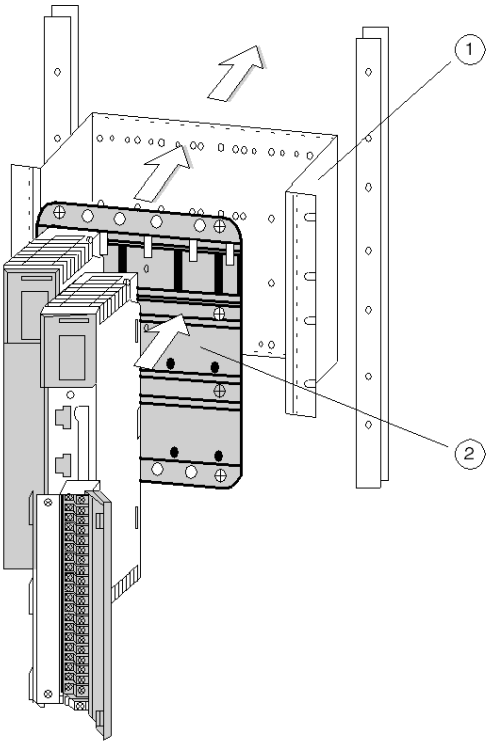 **1** Mounting bracket **2** Rack
2	Select and install the appropriate rack to the mounting bracket using standard hardware and remove the plastic rack connector dust covers.

Mounting a Module

The following steps describe the mounting of a module

Step	Illustration	Action
1	Side view: 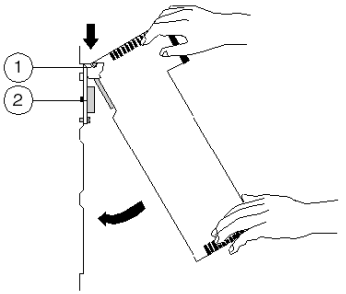 **1** Module Hooks **2** I/O Bus Connector	Mount the module at an angle on to the two hooks located near the top of the rack.
2		Swing the module down to make an electrical connection with the rack I/O bus connector.
3	Side view: 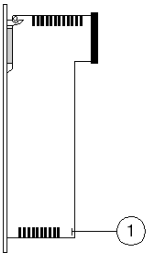 **1** Mounting screw	Tighten the screw at the bottom of the module to fasten it to the rack. **Note:** The maximum tightening torque for this screw is 2-4 in-lbs (0.23 - 0.45 Nm).

Mounting and Removing a Terminal Strip

Mounting a Terminal Strip

The following steps describe the mounting of a Terminal Strip

Step	Action
1	Install the appropriate Terminal Strip on the module. Side view: 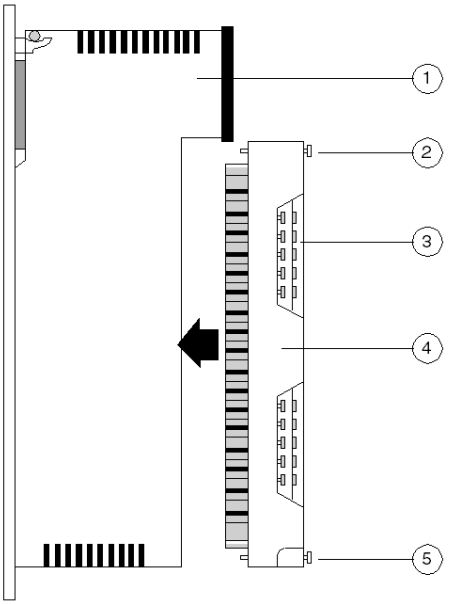 **1** Module **2** Mounting screw (top) **3** Terminal Strip I/O screws **4** Terminal Strip **5** Mounting screw (bottom)
2	Tighten with the mounting screws at the top and bottom of the terminal with a philips screwdriver. **Note:** The maximum tightening torque for the mounting screws is 10 in-lbs (1.13 Nm).
3	Make I/O connections with a philips screwdriver as shown in the individual Quantum module wiring diagrams. **Note:** The maximum tightening torque for the terminal strip field wiring screws is 10 in-lbs (1.13 Nm).

Removing a Terminal Strip

The Quantum I/O terminal strips have been designed with a pry slot to assist in their removal. Follow the procedure below to remove the terminal strip.

Step	Action
1	Loosen the Terminal Strip mounting screws located at the top and bottom of the Terminal Strip.
2	Locate the pry slot at the top of the Terminal Strip near the top mounting screw. 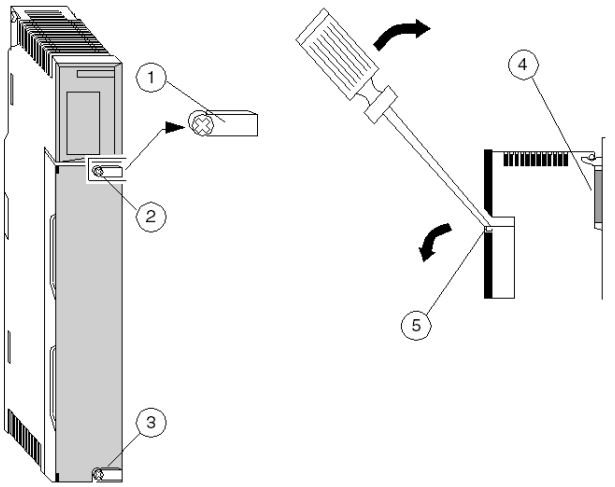 **1** Pry Slot (exploded view) **2** Mounting screw (top) **3** Mounting screw (bottom) **4** Rack **5** Pry Slot (side view)
3	Insert a flat edge screwdriver into the pry slot and lever the top of the Terminal Strip away from the module.
4	Once the top of the Terminal Strip has been loosened, the terminal strip may be removed by continuous outward pressure with the screwdriver.

Mounting Jumper Clips

Overview

Terminal strip jumper clips are installed when contiguous I/O points need to be jumpered (for example, on the 140 AVO 020 00 analog out put module).

Mounting Jumper Clips

The following steps describe the mounting of jumper clips.

Step	Action
1	Remove the power.
2	Remove the Terminal Strip from the module. Front view: 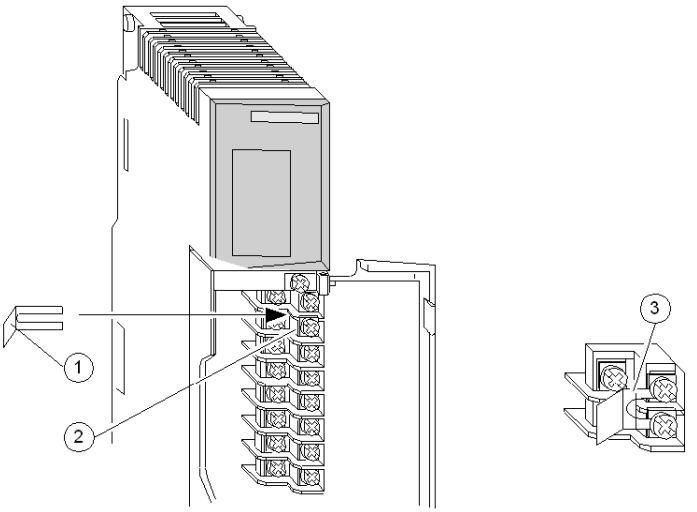 **1** Jumper clip **2** Terminal Strip I/O screw **3** Inserted jumper clip (exploded view)
3	Loosen the terminal strip I/O screws of the points that you want jumpered.
4	Insert the jumper clip under the loosened screws (see exploded view).
5	Tighten the screws and reinstall the module.

Removing a Module Door

Overview

The terminal strips have a removable door to facilitate access to the terminal strip. Remove the door before wiring a module.

Removing a Module Door

Step	Action
1	Open the module door.
2	Place your thumb near the middle of the door. Front view: 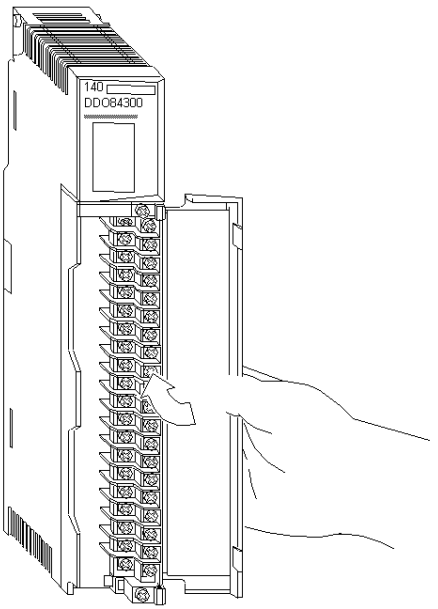
3	With your thumb, apply pressure until the door bends and the door hinge pins pop out of the retaining holes at the top and bottom of the terminal strip.
4	After wiring the module, reinstall the door using the reverse of the above.

Controller Modules (CPUs)

II

Introduction

This part provides information on Quantum Controller Modules (CPU).

What's in this Part?

This part contains the following chapters:

Chapter	Chapter Name	Page
7	General Information	93
8	Low End CPU	97
9	High End CPU	133
10	Memory Cards for High End CPU	181

General Information

7

Purpose

This chapter provides general information on Quantum Controller (CPU) modules.

What's in this Chapter?

This chapter contains the following topics:

Topic	Page
CPU Overview	94
Machine Stop Codes	95

CPU Overview

Characteristics

	CPU	SRAM (bytes)	Max IEC Program	Max IEC Program (with PCMCIA)	Key Switch
Low End	140 CPU 311 10	2 MBytes	400 kBytes	NA	No
	140 CPU 434 12•	2 MBytes	800 kBytes	NA	Yes
	140 CPU 534 14•	4 MBytes	2.7 MBytes	NA	Yes
High End	140 CPU 651 50	2 MBytes	512 kBytes	7168 kBytes	Yes
	140 CPU 651 60	2 MBytes	1024 kBytes	7168 kBytes	Yes
	140 CPU 651 60S(Safety)	2 MBytes	1024 kBytes	7168 kBytes	Yes
	140 CPU 652 60	4 MBytes	3072 kBytes	7168 kBytes	Yes
	140 CPU 671 60	2 MBytes	1024 kBytes	7168 kBytes	Yes
	140 CPU 671 60S(Safety)	2 MBytes	1024 kBytes	7168 kBytes	Yes
	140 CPU 672 61	4 MBytes	3172 kBytes	8 MBytes	Yes

Machine Stop Codes

Machine Stop Code Descriptions

Stop Bit Code (hex)	Description
0x7FFF	PLC unhealthy
0x8000	PLC stopped
0x8400	CPU has stopped because the firmware of the CRP module is not compatible with the application program in which the "Online Modification in RUN" check box has been selected
0x4000	Bad I/O traffic cop
0x2000	PLC in Dim awareness
0x1000	Bad port intervention
0x0100	Software error, controller in halt
0x0400	CRP firmware not compatible with CCOTF function
0x0080	Watchdog timer has expired
0x0010	RIO option error
0x0001	Bad configuration

Error Stopped Codes

- **PLC unhealthy:** This condition indicates that the CPU has not successfully completed one or more of its health diagnostics. Usually this means that the CPU needs to be replaced.
- **PLC stopped:** By itself, an 8000 hex is not an error but a CPU state. If, for example, a user issues a CPU stop command, the status register indicates 8000 hex. An error condition exists when 8000 is added with one or more of the previously defined errors (bits 0-14).
  Example:
  - 2 stop codes are added,
    the 8100 stop code suggests that a PLC has stopped because of a software error detection. The controller is in halt and the application is stopped.
  - 3 stop codes are added,
    the 8180 stop code suggests that a PLC has stopped because of a software error detection and that the watchdog timer has expired.
- **Bad I/O map:** This error occurs if the user declares more than one I/O drop in his configuration but does not have an RIO Head installed. This error may also occur if a drop configuration exceeds the maximum number of inputs/outputs allowable per drop.

- **PLC unconfigured:** Expect this condition if you are trying to log into the CPU for the first time. This error indicates that the CPU has not been configured. Write a configuration offline and transfer it to the CPU prior to logging into the CPU. If this error appears while you are seeking to communicate with a previously running CPU, this could indicate corrupted state memory in the CPU. You need to clear memory and attempt to reload the user logic program.
- **Bad modbus port intervention:** This error sometimes appears in conjunction with another error. The CPU is usually stopped when this error occurs. The error may also appear if you attempt to clear the system stop state. Try to clear user logic and reload.
- **Software error, controller in halt:** This error is usually caused by an incomplete or unsuccessful program load. Try to reload.
- **Watchdog timer has expired:** The error indicates that the CPU has taken too much time to complete its current scan. You may increase the Watchdog timer value. This error may indicate that the CPU is inoperable..
- **RIO option has failed:** The RIO option board (140 CRP 93• 00) is unhealthy. Replace the board. An error 8010 means that the CPU has stopped because RIO option board has to be replaced (unhealthy).
- **Bad configuration:** The most probable cause is that the memory has been modified through the MODBUS/MODBUS PLUS ports. If this error occurs during a program download, check your configuration data for values greater than the CPU's specified addressable range. This error can also appear if the CPU's memory is corrupt.

NOTE: The user can access the Stop codes and the sub Stop codes with the LCD keypad, available only with High-End processors, by selecting **System info** -> **Stop codes**.

If the sub Stop code is included between:
- 50 and 98, the machine stopped because of a Traffic Cop error..
- 101 and 137, the machine stopped because of an error of Peer cop.

You can see, in the words %SW124 and %SW125, information if it is a system error and the last default detected.

HALT state causes

The causes of the HALT state are saved in the system words: %SW125, %SW126 and %SW127. When the PLC is in HALT mode, the application is no longer executed, the IO are no longer applied.

To quit the HALT state, the user must either initialize or reload the application into the PLC.

Low End CPU

8

Purpose

This chapter provides information on the Low End Controller modules.

What's in this Chapter?

This chapter contains the following topics:

Topic	Page
Presentation	98
Front Panel Switches	99
Rear Panel Switches	102
Key Switches	103
Modbus Connectors	106
Indicators	108
Processor Configuration Screen	111
140 CPU 311 10 Specifications	122
140 CPU 434 12A Specifications	124
140 CPU 534 14A/U Specifications	127
140 CPU 534 14B/U Specifications	130

Presentation

Illustration

The following figure shows the Low End CPU module and its components.

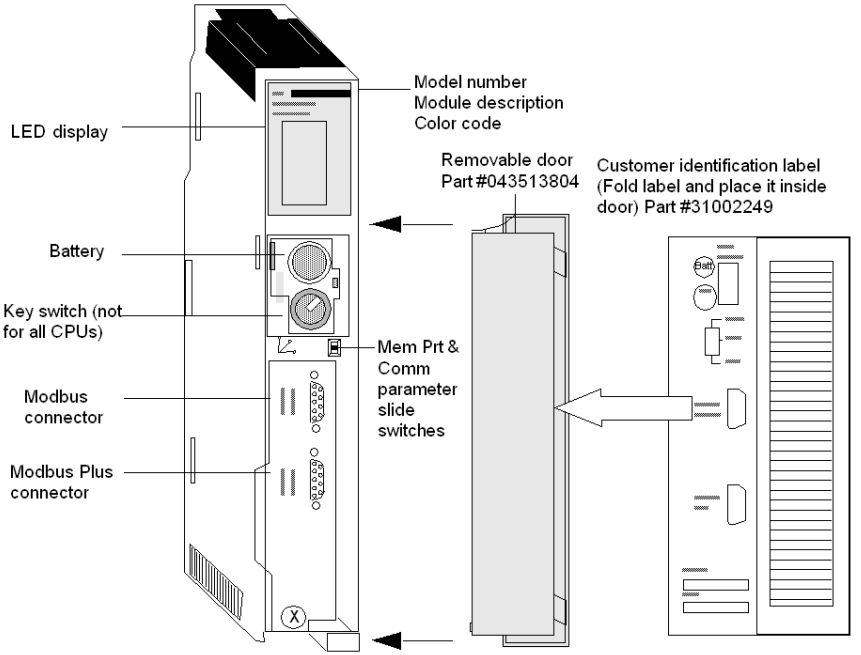

Front Panel Switches

Front Panel Switches

Two three-position slide switches are located on the front of the CPU. The left switch is used for memory protection when in the top position and no memory protection in the middle and bottom positions. The switch on the right is used to select the Comm parameter settings for the Modbus (RS-232) ports.

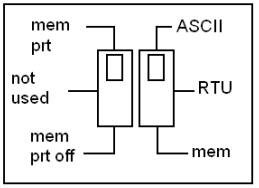

NOTE: The memory switch selection is taken into account immediately.

NOTE: The modbus switch selection is taken into account after a Power off/on of the Quantum PLC

⚠ WARNING

UNINTENDED EQUIPMENT OPERATION

Do not allow an automatic backup restore upon cycling power to the PLC. The backup restore function reloads in the PLC memory the version saved on the memory card, that can be different than the one that was running before the power off.

Failure to follow these instructions can result in death, serious injury, or equipment damage.

ASCII Comm Port Parameters Table

Setting the right slide switch to the top position assigns ASCII functionality to the port. The following ASCII Comm parameters are preset and cannot be changed:

ASCII Comm Port Parameters	
Transmission Speed (Baud)	2,400
Parity	Even
Data Bits	7
Stop Bits	1
Device Address	Rear panel rotary switch setting

NOTE: The CPU hardware defaults to bridge mode when the right slide switch is set to RTU mode. When networking controllers, a panel device connected to the CPU Modbus port can communicate with the controller to which it is connected, as well as log into any nodes on the Modbus Plus network.

RTU Comm Port Parameters

Setting the right slide switch to the middle position assigns remote terminal unit (RTU) functionality to the port; the following comm parameters are set and cannot be changed.

RTU Comm Port Parameters	
Transmission Speed (Baud)	9,600
Parity	Even
Data Bits	8
Stop Bits	1
Device Address	Rear panel rotary switch setting

Valid Comm Port Parameters Table

Setting the right slide switch to the bottom position gives you the ability to assign comm parameters to the port in software. The following parameters are valid.

Item	Valid Comm Port Parameters
Mode	ASCII or RTU
Transmission Speed (Baud)	19,200
	9,600
	7,200
	4,800
	3,600
	2,400
	2,000
	1,800
	1,200
	600
	300
	150
	134.5
	110
	75
	50
Data Bits	ASCII: 7 Bit
	RTU: 8 Bit
Stop Bits	1 / 2
Parity	Enable/Disable Odd/Even
Device Address	1 ... 247

Rear Panel Switches

Rear Panel Switches

Two rotary switches (refer to the illustration and table below) are located on the rear panel of the CPU. They are used for setting the Modbus Plus node and Modbus port addresses.

NOTE: The highest address that may be set with these switches is 64.

SW1 (the top switch) sets the upper digit (tens) of the address; SW2 (the bottom switch) sets the lower digit (ones) of the address. The illustration below shows the correct setting for an example address of 13.

SW1 and SW2 Switches Figure

The following figure shows the SW1 and SW2 settings.

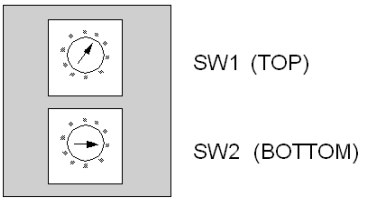

SW1 and SW2 Address Settings Table

The following table shows the SW1 and SW2 address settings.

Node Address	SW1	SW2
1 ... 9	0	1 ... 9
10 ... 19	1	0 ... 9
20 ... 29	2	0 ... 9
30 ... 39	3	0 ... 9
40 ... 49	4	0 ... 9
50 ... 59	5	0 ... 9
60 ... 64	6	0 ... 4

NOTE: If "0" or an address greater than 64 is selected, the Modbus + LED will be "on" steady, to indicate the selection of an invalid address.

Key Switches

Overview

The low end CPUs have 1,435 kb of Flash EPROM memory, which can be used to save the program and the variables' initial values. On power-up, if there is a program in Flash memory, you can choose one of three operating modes, using the PLC MEM switch on the CPU's front panel. The 140 CPU 434 12A and 140 CPU 534 12A are equiped with a key switch with the Start, Mem Prt, and Stop positions. The 140 CPU 311 10 features a slide switch with the Mem Prt On, Not Used, and Mem Prt Off options.

Behavior on Power Up

The CPU's behavior on power up is determined by the key switch position. The behavior could be:

- Cold Restart
- Warm Restart

⚠ WARNING

UNEXPECTED EQUIPMENT OPERATION

Always perform a **Back Up Clear** after an OS upgrade of the Quantum (140 CPU 534 •, 140 CPU 434 14A, 140 CPU 311 10) CPUs.

Failure to follow these instructions can result in death, serious injury, or equipment damage.

NOTE: To ensure a warm restart of an application following an OS upgrade on Quatum CPUs, click **PLC** →**Project Backup...** →**Backup Clear**.

This section describes the three positions of the rotary key switch, and their respective meanings.

Key Switch Figure

The key switch isolates memory from programming changes while the controller is in operation. The following figure shows the key switch.

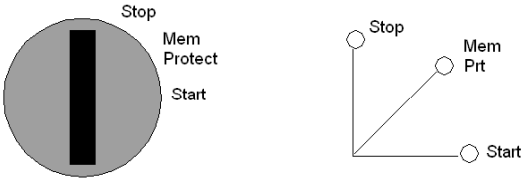

NOTE: The key switch positions shown next to the left switch (above) are provided for reference only, and are marked on the module as indicated on the right.

NOTE: The 140 CPU 434 12A and 140 CPU 534 12A processors feature the key switch illustrated above, while the 140 CPU 311 10 has a slide switch.

Key Switch Description Table

The following table provides key/slider switch information for these three low end CPUs.

CPU Type	Switch Position	Behaviour	Protected?	Accepts Stop or Start?	Key Switch Transition
Quantum 140 CPU 311 10	Mem Prt On	The application in Flash memory is not transferred to internal RAM; a warm restart of the application is triggered.	Y	N	From Mem Prt Off: does not modify last controller state and rejects programmer changes.
	Not used	Do not use this position, because it may lead to undefined operation	Y	N	n/a
	Mem Prt Off	The application in Flash memory is automatically transferred to internal RAM when the PLC is powered up. A cold restart of the application is triggered.	N	Y	From Mem Prt On : enables programmer changes and starts controller if stopped.
Quantum 140 CPU 434 12A 140 CPU 534 14A	Stop	The application in Flash memory is not transferred to internal RAM; a warm restart of the application is triggered.	Y	N	From Start or Mem Prt: stops controller, if running, and voids programmer changes.
	Mem Prt	The application in Flash memory is not transferred to internal RAM. A warm restart of the application is triggered.	Y	N	From Stop or Start: inhibits program changes, controller run status is unchanged.
	Start	The application in Flash memory is automatically transferred to internal RAM when the PLC is powered up. A cold restart of the application is triggered.	N	Y	From Stop: enables programmer changes, starts controller. From Mem Prt: accepts programmer changes, starts controller if stopped.

Modbus Connectors

Modbus Connector Pinouts

Quantum CPUs are equipped with a nine-pin RS-232C connector that supports Schneider Electric's proprietary Modbus communication protocol. The following is the Modbus port pinout connections for nine-pin and 25-pin connections.

Modbus Port 1 has full modem interfacing capabilities Modbus Port 2 RTS/CTS connections function properly for normal non-modem communications but do not support modems.

NOTE: Although the Modbus ports electrically support existing Modbus cables, it is recommended that a Modbus programming cable (Part # 990 NAA 263 20 or 990 NAA 263 50) be used. This cable has been designed to fit under the door of a Quantum CPU or NOM module.

Modbus Ports Pinout Connections Figure

The following figure shows the Modbus port pinout connections for nine-pin and 25-pin connections.

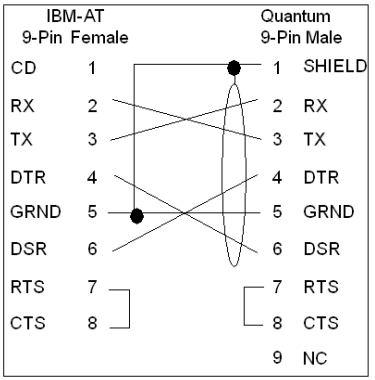

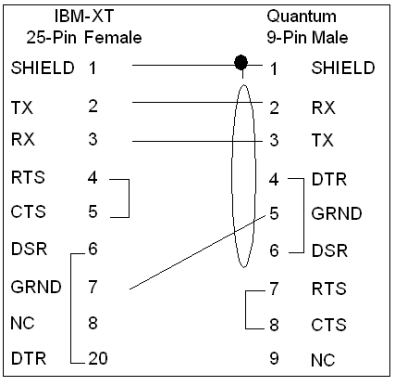

The following is the abbreviation key for the above figure.

TX: Transmitted Data	DTR: Data Terminal Ready
RX: Received Data	CTS: Clear to Send
RTS: Request to Send	NC: No Connection
DSR: Data Set Ready	CD: Carrier Detect

Modbus Ports Pinout Connections for Portable Computers

The following figure shows the Modbus port pinout connections for 9-pin portable computers.

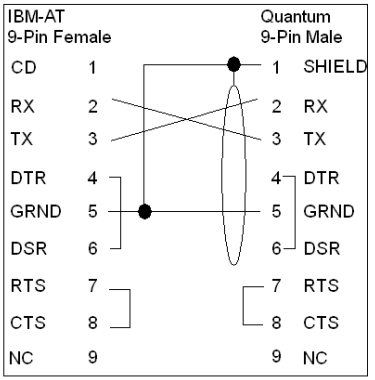

Indicators

Illustration

The following figure shows the LED indicators.

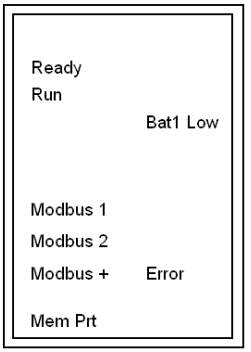

Description

The following table shows the LED description for the LE-CPU modules.

LEDs	Color	Indication when On
Ready	Green	The CPU has passed powerup diagnostics.
Run	Green	The CPU has been started and is solving logic. (See the following table for *Run LED Error Codes, page 108*).
Modbus 1	Green	Communications are active on the Modbus port 1.
Modbus 2	Green	Communications are active on the Modbus port 2.
Modbus +	Green	Communications are active on the Modbus Plus port.
Mem Prt	Amber	Memory is write protected (the memory protect switch is on).
Bat 1 Low	Red	The battery needs replacing.
Error	Red	Indicates an communications error on the Modbus Plus port.

Run LED Error Codes

The following table shows the Run LED error codes for the LE-CPU modules.

Number of Blinks	Code	Error
Continuous	0000	requested kernel mode
2	80B	ram error during sizing
	80C	run output active error
	82E	MB command handler stack error

Number of Blinks	Code	Error
3	769	bus grant received
	72A	not master asic on cpu
	72B	master config write bad
	72C	quantum bus DPM write error
	72F	plc asic loopback test
	730	plc asic BAD_DATA
4	604	UPI timeout error
	605	bad UPI response opcode
	606	UPI bus diagnostic error
	607	modbus cmd-buffer overflow
	608	modbus cmd-length is zero
	609	modbus abort command error
	614	mbp bus interface error
	615	bad mbp response opcode
	616	timeout waiting for mbp
	617	mbp out of synchronization
	618	mbp invalid path
	619	page 0 not paragraph aligned
	61E	bad external uart hardware
	61F	bad external uart interrupt
	620	bad receive comm state
	621	bad transmit comm state
	622	bad comm state trn_asc
	623	bad comm state trn_rtu
	624	bad comm state rcv_rtu
	625	bad comm state rcv_asc
	626	bad modbus state tmr0_evt
	627	bad modbus state trn-int
	628	bad modbus state rcv-int
	631	bad interrupt

Number of Blinks	Code	Error
5	503	ram address test error
	52D	P.O.S.T BAD MPU ERROR
6	402	ram data test error
7	300	EXEC not loaded
	301	EXEC Checksum
8	8001	Kernal prom checksum error
	8002	flash prog / erase error
	8003	unexpected executive return

NOTE: Information in the Code column is visible only with the Flash download utility.

Processor Configuration Screen

Overview

There are the following possibilities to configure the Quantum LE-CPUs:

- *Base configuration, page 111*, including Modbus Ports
- *Configuration of the communication type, page 121*

Base configuration

Steps to base configuration, including Modbus Ports

Step	Action
1	Open the Bus Editor of Unity Pro
2	Select the CPU module
3	Click on the right mouse button **Result:** The context menu appears 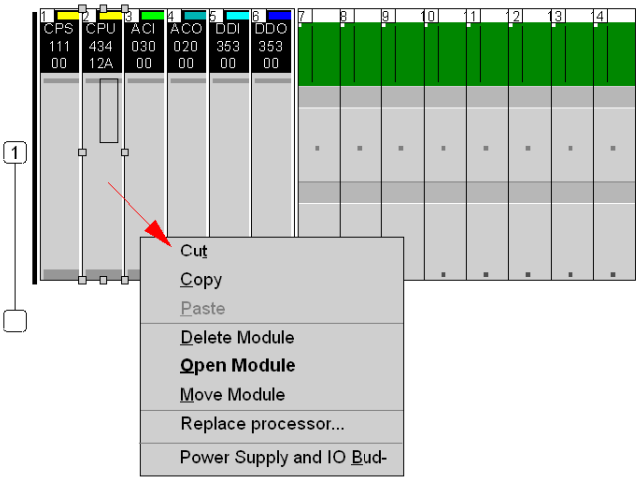
4	Choose **Open Module** **Result:** The modul opens with the **Summary** tab
5	Choose one of the tabs: ● Overview, *(see page 112)* ● Summary, *(see page 112)* ● **Configuration,** ● **Modbus Port,** ● Animation, *(see page 118)* ● I/O object, *(see page 118)* The tabs with configuration features are in bold type

Overview

This screen contains the specification of the module, extracted from the Quantum Hardware Reference Guide.

Summary

Summary Screen:

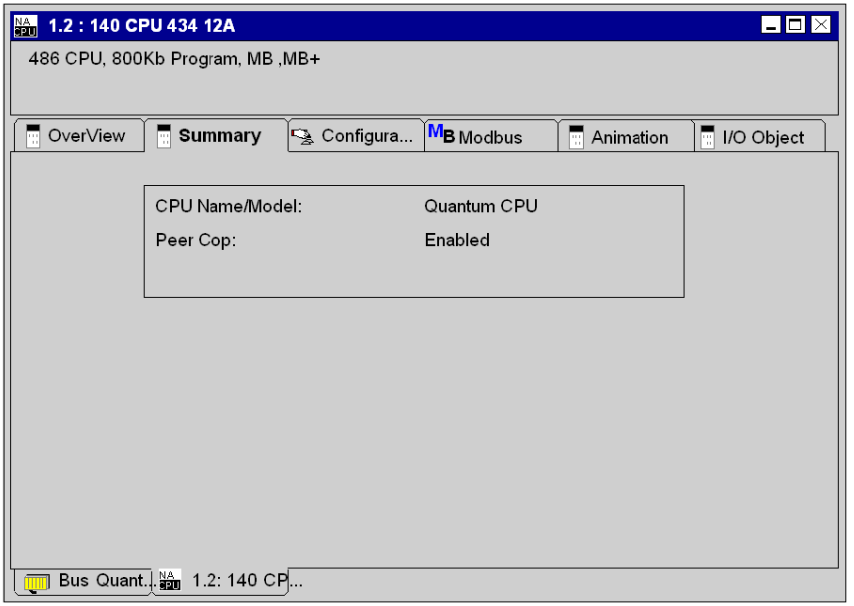

Description of the Summary Screen:

Item	Detail	Option/Value	Description
CPU Name/Model:	Quantum CPU		
Peer Cop:	Disabled	Enabled	Peer Cop=Enabled only possible in combination with NOM
	Time:	.....	

Configuration

Configuration Screen:

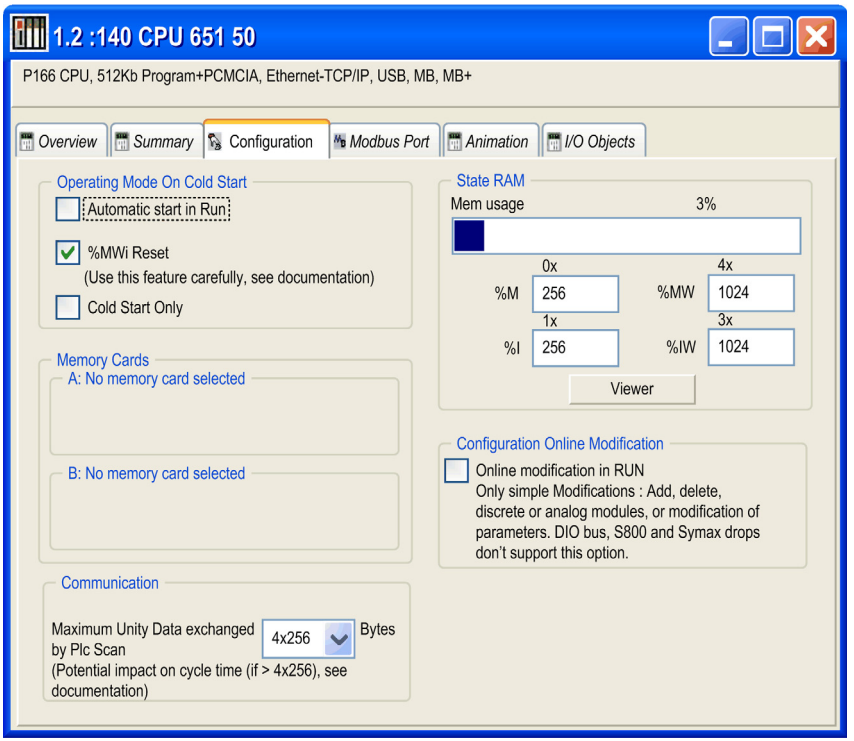

Description of the Configuration Screen:

Item	Option	Value	Description
Operating Mode On Cold Start	Automatic start in Run	x	Determines the operating condition during Cold Start
	%MWi Reset on cold start	x	
	Cold Start Only	x	If you wish, enable the Cold Start Only *(see Modicon Quantum, Hot Standby with Unity, User Manual)* feature.
Memory Cards	A:	N/A	Displays the configuration in the PCMCIA Slots
	B:	N/A	
Communication	By default, the bandwidth is 4x256 bytes, supported by the OS versions prior to V2.80 for the CPU and V4.60 for the NOE.		The maximum data volume exchanged each cycle between the NOE and CPU modules.
	For Quantum processors: ● 140 CPU 311 10 ● 140 CPU 534 14 ● 140 CPU 434 12	4x256 4x1024	
	For Quantum processors: ● 140 CPU 651 50 ● 140 CPU 651 60 ● 140 CPU 652 60 ● 140 CPU 671 60 ● 140 CPU 672 61	4x256 4x1024 8x1024 12x1024	
State RAM	Mem usage	1.	A bar displays percent of memory used.
	%M-0x	2.	Size of the different memory areas **Note:** The values for %IW and %MW have to be divisible by 8.
	%MW-4x	2.	
	%I-1x	2.	
	%IW-3x	2.	
	Viewer	N/A	Opens the State RAM Viewer tab, which displays the allocation of used memory. (See the illustration following.)

Item	Option	Value	Description
Configuration Online Modification	Online modif in RUN	x	This check box allows to: ● Add or delete discrete or analog modules, ● Modify Parameters **NOTE:** These modifications can be done in RUN.
1. The value (expressed as a percentage and displayed on the scale) depends on the memory usage of the Hot Standby configuration. 2. Enter the appropriate values. All values depend on Hot Standby configuration.			

Per Quantum 140 CPU 3••, 140 CPU 4•• and 140 CPU 5•• the %MWi value is as follows:

		Power ON: without cold start	**Power ON: with cold start**
%MWi reset box	Unchecked	%MWi keeps their value	%MWi = 0
	Checked		Initial value of %MWi

NOTE: %MWi will reset with the cold start %S0 or a loading program. Cold start is typically after a program load, %S0 can be set with the user program to initiate a cold start.

Button to show the allocation of the used memory

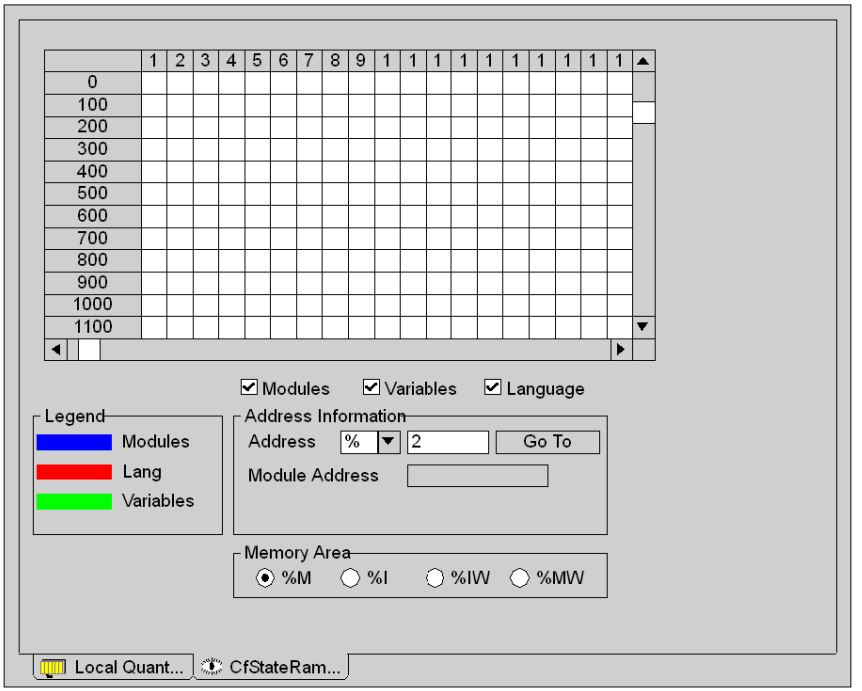

NOTE: The state ram viewer can be directly accessible via the menu:

- **PLC →State Ram Viewer**

The content of the grid may be changed by setting the following two filters:

1. Memory user
   - Modules
   - Language
   - Variables
2. Memory area
   - %M
   - %I
   - %IW
   - %MW

Modbus Port

Modbus Port Screen:

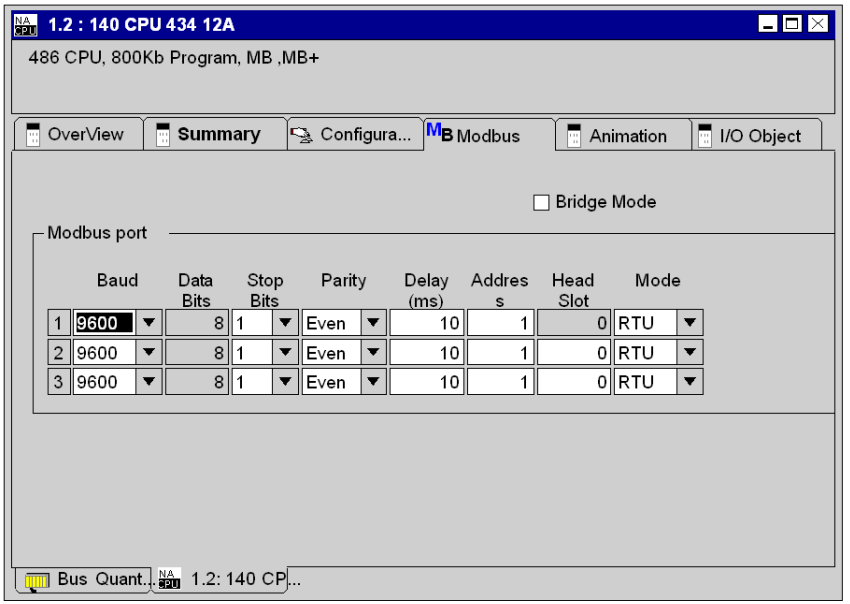

Description of the Modbus Port Screen:

Item	Detail	Option/Value	Description
Modbus port			
Baud	9600	50-19200 kBit/s	These data must be specified for every Link separately
Data Bits	8	7 when ASCII mode is selected	
Stop Bits	1	2	
Parity	EVEN	ODD, NONE	
Delay (ms)	10 ms	10..1000 in 10 ms increments	
Address	1	1..247	
Head Slot	0	1..16	
Mode	RTU	ASCII	

Bridge Mode must be checked if you are making a network link between Modbus and Modbus Plus.

Animation

Based on the animation window, there are the following windows, accessible by tabs:

- Task
- Realtime clock
- Information

NOTE: The windows are depicted in offline mode. Connected with a PLC their appearances will change.

Animation Screen (Task):

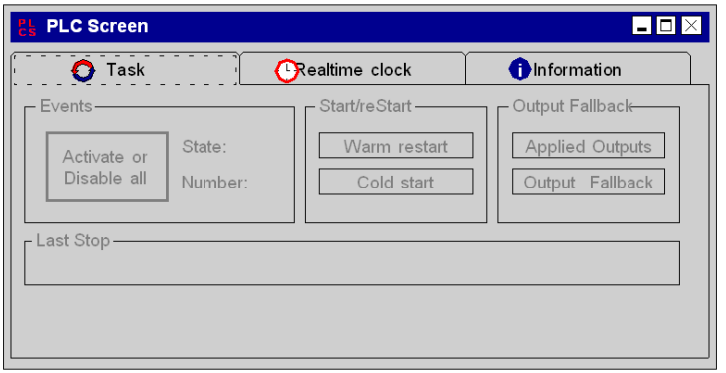

Description of the Animation Screen (Task):

Item	Detail	Option/Value	Description
Events	State: Number:	... ...	Online available Status information of events
	Activate or Disable all		Button to control the events
Start/reStart	Warm Start		
	Cold Start		
Output fallback	Applied Outputs		Specifies the output behavior
	Output Fallback		
Last Stop		.../.../...	

Animation Screen (Realtime clock):

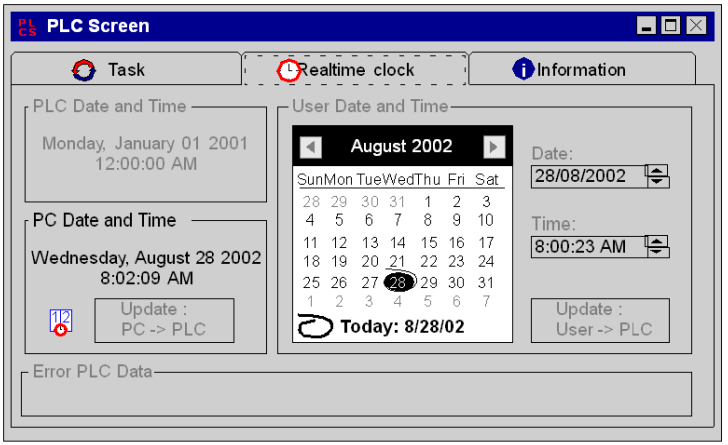

Description of the Animation Screen (Realtime clock):

Item	Detail	Description
PLC Date and Time		Indication of the current PLC date and time
PC Date and Time	Update PC->PLC	To update the PLC with the PC system time
User Date and Time	Update User->PLC	To update the PLC with the time set by the user

Animation Screen (Information):

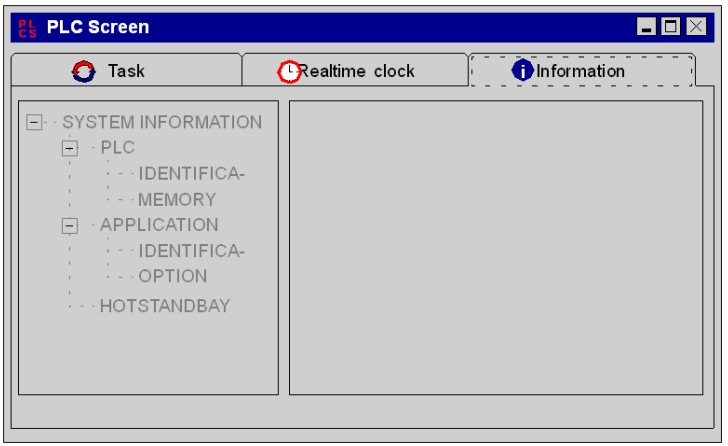

Description of the Animation Screen (Information):

Item	Detail	Option/Value	Description
System Information	PLC / Identification	PLC Range Processor Name Processor Version Hardware ID Network address	Only Online available
	PLC / Memory	RAM CPU	
	Application / Identification	Name Creation Product Date Modification Product Date Version Signature	
	Application / Option	Empty Terminal Support Upload Information Comments Animation Table Global Protection Section Protection Application Diagnostic Forced Bits	
	Hotstandby	Bit Number Status Register PLC Mode Other PLC Mode PLCs matching Logic PLC switch Coprocessor Health Hot Standby Capability	

I/O Object

The I/O objects tab is used to associate variables with the module I/Os and to manage these different variables. This tab is describe in chapter I/O Management *(see Unity Pro, Operating Modes,)*.

Configuration of the communication type

Steps to configuration of the communication type

Step	Action
1	Open the Bus Editor of Unity Pro
2	Move the mouse over the rectangle of the CPU module **Result:** The mouse pointer changes to a hand 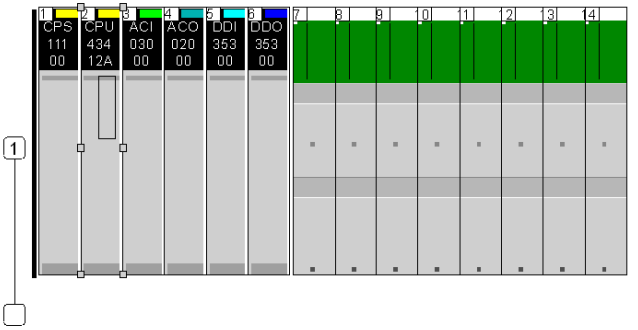
3	Doubleclick on the left mouse button **Result:** A sub-dialog appears
4	Choose one of the following options: ● None ● DIO bus ● Peer Cop

140 CPU 311 10 Specifications

General Specifications

Communication ports	2 Modbus (RS-232) 1 Modbus Plus (RS-485)
Bus current required	1250 mA
Max. number of NOM, NOE, PTQ PDP MV1 and MMS modules supported (any combination)	2
Key switch	No

Processor

Model	Intel 486
Math processor	No
Watchdog timer	250 ms S/W adjustable

Memory

RAM	2 Mb
IEC program memory (max.)	400 kb
Flash	2 Mb

Reference Capacity

Discrete (bits)	51712 b (any mix)
Registers (words)	9672 max.

Local I/O

Max. I/O words	unlimited I/O
Max. I/O racks	2

Remote I/O

Max. I/O words per drop	64 in / 64 out*
Max. number of remote drops	31
* This information can be a mix of discrete or register I/O. For each word of configured I/O, one of the I/O words must be subtracted from the total available.	

Distributed I/O

Number of networks per system	1 (3**)
Max. words per network	500 IN and 500 OUT For every DIO drop, there is a minimum of two words input of overhead
Max. words per node	30 in / 32 out
Max. number of DIO drops per network	64
** Requires the use of the 140 NOM 21• 00 option module.	

Battery and Clock

Type	3 V Lithium
Service life	1200 mAh
Shelf life	10 years with 0.5% loss of capacity per year
Battery load current @ power-off	typical: 5 µA max. 110 µA
TOD clock	+/- 8.0 s/day @ 0 ... 60 °C

Diagnostics

Power-up	RAM RAM address Executive checksum User logic check Processor
Run time	RAM RAM address Executive checksum User logic check

140 CPU 434 12A Specifications

General Specifications

This module is functionally identical to the non-A version. However, the following should be considered:

- If you are using the module in a Hot Standby topology, then you must use either two non-"A" models or two "A" models.
- The "A" version requires a new flash executive.
- The "A" version and non-"A" flash executives are not interchangeable.
- Schneider Electric software supports the "A" version. Any existing or new 140 CPU 434 12 program configuration will load into a 140 CPU 434 12A without any modifications.

Communication ports	2 Modbus (RS-232)
	1 Modbus Plus (RS-485)
Bus current required	1250 mA
Max. number of NOM, NOE, PTQ PDP MV1 and MMS modules supported (any combination)	6
Key switch *(see page 103)*	Yes

NOTE: This CPU can support up to 3 modbus network

Processor

Model	Intel 486
Clock speed	66 MHz
Math processor	Yes, on-board
Watchdog timer	250 ms S/W adjustable

Memory

RAM	2 Mbytes
Flash	1 Mbyte
IEC 1131-3 program memory (max.)	896 kbytes

Reference Capacity

Registers	64 k

Local I/O

Max. I/O words	unlimited I/O
Max. I/O racks	2

Remote I/O

Max. I/O words per drop	64 in / 64 out*
Max. number of remote drops	31
* This information can be a mix of discrete or register I/O. For each word of configured I/O, one of the I/O words must be subtracted from the total available.	

Distributed I/O

Number of networks per system	1 (3**)
Max. words per network	500 in / 500 out For every DIO drop, there is a minimum of two words input of overhead
Max. words per node	30 in / 32 out
Max. number od DIO drops/network	64
** Requires the use of the 140 NOM 21• 00 option module.	

Battery and Clock

Type	3 V lithium	
Service Life	1200 mAh	
Shelf life	10 years with 0.5% loss of capacity per year	
Battery load current @ power-off	typical: 7 µA	
	max. 210 µA	
TOD clock	+/- 8.0 s/day @ 0 ... 60 °C	

Diagnostics

Power-up	RAM RAM address Executive Checksum User Logic Check Processor
Run time	RAM RAM address Executive Checksum User Logic Check

140 CPU 534 14A/U Specifications

General Specifications

This module is functionally identical to the non-A version. However, the following should be considered:

- If you are using the module in a Hot Standby topology, then you must use either two non-A models or two A/U models.
- The A/U model requires a new flash executive.
- The A/U and the non-A flash executives are not interchangeable.
- Schneider Electric software supports the A/U model. Any existing or new 140 CPU 534 14 program configuration will load into a 140 CPU 534 14A/U without any modifications.

Communication ports	2 Modbus (RS-232)
	1 Modbus Plus (RS-485)
Bus current required	1250 mA
Max. number of NOM, NOE, PTQ PDP MV1 and MMS modules supported (any combination)	6
Key switch *(see page 103)*	Yes

NOTE: This CPU can support up to 3 modbus network

Processor

Model	Intel 586 DX
Clock speed	133 MHz
On-board math processor	Yes, on-board
Watchdog timer	250 ms S/W adjustable

Memory

RAM	4 Mb
Flash	1 Mb
IEC 1131-3 program memory (max.)	2.7 Mb

Reference Capacity

Discrete (bits)	64 kb (any combination)
Registers (words)	57 kb max.

Local I/O

Max. I/O words	unlimited I/O
Max. I/O racks	2

Remote I/O

Max. I/O words per drop	64 in / 64 out*
Max. number of remote drops	31
* This information can be a mix of discrete or register I/O. For each word of configured I/O, one of the I/O words must be subtracted from the total available.	

Distributed I/O

Number of networks per system	1 (3**)
Max. words per network	500 in / 500 out For every DIO drop, there is a minimum of two words input of overhead
Max. words per node	30 in / 32 out
Max. number of DIO drops per network	64
** Requires the use of the 140 NOM 21• 00 option module.	

Battery and Clock

Type	3 V lithium
Service life	1200 mAh
Shelf life	10 years with 0.5% loss of capacity/year
Battery load current @ power-off	typical: 14 µA max. 420 µA
TOD clock	+/- 8.0 s/day @ 0 ... 60 °C

Diagnostics

Power-up	RAM RAM address Executive checksum User logic check Processor
Run time	RAM RAM address Executive checksum User logic check

140 CPU 534 14B/U Specifications

General Specifications

This module is functionally identical to the non-B version. However, the following should be considered:

- If you are using the module in a Hot Standby topology, then you must use either two non-B models or two B/U models.
- The B/U model requires a new flash executive.
- The B/U and the non-B flash executives are not interchangeable.
- Schneider Electric software supports the B/U model. Any existing or new 140 CPU 534 14 program configuration will load into a 140 CPU 534 14B/U without any modifications.

Communication ports	2 Modbus (RS-232)
	1 Modbus Plus (RS-485)
Bus current required	1250 mA
Max. number of NOM, NOE, PTQ PDP MV1 and MMS modules supported (any combination)	6
Key switch *(see page 103)*	Yes

NOTE: This CPU can support up to 3 modbus network

Processor

Model	Intel 486 DX4
Clock speed	100 MHz
On-board math processor	Yes, on-board
Watchdog timer	250 ms S/W adjustable

Memory

RAM	4 Mb
Flash	1 Mb
IEC 1131-3 program memory (max.)	2.7 Mb

Reference Capacity

Discrete (bits)	64 kb (any combination)
Registers (words)	57 kb max.

Local I/O

Max. I/O words	unlimited I/O
Max. I/O racks	2

Remote I/O

Max. I/O words per drop	64 in / 64 out*
Max. number of remote drops	31
* This information can be a mix of discrete or register I/O. For each word of configured I/O, one of the I/O words must be subtracted from the total available.	

Distributed I/O

Number of networks per system	1 (3**)
Max. words per network	500 in / 500 out For every DIO drop, there is a minimum of two words input of overhead
Max. words per node	30 in / 32 out
Max. number of DIO drops per network	64
** Requires the use of the 140 NOM 21• 00 option module.	

Battery and Clock

Type	3 V lithium
Service life	1200 mAh
Shelf life	10 years with 0.5% loss of capacity/year
Battery load current @ power-off	typical: 14 µA max. 420 µA
TOD clock	+/- 8.0 s/day @ 0 ... 60 °C

Diagnostics

Power-up	RAM RAM address Executive checksum User logic check Processor
Run time	RAM RAM address Executive checksum User logic check

High End CPU

9

Purpose

This chapter provides information on the High End Controller modules.

Quantum SIL2 Hot StandBy Offer

Read thoroughly the *Quantum Safety PLC - Safety Manual* (part number 33003879) to build a safety PLC according to the safety certifications. Schneider Electric provides a range of products that are certified to be used in a IEC 61508 and SIL2 safety system.

This range includes:
- safety CPU modules (140 CPU 651 60S and 140 CPU 671 60S)
- safety I/O modules (140 SAI 940 00S, 140 SDI 953 00S, 140 SDO 953 00S)
- non-interfering modules
- Unity Pro XLS

NOTE: If remote racks or hot standby functionality is required, you can use the safety modules with existing Quantum remote I/O modules (140 CRP 932 00 and 140 CRA 932 00 only). If other I/O modules are present in the rack, they must either be certified non-interfering modules or they must be removed or exchanged for certified non-interfering modules that will provide similar capability.

What's in this Chapter?

This chapter contains the following topics:

Topic	Page
Physical Presentation and Mounting of Standard High End Modules	135
Standalone Safety CPU	137
Physical presentation and mounting of Hot StandBy High End modules	139
Hot Standby Safety CPU Specifics	140
Controls and Displays	143
Indicators	147
Modbus port	149
Using the LCD Display Screens	151
Processor Configuration Screen	162
140 CPU 651 50 Specifications	164
140 CPU 651 60 Specifications	167
140 CPU 651 60S Specifications	170
140 CPU 652 60 Specifications	172
140 CPU 671 60 Specifications	174
140 CPU 671 60S Specifications	177
140 CPU 672 61 Specifications	179

Physical Presentation and Mounting of Standard High End Modules

Illustration

The figure shows a standard High End module and its components.

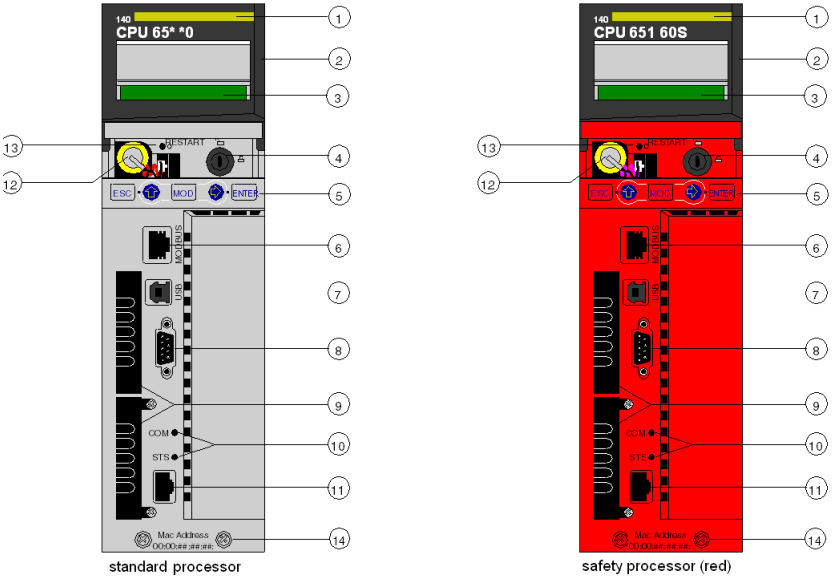

1 model number, module description, color code
2 lens cover (open)
3 LCD display (here covered by the lens cover)
4 key switch
5 keypad (with 2 red LED indicators)
6 modbus port (RS-232) (RS-485)
7 USB port
8 Modbus Plus port
9 PCMCIA slots (A and B)
10 LED indicators (yellow) for Ethernet communication
11 Ethernet port
12 battery (user installed)
13 reset button
14 2 screws

NOTE: Quantum High End processors are equipped with two receptacles (A and B) in which to install Schneider PCMCIA cards (other cards are not accepted).

Mounting

Mounting the module onto the central back plane:

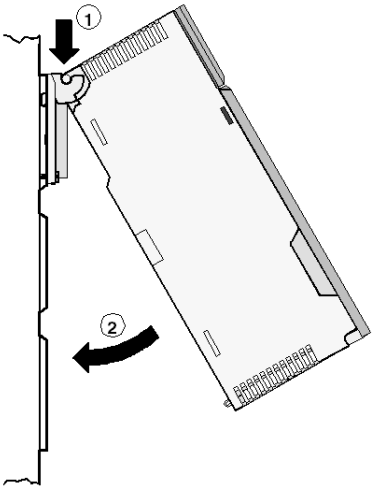

1 Hang the module.
2 Screw the module to the back plane.

Standalone Safety CPU

Introduction

For use in standalone SIL3 solutions, the **140 CPU 651 60S** Quantum Safety CPU is certified

The safety CPU includes a PCMCIA memory card *(see Modicon Quantum, Quantum Safety PLC, Safety Reference Manual)*, but its use and presence is not mandatory.

Description of the Internal CPU Architecture

The Quantum Safety CPU contains 2 different processors, an Intel Pentium and an application processor. Each one executes the Safety logic in its own memory area and both compare the results of the execution at the end of each cycle.

Two CPUs are available:

- 140 CPU 651 60S (Standalone Safety CPU)
- 140 CPU 671 60S (Hot Standby Safety CPU)

The following figure shows the internal architecture of the Quantum Safety CPU:

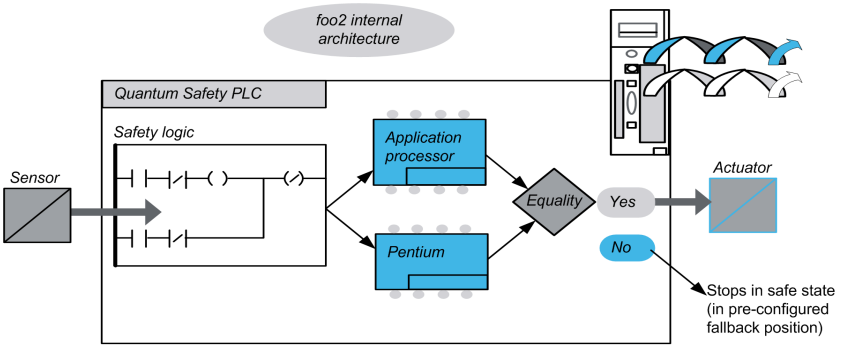

Benefits of the Double Code Generation and Execution

The 2 processors inside the Quantum Safety PLC allow double code generation and execution.

This diversity provides the following advantages in error detection:

- 2 executable codes are generated independently. The diversity of compilers allows the detection of systematic error in the code generation.
- The 2 generated codes are executed by 2 different processors. Thus, the CPU is able to detect both systematic errors in the code execution and random errors in the PLC.
- 2 independent memory areas are used for the 2 processors. Thus, the CPUs are able to detect random errors in the RAM and a full RAM test is not necessary at every scan.

Description of the Watchdog

A hardware and a firmware watchdog check the PLC activity and the time needed to execute the user logic.

NOTE: You must configure the software watchdog (maximum PLC cycle time) to be consistent with the application execution time, the filtering of the I/O communication error, and the process Safety time (PST) targeted, see also *Modicon Quantum, Quantum Safety PLC, Safety Reference Manual*.

Description of the Memory Check

Static memory areas, including the Flash memory, PCMCIA memory card *(see Modicon Quantum, Quantum Safety PLC, Safety Reference Manual)* (if any) and the RAM, are checked using the cyclic redundancy check (CRC) and the double code execution. Dynamic areas are protected by the double code execution and a periodic memory test. At cold start, these tests are re-initialized and fully performed before the CPU goes into Stop or Run mode.

Physical presentation and mounting of Hot StandBy High End modules

Illustration

The figure shows an Hot StandBy High End module and its components.

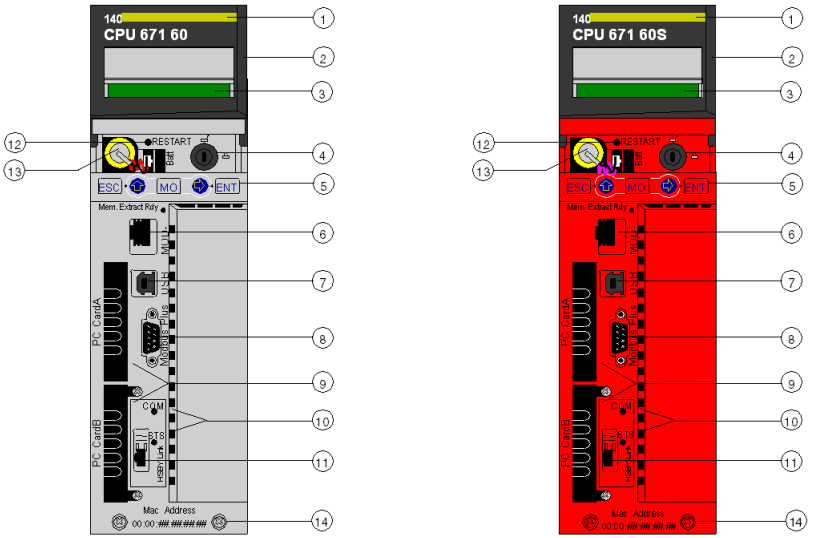

standard HSBY processor

safety HSBY processor (red)

1 model number, module description, color code
2 lens cover (open)
3 LCD Display (here covered by lens cover)
4 key switch
5 keypad (with 2 red LED indicators)
6 Modbus port (RS-232) (RS-485)
7 USB port
8 Modbus Plus port
9 PCMCIA slots A and B
10 LED indicators (yellow) for Ethernet communication
11 HSBY fiber optic communication port
12 reset button
13 battery (user installed)
14 2 screws

NOTE: Quantum High End processors are equipped with two receptacles (A and B) in which to install Schneider PCMCIA cards (other cards are not accepted).

Hot Standby Safety CPU Specifics

Introduction

The 140 CPU 671 60S Quantum Safety CPU module is certified for use in Hot Standby SIL3 solutions compliant to 61508 IEC standard. For more details according to the safety certifications see the Quantum Safety PLC *(see Modicon Quantum, Quantum Safety PLC, Safety Reference Manual)*.

In a Hot Standby configuration, 1 CPU is the Primary CPU and the other is the Standby CPU.

The Hot Standby Safety CPU differs from the standalone Safety CPU in the use of the Ethernet port. In the standalone Safety CPU, it is used to communicate with other devices using a normal Ethernet cable. In the Hot Standby Safety CPU, it is used to exchange data between the Primary CPU and the Standby CPU controller using a fiber optic link. Because the fiber optic link is not part of the Safety loop, the PFD and PFH values of the Hot Standby CPU are the same as those of the standalone CPU. Each Safety CPU includes a PCMCIA memory card *(see Modicon Quantum, Quantum Safety PLC, Safety Reference Manual)*, but its use and presence is not mandatory.

Description of the Hot Standby Configuration

The Hot Standby configuration contains 2 identical local racks and at least 1 remote I/O drop because I/Os cannot be placed in the local rack of a Hot Standby configuration.

Besides a power supply module (must be at least one 140 CPS 124 20), each local rack must consist of both a:

- 140 CPU 671 60S module
- 140 CRP 932 00 module

Besides a power supply and I/O modules (must be at least one 140 CPS 124 20), the remote drop(s) must include a 140 CRA 932 00 module.

⚠ CAUTION

UNINTENDED EQUIPMENT OPERATION

Only high availability RIO modules, which provide dual cabling, are allowed in a Safety-Related System.

Failure to follow these instructions can result in injury or equipment damage.

For Hot Standby configuration example, refer to the information on Connecting the Remote I/O *(see Modicon Quantum, Hot Standby with Unity, User Manual)*.

Description of the Operating Modes

The Hot Standby Safety PLC can run in Safety Mode and in Maintenance Mode.

- **Safety Mode:** The Safety Mode is the default mode of the Quantum PLC. It is a restricted mode in which modifications and maintenance activities are prohibited.
- **Maintenance Mode:** The Maintenance Mode of the Quantum Safety PLC is a temporary mode for modifying the project, debugging and maintaining the application program.

State Compatibility with Safe and Maintenance Modes

- **Redundant configuration (1 CPU is primary, 1 is standby)**
  The Standby CPU controller mode follows the Primary CPU controller mode. For example, if you switch the Primary CPU controller from Safety to Maintenance mode, the Standby CPU controller switches from Safety to Maintenance mode at the start of the next cycle.
- **Non-redundant configuration (at least 1 CPU offline)**
  The two controllers are independent, one can be in Safety mode and the other one in Maintenance mode. For example, the Run Prim controller can be in Safety mode while the Stop OffL controller is in Maintenance mode.

Impact of the PLC Switch on the Process Safety Time

If the primary CPU detects an internal or external problem, it stops exchanging data with the Standby CPU and stops processing the I/O. As soon as the Standby CPU detects that there is no more exchange with the primary CPU, it takes over the role of the primary CPU, executing the user logic and processing the I/O. Therefore, the output modules must filter the lack of exchange with the primary CPU to avoid glitches when a switch occurs. This is achieved by configuring the output module timeout. As a result, the PLC reaction time is greater than the timeout configured in the output module, thereby influencing the process Safety time.

NOTE: The behavior of the Hot Standby Safety CPU is equivalent to that of the standalone Safety CPU.

In case of a detected error, the PLC enters:

- Halt state when running in Maintenance Mode.
- Error state when running in Safety Mode.

Availability of the Hot Standby Functions

In addition to the standard Hot Standby functions, you can use an EFB to program an automatic swap between primary CPU and Standby CPU PLC in order to verify the ability of the Standby CPU PLC to take over from the primary CPU. That means that the Standby CPU PLC periodically becomes the primary CPU and the primary CPU PLC the Standby CPU.

It is recommended to avoid using the USB link during swap.

The following table lists the available Hot Standby functions in Maintenance Mode and Safety Mode:

Function	Maintenance Mode	Safety Mode
Hot Standby	yes	yes
Switch Over	yes	yes
EFB Swap	no	yes
Keypad	yes	yes
application mismatch	yes	no
OS Upgrade	yes, if Standby is in Stop Offline	no
Application Transfer	yes	no

For details of how to configure and operate Quantum Hot Standby systems, see the Modicon Quantum Hot Standby with Unity User Manual *(see Modicon Quantum, Hot Standby with Unity, User Manual)*.

Controls and Displays

Lens Cover

The protective lens cover can be opened by sliding upwards.

With the lens cover open you have access to the following items:
- key switch
- battery
- reset button

Key Switch

The key switch is a security feature and a memory protection switch. The key switch has two positions: locked and unlocked. The key switch is only read and deciphered by the PLC OS (executive) portion of the firmware and not by the OS loader portion.

The Quantum High End processor has a set of system menus that enable the operator to:
- perform PLC operations (i.e., start PLC, stop PLC)
- display module parameters (i.e., communications parameters)
- switch to the maintenance mode (Safety processors)

The effect of the key position is shown below:

Key Position	PLC Operation
unlocked:	● System menu operations can be invoked and changeable module parameters can be modified by the operator with the LCD and keypad. ● Memory protection is OFF. ● You can switch to Maintenance mode (Safety processors).
locked: 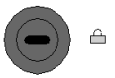	● No system menu operations can be invoked and module parameters are read-only. ● Memory protection is ON. ● Safe mode forced (Safety processors).
Switching the key switch position from locked to unlocked or vice versa turns on the LCD's backlight.	

NOTE: For more explanations about Maintenance and Safe mode of Safety processors *(see Modicon Quantum, Quantum Safety PLC, Safety Reference Manual)*

Reset Button

When pressed, this button forces a cold start of the PLC.

LCD Display

The high-end CPU with Unity has a standard 2-line by 16-character liquid crystal display (LCD) with changeable backlight state and contrast:

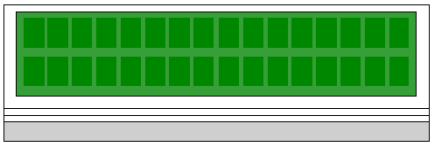

The backlight handling is entirely automated to save the life of the LCDs. The backlight turns on when one of the following occurs:

- a key is pressed
- the key switch state is changed
- an error message is displayed on the LCD

The backlight will stay on for error messages as long as the error message is displayed otherwise, the backlight automatically turns off after five minutes.

Adjusting the Contrast

The contrast is adjustable from the keypad when the Default screen is displayed.

Step	Action	
1	Press the `MOD` key:	
2	To adjust the contrast darker press:	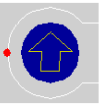
3	To adjust the contrast lighter press:	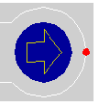
4	To confirm the setting press:	

Keypad

The high-end processor has a keypad with five keys that are mapped to a hardware address. On each of the two arrow keys is an LED:

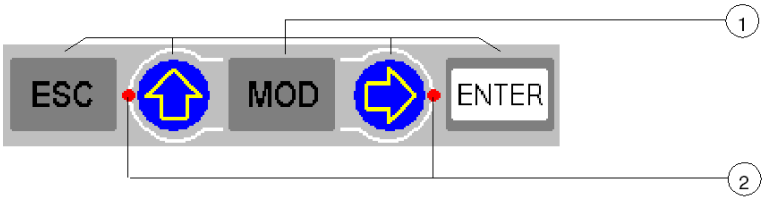

1 5 keys
2 2 LEDs

Using the Keys

Keypad functionalities

Key	Function	
ESC	To cancel an entry, or suspend or stop an action in progress To display the preceding screens successively (step up the menu tree)	
ENTER	To confirm a selection or an entry	
MOD	To set a field on the display into modify mode	
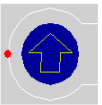	LED: on	key active ● To scroll through menu options ● To scroll through modify mode field options
	LED: flashing	key active ● Field in modify mode has options to scroll through
	LED: off	key inactive ● No menu options, no field options

Key	Function	
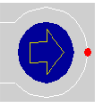	LED on	key active ● To move around in a screen, field to field ● To go to the sub-menu
	LED flashing	key active ● To move around in a field that is in modify mode, digit to digit
	LED off	key inactive ● No sub-menu for menu option ● No moving around in a screen ● No moving around in a field

Indicators

Overview

The High End processors use two types of indicators:

1. LCD display: The Default Screen *(see page 152)* serves as a Controller status screen.
2. LED Indicators: The functionality of the LEDs is described in a table after the figure.

The following figure shows the two types of indicators.

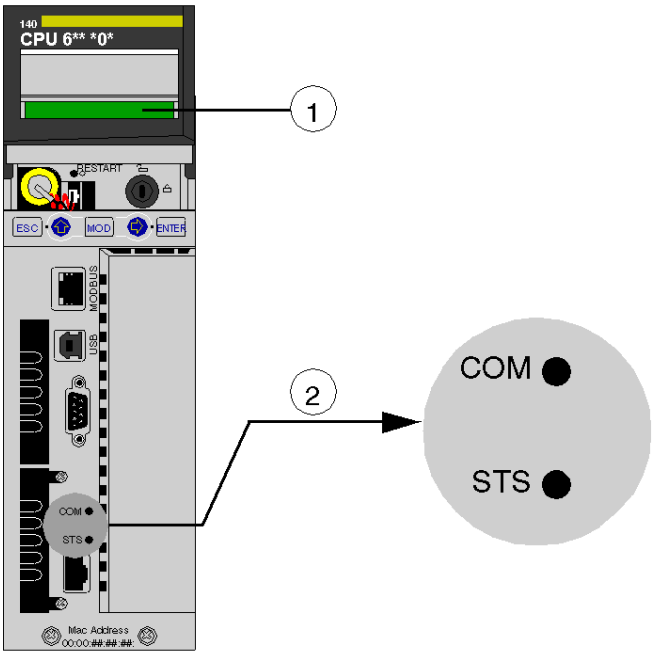

High End processors

1 LCD Display (lens cover closed)
2 LED Indicators

LED Description

The following table shows the description for the LED indicators of the different High End CPU modules.

LEDs	Indication		
	Standard Processors **140 CPU 65* *0 / 140 CPU 651 60S**		**Hot StandBy Processors** **140 CPU 671 60 / 140 CPU 671 60S / 140 CPU 672 61**
COM (yellow)	Controlled by the Coprocessor hardware ● Indicates Ethernet activity		Controlled by the Coprocessor hardware ● Indicates Primary or Standby activity
STS (yellow)	Controlled by the Coprocessor software		Controlled by the Coprocessor firmware ● Blinking: system is redundant and data are exchanged from the Primary to Standby controller ● ON: system not redundant / Copro booting from power-on to end of self-tests ● OFF: Copro auto tests were not successfull
	ON	Normal	
	OFF	Copro auto tests unsuccessful. Possible hardware problem.	
	Flashing:		
	1 Flash	Configuration in progress. Temporary situation.	
	2 Flashes	Invalid MAC address	
	3 Flashes	Link not connected	
	4 Flashes	Duplicate IP Address. Module is set to its default IP address.	
	5 Flashes	Waiting for IP address from address server	
	6 Flashes	Invalid IP address. Module is set to its default IP address.	
	7 Flashes	Firmware incompatibility between PLC OS and Copro firmware	

Modbus port

Overview

In front of the CPU the Modbus port is of type RJ45.

The network topology is determined by a protocol:

- for RS-232, it's a point to point topology,
- for RS-485, it's a bus topology with processor as master.

Connections on RJ45 are different, according to selected protocol. In configuration window of a 140 CPU 6•• •• Quantum PLC, the protocol is selected in tab **Port Modbus**.

Pinouts

Illustration:

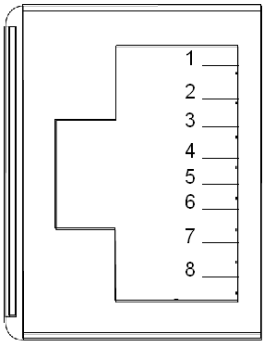

The table following presents the pinouts of RS-232 and RS485 protocols:

Pin	RS-232 Signal	RS-485 Signal
1	DTR	D-
2	DSR	D+
3	TxD	
4	RxD	Not used
5	GND	GND
6	RTS	
7	CTS	Not used
8	GND (optional)	GND (optional)

NOTE: For RS-485 protocol pins 1 and 6 must be short circuited as well as pins 2 and 3.

RS232/RJ45 adapter

To connect PC-AT computers that have a 9-pin RS-232 port to the 8-pin RJ45 Modbus port on the 140 CPU 651 •0 and 140 CPU 671 60, you must connect the 110 XCA 020 300 adapter (9-pin/RJ45) on the PC with the straight 110 XCA 28 202 cable (8-pin RJ45 to 8-pin RJ45).

The following figures show the 9-pin adapter front view (left) and side view (right).

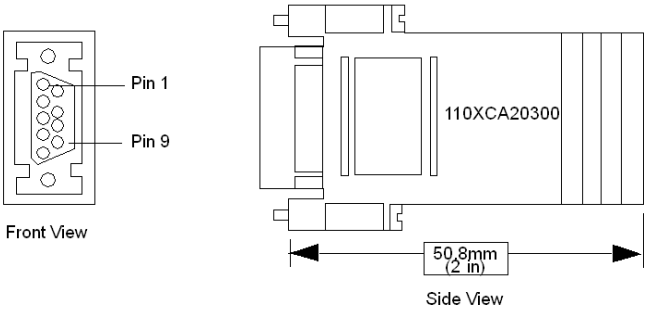

Connector Pinouts Figure

The following figure shows the 9-pin RJ45 connector schematic.

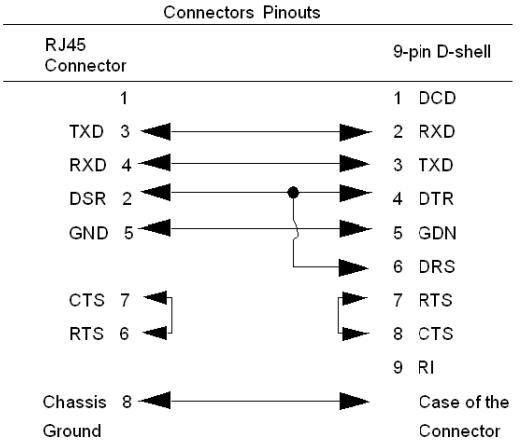

Using the LCD Display Screens

Overview

The controller's LCD displays messages. These messages indicate the controller's status. There are four levels of menus and submenus. Menus are accessed using the keypad *(see page 145)* on the front of the controller.

For detailed information about the menus and submenus see:

- PLC Operations Menus and Submenus *(see page 154)*
- Using the Communications Menus and Submenus *(see page 157)*
- Using the LCD Settings Menus and Submenus *(see page 159)*
- Using the System Info Menus and Submenus *(see page 160)*

Structure: LCD display menus and submenus

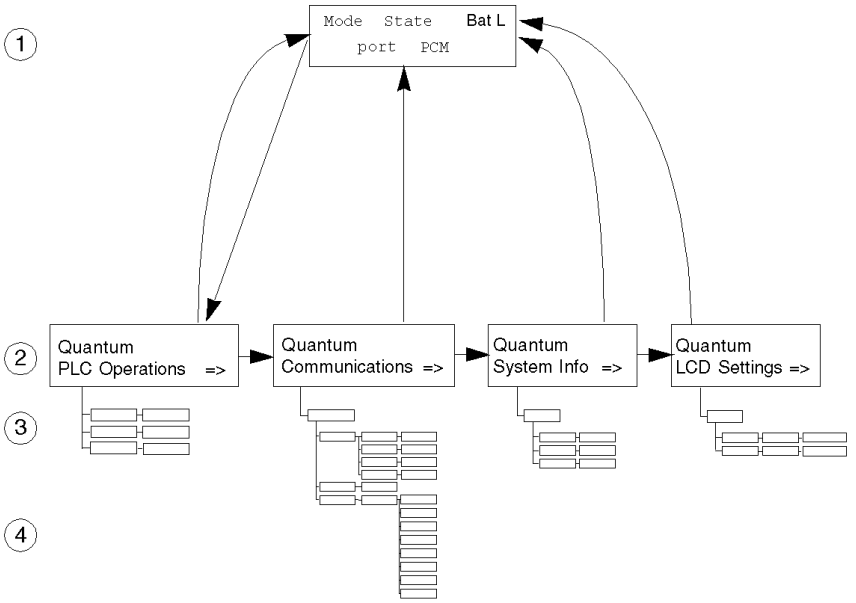

1 Default Screen
2 System Menus
3 Sub Menus
4 Sub Screens

Accessing the Screens

Use the keys on the keypad to access the system menus and submenus.

Step	Action
1	To access the screens, ensure that the key switch is in the unlocked position. 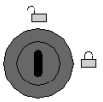
2	To step down to a lower menu, operate one of the following keys: 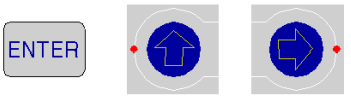
3	To return to the previous menu, press:

Default Screen

The Default screen displays the following information.

```
Mode   State    Bat L
    port    PCM
```

The default screen is read-only.

Fields Available	Options Available	Description
Mode	M	Maintenance Mode (on safety processors only)
	S	Safe Mode (on safety processors only)
State	RUN	application program is running
	RUN Prim	RUN as primary CPU processor (HotStandBy processors only)
	RUN Stby	RUN as standby CPU processor (HotStandBy processors only)
	RUN OffL	RUN offline (HotStandBy processor not connected to another processor)
	STOP	application program is NOT running
		STOP offline
	No Conf	processor has no application program
	Halt	detected state error (in maintenance mode for safety modules)

Fields Available		Options Available	Description
BatL			indicates battery health: ● steady = battery is low ● no message = battery is OK
Port	USB		indicates that port has activity
	Modbus Plus	MB+	indicates Modbus Plus activity
		mb+	no activity
		Dup	Duplicate MB+ address
		ERR	Modbus communications Error
		INI	Initial Network Search
	Modbus	232	serial port activity for RS-232
		485	serial port activity for RS-485
	PCM	1	displayed status indicates battery health of the PCMCIA card in slot 1: ● steady = battery is OK ● flashing = battery is low (only for green PCMCIAs (PV<04)) *
		2	displayed status indicates battery health of the PCMCIA card in slot 2: ● steady = battery is OK ● flashing = battery is low (only for green PCMCIAs (PV<04)) *
		* With blue PCMCIAs (PV>=04), when main battery is low there is no flash.	

PLC Operations Menu

Structure: PLC Operations menu and submenus

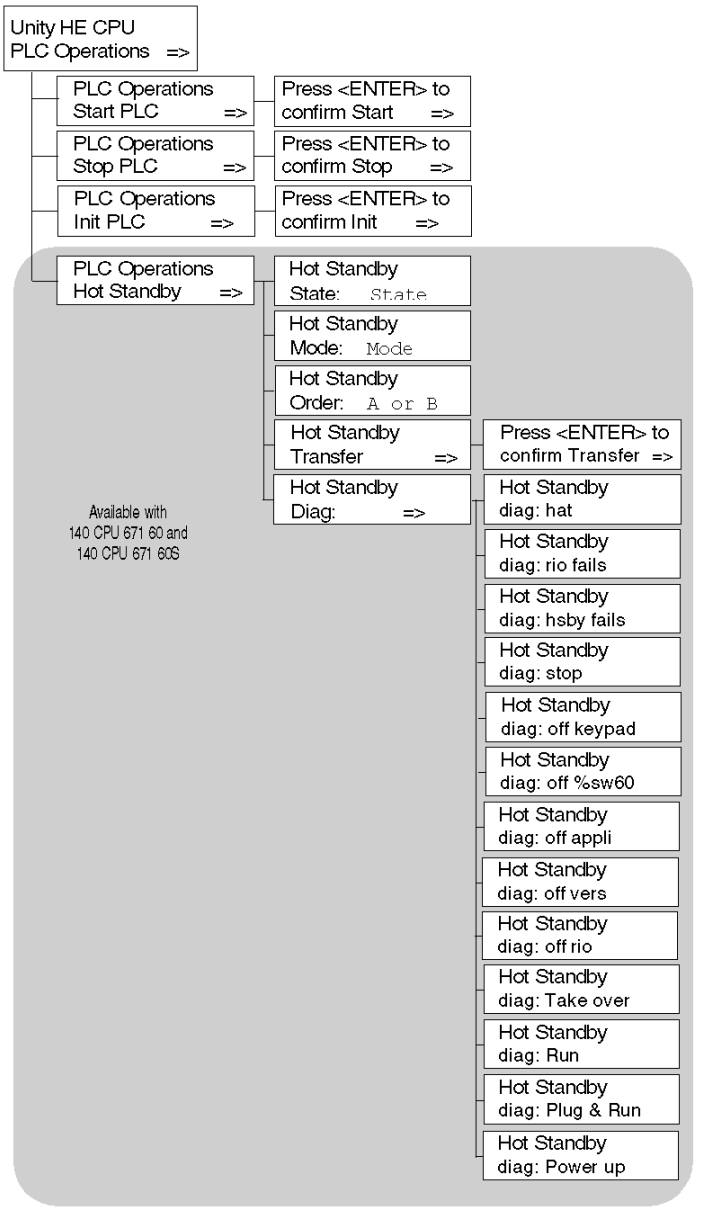

Submenu: PLC Operations: Start, Stop, Init

Start, Stop, Init Screens Display	**Fields Available**	**Description**
Start PLC	Press <ENTER> to confirm Start	Pressing <ENTER> starts the controller
Stop PLC	Press <ENTER> to confirm Stop	Pressing <ENTER> stops the controller
Init PLC	Press <ENTER> to confirm Init	Pressing <ENTER> initializes the controller On safety processors, this command is only available in maintenance mode

Submenu: PLC Operations Hot Standby CPU

Screen	**Field**	**Option**		**Description**
Hot Standby State:	`State` read only	PRIMARY CPU		Controller serves as primary CPU unit
		STANDBY CPU		Controller serves as standby CPUunit
		Offline		Controller not connected to another
Hot Standby Mode:	`Mode` (modifiable only if the key switch is in the unlocked position)	RUN	STS steady	Controller is active and is either serving as primary CPU controller or able to take over the primary CPU role if needed
			STS flashing	Controller is transferring/updating and when the transfer is done, RUN will stay on steady
		OFFLINE	STS steady	Controller is taken out of service without stopping it or disconnecting it from power If the controller is the primary CPU unit when the Mode state is changed to OFFLINE, control switches to the standby CPU unit. If the standby CPU controller is taken OFFLINE, the primary CPU unit continues to operate without a backup
			STS flashing	Controller is transferring/updating and when the transfer is done, OFFLINE will stay on steady
Hot Standby Order:	`A or B` (modifiable only if the key switch is in the unlocked position)	FIRST		Hot Standby Power Order
		SECOND		

Screen	Field	Option	Description
Hot Standby Transfer:	- (this menu option is only enabled, if the key switch is in the unlocked position)		Pressing the <ENTER> key confirms the Transfer. The transfer will initiate the request of a program update from the primary CPU controller. Pressing any other key will cancel the Transfer initiation and returns the Hot Standby Transfer menu option screen to the display.
Hot Standby Diag:	Oder of diagnostic screen varies with the orperation.		
	Halt		User's task in halt mode
	RIO fails		Detected error reported by RIO head
	HSBY fails		Detected error reported by optical link
	Stop		Stop command ordered
	Off keypad		Offline commandentered on keypad
	Off %SW60		Offline command set in command register
	Off appli		Offline due to application mismatch
	Off vers		Offline due to PLC or Copro OS mismatch
	Off RIO		Offline due to Remote IO error
	Take over		Standby CPU switched to primary CPU mode
	Run		Run command ordered
	Plug & Run		Standby CPU plugged and started
	Power up		PLC has just started, no message

Communications Menu

Structure: Communications menu and submenus structure

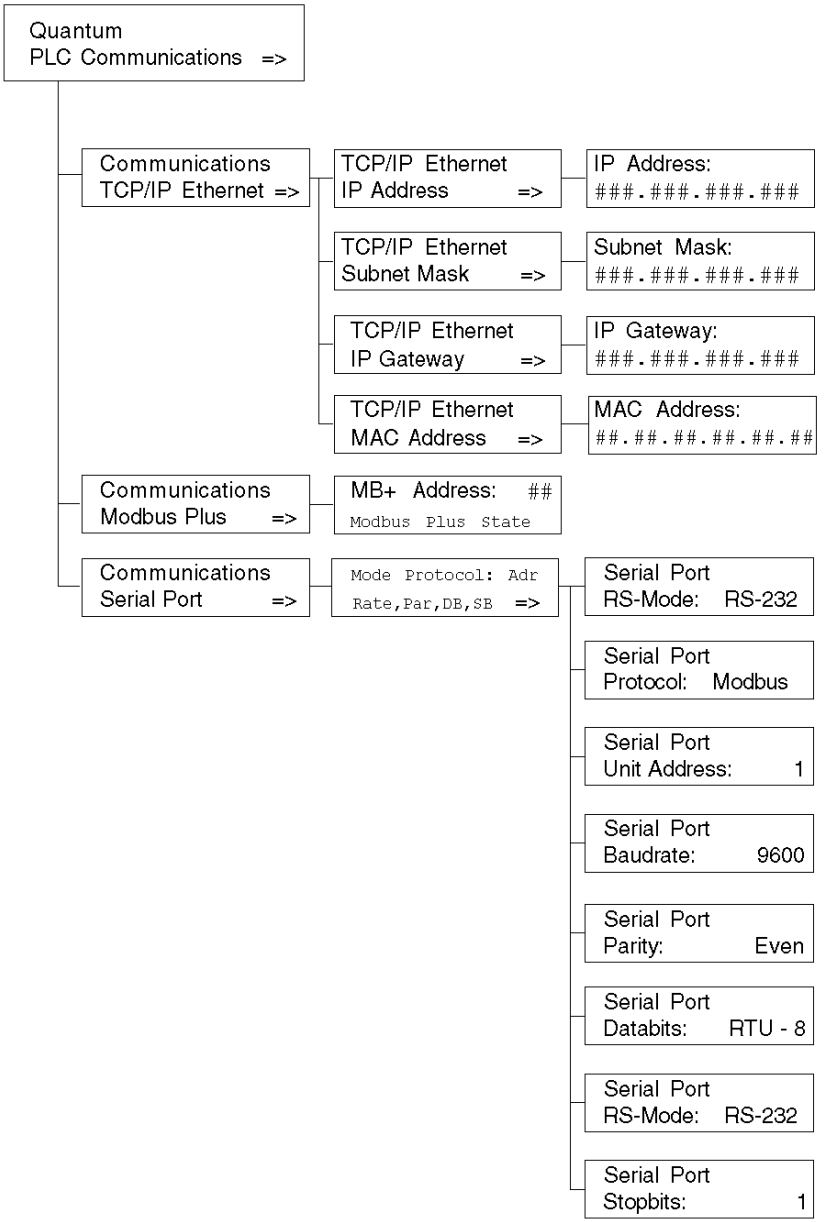

Submenu: PLC Communications: TCP/IP Ethernet

TCP/IP Ethernet Screen Displays	Fields Available	Options Available	Description
TCP/IP Ethernet IP Address [1,2]	###.###.###.###	decimal numbers	displays IP address
TCP/IP Ethernet Subnet Mask [1,2]	###.###.###.###	decimal numbers	displays Subnet Mask address
TCP/IP Ethernet IP Gateway [1,2]	###.###.###.###	decimal numbers	displays Ethernet IP Gateway address
TCP/IP Ethernet MAC Address	##.##.##.##.##.## (read only)	hexadecimal numbers	displays MAC (Medium Access Control) address

[1)]Parameters can be modified only if no applications have been downloaded (NO CONF state).

[2)]When a new PLC application has been downloaded, the ethernet address on the screen is only updated after accessing the upper level of the menu structure.

Submenu: PLC Communications: Modbus Plus

Fields Available	Options Available	Description
## (modifiable only if the key switch is in the unlocked position)	1-64	to enter a valid Modbus Plus address
Modbus Plus State	Monitor Link	Modbus Plus State
	Normal Link	
	Sole Station	
	Duplicate address	
	No Token	

Submenu: PLC Communications: Serial Port

Fields Available*	Options Available	Description
Mode	232	RS mode
	485	
Protocol	ASCII	Protocols available
	RTU	
Adr	1 - 247	Unit address
	for Modbus switchover Primary CPU 1-119 Standby CPU 129 - 247	

Fields Available*	Options Available	Description
Rate	50, 75, 110, 134.5, 150, 300, 600, 1200, 1800, 2400, 3600. 4800, 7200, 9600, 19200 bits/s	Baud rate
Par	NONE	Parity
	ODD	
	EVEN	
DB	7,8	Databits: if Protocol is Modbus then RTU-8 or ASCII-7
SB	1,2	Stopbits
*If the key switch is in the unlocked position, fields are modifiable.		

System Info Menu

Structure: System Info menus and submenus

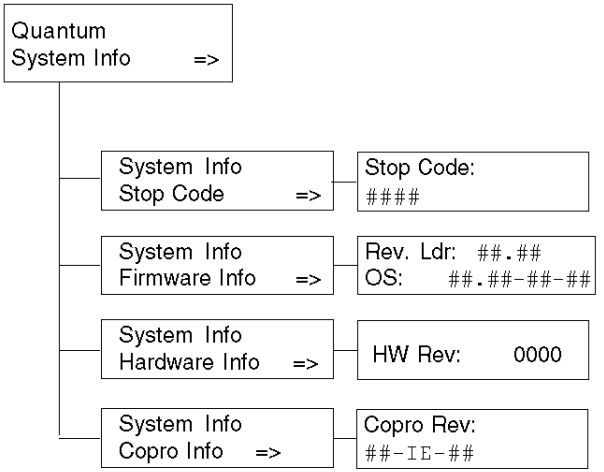

Submenu: PLC Communications: System Info

System Info Screen Displays	Fields Available*	Option Available	Description
Stop Code	####		machine stop code
	Description		description of the machine stop code
Firmware Info	Rev.Ldr : ##.##		Exec Revision
	OS: ##.##-##-##		OS loader Revision
Hardware Info	HW Rev: 0000		Hardware Revision
Copro Info	##-IE-##		Copro Revision
*Fields are read only.			

LCD Settings Menu

Structure: LCD Settings menus and submenus

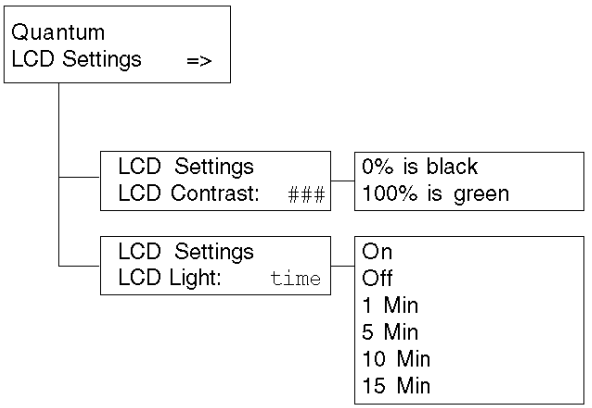

Submenu: LCD Settings: LCD Contrast

LCD Screen Contrast Screen Displays	Fields Available	Description
LCD Contrast:	`####`	A lower percent is darker. A higher percent is brighter. Use the arrow keys to adjust the setting: ● Up arrow increases percent ● Down arrow decreases percent

Submenu: LCD Settings: LCD Light

Screen Displays	Fields Available	Description
LCD Light:	`On`	LCD remains on permanently or until changed
	`Off`	LCD remains off permanently or until changed
	`1 Min`	LCD remains on for one minute
	`5 Min`	LCD remains on for five minutes
	`10 Min`	LCD remains on for ten minutes
	`15 Min`	LCD remains on for fifteen minutes

Processor Configuration Screen

Accessing with Unity Pro

After starting Unity Pro, go to the Local Bus in the Structural View of the Project Browser.

Step	Action
1	Double-click on Local Bus to open the Local Bus configuration editor .
2	Select the CPU module and right-click. The context menu appears. 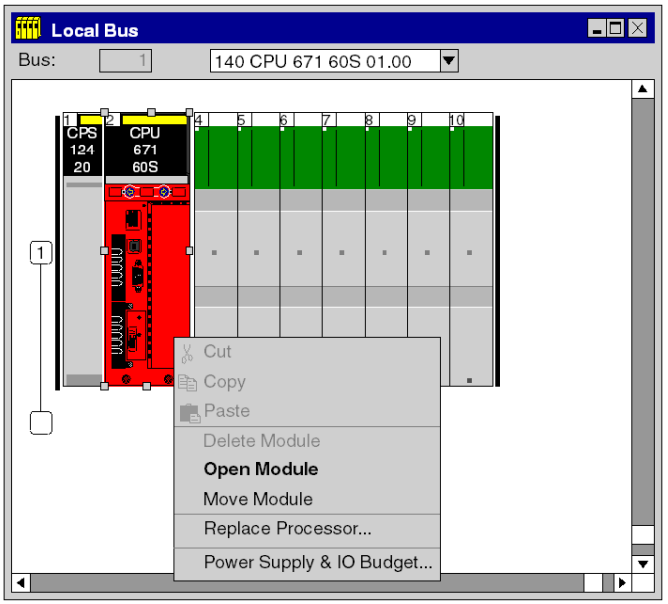

Step	Action
3	Select Open Module. The editor appears.
4	Choose one of these tabs: ● Overview ● Summary ● Configuration Quantum / *(see Unity Pro, Operating Modes,)* Configuration Quantum Hot Standby PLCs / *(see Modicon Quantum, Hot Standby with Unity, User Manual)* Configuration Quantum Safety PLCs *(see Unity Pro XLS Software, Operating Mode Manual, Safety PLC Specifics)* ● Modbus Port Quantum / *(see Unity Pro, Operating Modes,)* Modbus Port Quantum Hot Standby PLCs / *(see Modicon Quantum, Hot Standby with Unity, User Manual)* Modbus Quantum Safety PLCs *(see Unity Pro, Operating Modes,)* ● Animation Port Quantum / *(see Unity Pro, Operating Modes,)* Animation Port Quantum Hot Standby PLCs / *(see Modicon Quantum, Hot Standby with Unity, User Manual)* Animation Quantum Safety PLCs *(see Unity Pro XLS Software, Operating Mode Manual, Safety PLC Specifics)* ● Hot Standby ● Faults ● I/O Objects

NOTE: %MWi will reset with the cold start %S0 or a loading program. Cold start is typically after a program load, %S0 can be set with the user program to initiate a cold start

140 CPU 651 50 Specifications

General Specifications

Element	Description
Communication ports	1 Modbus (RS-232/RS-485) 1 Modbus Plus (RS-485) 1 USB 1 Ethernet
Bus current required	2160 mA
Max. number of NOM, NOE, PTQ PDP MV1 and MMS modules supported (any combination)	6
Key switch	Yes

Processor

Function	Description
Model	Pentium
Clock speed	166 MHz
Coprocessor	Yes, built-in Ethernet
Watchdog timer	250 ms software adjustable

Memory

RAM	2 MByte
IEC program memory IEC program memory (max. with PCMCIA card)	512 kByte 7168 kBytes

Program Execution Time

Kilo Instruction executed per millisecond (Kins/ms)		Execution time per instruction (ms/Kins)	
100 % Boolean	65 % Boolean + 35 % digital	100 % Boolean	65 % Boolean + 35 % digital
10.28	9.91	0.097	0.101

NOTE: When considering the execution time with the RAM or the PCMCIA card, the values are identical as the program execution takes place within the CACHE memory.

Reference Capacity

Discrete (bits)	64 kByte (any combination)
Registers (words)	64 kByte max.

Local I/O

Max. I/O words	1024 bits/module with no limit on total Local I/O words

Remote I/O

Max. I/O words/drop	64 in / 64 out*
Max. number of remote drops	31
* This information can be a mix of discrete or register I/O. For each word of configured I/O, one of the I/O words must be subtracted from the total available.	

Distributed I/O

Number of networks per system	1 (3**)
Max. words per network	500 in / 500 out For every DIO drop, there is a minimum of two words input of overhead
Max. words per Node	30 in / 32 out
Max. number of DIO Drops per Network	64
** Requires the use of the 140 NOM 21• 00 option module.	

Battery and Clock

Type	3 V lithium
Service Life	1200 mAh
Shelf life	10 years with 0.5% loss of capacity/year
Battery load current @ power-off	typical: 14 µA
	max. 420 µA
TOD clock	+/-8.0 seconds/day @ 0 ... 60 °C

Diagnostics

Power-up	RAM RAM address Executive Checksum User Logic Check Processor
Run Time	RAM RAM address Executive Checksum User Logic Check

140 CPU 651 60 Specifications

General Specifications

Element	Description
Communication ports	1 Modbus (RS-232/RS-485) 1 Modbus Plus (RS-485) 1 USB 1 Ethernet
Bus current required	2760 mA
Max. number of NOM, NOE, PTQ PDP MV1 and MMS modules supported (any combination)	6
Key switch	Yes

Processor

Function	Description
Model	Pentium
Clock speed	266 MHz
Coprocessor	Yes, built-in Ethernet
Watchdog timer	250 ms software adjustable

Memory

RAM	2 MByte
IEC program memory IEC program memory (max. with PCMCIA card)	1024 kByte 7168 kBytes

Program Execution Time

Kilo Instruction executed per millisecond (Kins/ms)		Execution time per instruction (ms/Kins)	
100 % Boolean	65 % Boolean + 35 % digital	100 % Boolean	65 % Boolean + 35 % digital
10.28	10.07	0.097	0.099

NOTE: When considering the execution time with the RAM or the PCMCIA card, the values are identical as the program execution takes place within the CACHE memory.

Reference Capacity

Discrete (bits)	64 kByte (any combination)
Registers (words)	64 kByte max.

Local I/O

Max. I/O words	1024 bits/module with no limit on total LIO words

Remote I/O

Max. I/O words/drop	64 in / 64 out*
Max. number of remote drops	31
* This information can be a mix of discrete or register I/O. For each word of configured I/O, one of the I/O words must be subtracted from the total available.	

Distributed I/O

Number of networks per system	1 (3**)
Max. words per network	500 in / 500 out For every DIO drop, there is a minimum of two words input of overhead
Max. words/node	30 in / 32 out
Max. number of DIO drops/network	64
** Requires the use of the 140 NOM 21• 00 option module.	

Battery and Clock

Type	3 V lithium	
Service life	1200 mAh	
Shelf life	10 years with 0.5% loss of capacity/year	
Battery load current @ power-off	typical: 14 µA	
	max. 420 µA	
TOD clock	+/-8.0 seconds/day @ 0 ... 60 °C	

Diagnostics

Power-up	RAM RAM address Executive Checksum User Logic Check Processor
Run Time	RAM RAM address Executive Checksum User Logic Check

140 CPU 651 60S Specifications

General Specifications

Communication ports	1 Modbus (RS-232/RS-485) 1 Modbus Plus (RS-485) 1 USB 1 Ethernet
Bus current required	2760 mA
Max. number of NOE 771 11 and PTQ PDP MV1 modules supported	6
Key switch	Yes

Processor

Model	Pentium
Clock speed	266 MHz
Coprocessor	Yes, built-in Ethernet
Watchdog timer	250 ms software adjustable

Memory

RAM	2 MByte
IEC program memory IEC program memory (max. with PCMCIA card)	1024 kByte 7168 kBytes

Reference Capacity

Discrete (bits)	64 kByte (any combination)
Registers (words)	64 kByte max.

Local I/O

Max. I/O words	1024 bits/module with no limit on total LIO words

Remote I/O

Max. I/O words/drop	64 in / 64 out*
Max. number of remote drops	31
* This information can be a mix of discrete or register I/O. For each word of configured I/O, one of the I/O words must be subtracted from the total available.	

Battery and Clock

Type	3 V lithium	
Service life	1200 mAh	
Shelf life	10 years with 0.5% loss of capacity/year	
Battery load current @ power-off	typical: 14 µA	
	max. 420 µA	
TOD clock	+/-8.0 seconds/day @ 0 ... 60 °C	

Diagnostics

Power-up & Run Time	RAM RAM address Executive CRC User Logic Check Processors Clock

140 CPU 652 60 Specifications

General Specifications

Element	Description
Communication ports	1 Modbus (RS-232/RS-485) 1 Modbus Plus (RS-485) 1 USB 1 Ethernet
Bus current required	2760 mA
Max. number of NOM, NOE, PTQ PDP MV1 and MMS modules supported (any combination)	6
Key switch	Yes

Processor

Function	Description
Model	Pentium
Clock speed	266 MHz
Coprocessor	Yes, built-in Ethernet
Watchdog timer	250 ms software adjustable

Memory

RAM	4 MByte
IEC program memory IEC program memory (max. with PCMCIA card)	3072 kByte 7168 kBytes

Reference Capacity

Discrete (bits)	64 kByte (any combination)
Registers (words)	64 kByte max.

Local I/O

Max. I/O words	1024 bits/module with no limit on total LIO words

Remote I/O

Max. I/O words/drop	64 in / 64 out*
Max. number of remote drops	31
* This information can be a mix of discrete or register I/O. For each word of configured I/O, one of the I/O words must be subtracted from the total available.	

Distributed I/O

Number of networks per system	1 (3**)
Max. words per network	500 in / 500 out For every DIO drop, there is a minimum of two words input of overhead
Max. words/node	30 in / 32 out
Max. number of DIO drops/network	64
** Requires the use of the 140 NOM 21• 00 option module.	

Battery and Clock

Type	3 V lithium	
Service life	1200 mAh	
Shelf life	10 years with 0.5% loss of capacity/year	
Battery load current @ power-off	typical: 14 µA	
	max. 420 µA	
TOD clock	+/-8.0 seconds/day @ 0 ... 60 °C	

Diagnostics

Power-up	RAM RAM address Executive Checksum User Logic Check Processor
Run Time	RAM RAM address Executive Checksum User Logic Check

140 CPU 671 60 Specifications

Module Specifications

Element	Description
Communication ports	1 Modbus (RS-232/RS-485) 1 Modbus Plus (RS-485) 1 USB 1 Ethernet (used as HSBY port)
Bus current required	2.5 A
Max. number of NOM, NOE, PTQ PDP MV1 and MMS modules supported (any combination)	6
Key switch	Yes
Keypad	Yes

Processor

Function	Description
Model	Pentium
Clock speed	266 MHz
Coprocessor	Yes, Built-in Ethernet
Watchdog timer	250 ms software adjustable

Memory

RAM	2 MByte
IEC program memory (and/or application data and configuration IEC program memory (max. with PCMCIA card)	1024 kByte 7168 kBytes

Program Execution Time

Kilo Instruction executed per millisecond (Kins/ms)		Execution time per instruction (ms/Kins)	
100 % Boolean	65 % Boolean + 35 % digital	100 % Boolean	65 % Boolean + 35 % digital
10.28	10.07	0.097	0.099

NOTE: When considering the execution time with the RAM or the PCMCIA card, the values are identical as the program execution takes place within the CACHE memory.

Reference Capacity

Discrete (bits)	64 k (any combination)
Registers (words)	64 k max.

Remote I/O

Max. I/O words/drop	64 in / 64 out*
Max. number of remote drops	31
* This information can be a mix of discrete or register I/O. For each word of configured I/O, one of the I/O words must be subtracted from the total available.	

Battery and Clock

Battery type	3 V Lithium
Service life	1.2 Ah
Shelf life	10 years with 0.5% loss of capacity/year
Battery load current @ power-off	typical: 14 µA
	max. 420 µA
TOD clock	+/-8.0 s/day @ 0 ... 60 °C

Diagnostic

Power-up	RAM RAM address Executive Checksum User Logic Check Processor
Run Time	RAM RAM address Executive Checksum User Logic Check

140 CPU 671 60S Specifications

Module Specifications

Component	Description
Communication ports	1 Modbus (RS-232/RS-485) 1 Modbus Plus (RS-485) 1 USB 1 Ethernet (used as HSBY port)
Bus current required	2.5 A
Max. number of NOE 771 11 modules supported	6
Key switch	Yes
Keypad	Yes

Processor

Feature	Description
Model	Pentium
Clock speed	266 MHz
Coprocessor	Yes, Built-in Ethernet
Watchdog timer	250 ms software adjustable

Memory

RAM	4 MByte
IEC program memory (and/or application data and configuration) IEC program memory (max. with PCMCIA card)	1024 kByte 7168 kBytes

Reference Capacity

Discrete (bits)	64 k (any combination)
Registers (words)	64 k max.

Remote I/O

Max. I/O words/drop	64 in / 64 out*
Max. number of remote drops	31
* This information can be a mix of discrete or register I/O. For each word of configured I/O, one of the I/O words must be subtracted from the total available.	

Battery and Clock

Battery type	3 V Lithium
Service life	1.2 Ah
Shelf life	10 years with 0.5% loss of capacity/year
Battery load current @ power-off	typical: 14 µA
	max. 420 µA
TOD clock	+/-8.0 s/day @ 0 ... 60 °C

Diagnostic

Power-up	RAM RAM address Executive Checksum User Logic Check Processor
Run Time	RAM RAM address Executive Checksum User Logic Check

140 CPU 672 61 Specifications

Module Specifications

Component	Description
Communication ports	1 Modbus (RS-232/RS-485) 1 Modbus Plus (RS-485) 1 USB 1 Ethernet (used as HSBY port)
Bus current required	2.5 A
Max. number of NOE 771 11 modules supported	6
Key switch	Yes
Keypad	Yes

Processor

Feature	Description
Model	Pentium
Clock speed	266 MHz
Coprocessor	Yes, Built-in Ethernet
Watchdog timer	250 ms software adjustable

Memory

RAM	4 MBytes
IEC program memory (and/or application data and configuration) IEC program memory (max. with PCMCIA card)	3172 kBytes 8 MBytes

Reference Capacity

Discrete (bits)	64 kBytes (any combination)
Registers (words)	64 kBytes max.

Remote I/O

Max. I/O words/drop	64 in / 64 out*
Max. number of remote drops	31
* This information can be a mix of discrete or register I/O. For each word of configured I/O, one of the I/O words must be subtracted from the total available.	

Battery and Clock

Battery type	3 V Lithium
Service life	1.2 Ah
Shelf life	10 years with 0.5% loss of capacity/year
Battery load current @ power-off	typical: 14 µA
	max. 420 µA
TOD clock	+/-8.0 s/day @ 0 ... 60 °C

Diagnostic

Power-up	RAM address Executive Checksum User Logic Check Processor
Run Time	RAM address Executive Checksum

Memory Cards for High End CPU

10

Purpose

This chapter provides information on the memory cards for High End Controller modules.

What's in this Chapter?

This chapter contains the following topics:

Topic	Page
Memory Cards for High End CPUs	182
Installing/Extracting PCMCIA Extension Cards on Advanced Quantum Processors	185
Changing the Batteries of a PCMCIA Memory Card	188
Battery Lifetimes for the PCMCIA Memory Card	192

Memory Cards for High End CPUs

Standard Memory Cards for PLCs

Standard memory cards for PLCs may be classified in two groups:

- saved RAM memory extension cards
- Flash Eprom memory extension cards

Saved RAM Memory Extension Cards

Saved RAM memory extension cards are typically used when generating and debugging an application program. The memory is saved by a removable battery integrated in the memory card.

Flash Eprom Memory Extension Cards

Flash Eprom memory extension cards are typically used after the process of debugging the application program is completed. Such cards allow only the global transfer of the application; their main purpose is to avoid risks often associated with battery back-ups.

References for Standard Memory Extension Cards

The following table indicates the compatibility of the cards with the various processors:

Product Reference	**Type/Capacity**	
	Application	**File**
TSX MFP P 512K	Flash Eprom 512 kb	0
TSX MFP P 001M	Flash Eprom 1024 kb	0
TSX MFP P 002M	Flash Eprom 2048 kb	0
TSX MFP P 004M	Flash Eprom 4096 kb	0

Application + Files Type Memory Extension Cards

In addition to the conventional application storage area (program + constants), these memory cards also maintain a file area used by the program to archive and/or restore data. Here are two sample applications:

- automatic storage of application data and remote consultation via modem
- storage of manufacturing formulas.

There are two types of memory cards:

- Saved RAM memory extension cards: application + files. The memory is saved by a removable battery built into the memory card.
- Flash Eprom memory extension cards: application + files. In this instance, the data storage area is maintained in saved RAM, which implies that this type of card must be equipped with a back-up battery.

Card Reference Numbers

The following table provides the card reference numbers for the applications + file-type memory extension card, and the compatibility of these cards with the processors:

Product reference	Technology	Capacity	
		Application area	File area (RAM type)
TSX MRP C 768K (1)	RAM	768 kb	
		192 to 768 kb	0 to 576 kb
TSX MRP C 001M (1)	RAM	1024 kb	
		192 to 1024 kb	0 to 832 kb
TSX MRP C 001M7 (1)	RAM	1792 kb	
		192 to 1792 kb	0 to 1600 kb
TSX MRP C 002M (1)	RAM	2048 kb	
		192 to 2048 kb	0 to 1856 kb
TSX MRP C 003M (1)	RAM	3072 kb	
		192 to 3072 kb	0 to 2880 kb
TSX MRP C 007M (1)	RAM	7168 kb	
		192 to 7168kb	0 to 6976 kb
TSX MCP C 512K	Flash Eprom	512 kb	512 kb
TSX MCP C 001M	Flash Eprom	1024 kb	512 kb
TSX MCP C 002M	Flash Eprom	2048 kb	1024 kb
TSX MCP C 004M	Flash Eprom	4096 kb	2048 kb
(1) PCMCIA having their applications memory areas and floating capacity and unfrozen files			

File-type Memory Extension Cards without Application

These memory cards contain data. There is no application field (program + constants). These memory extension file storage cards are of the *saved RAM* type. The memory is saved by a removable battery built into the memory card.

Card Reference Numbers

The following table provides reference numbers for memory extension file-type storage cards (without application), and indicates the compatibility of these cards with the various processors:

Product reference	**Technology**	**Capacity**	
		Application area	**File area (RAM type)**
TSX MRP M 004M	RAM	4096 kb	
		0	4096 kb
TSX MRP M 008M	RAM	8192 kb	
		0	8192 kb

Installing/Extracting PCMCIA Extension Cards on Advanced Quantum Processors

Overview

⚠ WARNING

UNINTENDED EQUIPMENT OPERATION

Ensure that the protective cover is closed when the processor is running to maintain enclosure environmental ratings.

Failure to follow these instructions can result in death, serious injury, or equipment damage.

Memory Cards Located in Slot A (Top)

The extraction (or absence) of the cover, or of a data- or file-type memory card and case has no effect on PLC operations. In this case, the read/write functions of the memory card indicate an error if the application is in RUN mode.

The extraction of the application-type memory card and the card case causes the PLC to stop without saving the application context. In this case, the module outputs change to fallback mode. Inserting the case and the memory card containing the application causes a cold start.

⚠ WARNING

UNINTENDED EQUIPMENT OPERATION

Ensure that the right user application is contained in the memory card before inserting it into the PLC. If the application contained in the memory card includes the RUN AUTO option, then the PLC will automatically restart in RUN mode with this application as soon as the inserted memory card content is restored to the PLC.

Failure to follow these instructions can result in death, serious injury, or equipment damage.

Memory Cards Located in Slot B (Bottom)

The PCMCIA memory card and its case can be inserted in slot B of the processor when the PLC is turned on.

Slot B for data and file-type memory cards is not allowed to be used in a Quantum safety CPU, because this data storage is not available for safety projects.

⚠ WARNING

LOSS OF ABILITY TO PERFORM SAFETY FUNCTIONS

Do not use slot B for memory cards with Safety projects in Quantum Safety PLC.

Failure to follow these instructions can result in death, serious injury, or equipment damage.

Installing/Extracting PCMCIA Cards

The following tables provide step-by-step instructions for installing and extracting PCMCIA cards. Installing the memory card on the Quantum advanced CPU module requires a case.

Position of the PCMCIA Card in the Processor

The following table describes the possible slots for the different types of PCMCIA cards in the various PLC processors:

PCMCIA card	Slot A	Slot B
Standard: TSX MRPP and MFPP	Yes	No
Application and files: TSX MRPC and MCPC	Yes	No
Data or Files: TSX MRPF	Yes	Yes

Installing the Card in the Case

The following steps are to be performed regardless of the PCMCIA card type:

Step	Action	Illustration
1	Position the memory card in the case at an oblique angle using the two attachment tabs.	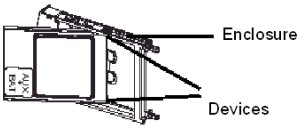
2	Fully insert the memory card in the case. Now the card is solidly attached to the case.	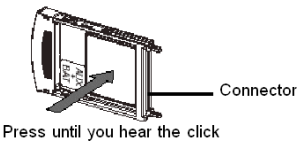

Installing the Card in the PLC

Before installing the card, note that if the program contained in the PCMCIA memory card includes the RUN AUTO option, the processor will automatically restart in RUN mode immediately after the card is inserted. Carry out the following steps to install the memory card into the processor:

Step	Action
1	To remove the protective cover, unlock it and then remove it from the PLC.
2	Place the PCMCIA card/case assembly in the open slot. Fully insert the card/case assembly, then press lightly on the case to connect the card.

Changing the Batteries of a PCMCIA Memory Card

General Points

Memory cards:
- TSX MRP P• standard RAM
- TSX MRP C• RAM for files and application and TSX MCP C• Flash EPROM
- TSX MRP F• data and file-type

have 2 backup batteries, TSX BAT M02 (main) and TSX BAT M03 (auxiliary), which need to be changed periodically.

Two methods are possible:
- one is preventive, based on a periodic change of batteries, without first checking their status,
- the other is predictive, based on the signal sent by a system but, but is only possible for certain memory cards.

Preventive Method

This method is valid for memory cards versions and the PLCs that use those cards. Change both batteries according to the PV of the PCMCIA card, the PLC use, and the lifetime of batteries *(see page 192)*. It does not matter which battery you change first: the application is preserved by the memory card. For the operate mode for changing the batteries: see the service instructions provided with the memory cards.

NOTE:

- Batteries must not be removed from their positions simultaneously. One battery backs up the data and applications while the other is being replaced.
- Install the batteries as shown in the following diagrams, noting the correct polarity (+ and -)
- the memory card must not exceed 24 hours without its main battery in working order,
- to save the auxiliary batteries, you can replace them every 1.5 years. In this case, the maintenance procedure is a bit more complex, because for some memory cards you must remember to change the auxiliary battery only one time out of 3.
- the service lives shown above were calculated for the most unfavorable case: ambient temperature around the PLC at 60° C, and the PLC switched on for 21% of the time in the year (which corresponds to an 8 hour rotation per day with 30 maintenance stoppage days per year).

Predictive Method

This is maintenance based on using bits `%S67` and `%S75` and using the PCMCIA indicator on the Quantum interface. This method assumes that the auxiliary battery is changed preventively every 1.5 years. It is only possible:

- on the PV06 small and medium capacity RAM memory cards (product version written on the card label), i.e. offering memory under Unity ≤768K (TSX MRP P •••K, TSX MCP C •••K, TSX MRP C 448K, TSX MRP C 768K),
- with Unity Pro ≥ 2.02,
- if the memory card is installed in the upper or lower PCMCIA slot on Quantum processors (140 CPU 671 60, 140 CPU 672 61, 140 CPU 651 60, 140 CPU 652 60 and 140 CPU 651 50).

When system bit %S67 (card in the top slot) or %S75 (card in the bottom slot) changes to 1 or the PCMCIA indicator on the processor interface flashes, it means that the main battery is weak. You have 8 days to replace the battery, as shown in the following tables.

NOTE: Before turning on the PLC or removing the memory card, save the project in Unity Pro. If the PLC must be left off or if the memory card must be outside the PLC for more than 8 days, and you have exceeded the service life of the main battery, then back up the application in Unity Pro.

Changing the Batteries

Carry out the following steps:

Step	Action
1	Take the card out of its slot *(see Premium and Atrium using Unity Pro, Processors, racks and power supply modules, Implementation manual)*.
2	Separate the PCMCIA card *(see Premium and Atrium using Unity Pro, Processors, racks and power supply modules, Implementation manual)* from its clip (or caddy).
3	Hold the PCMCIA card so you can access the battery slot. This is at the end of the card without the connector.
4	Replacement of the TSX BAT M02 battery: see table 1. Replacement of the TSX BAT M03 battery: see table 2.
5	Attach the PCMCIA card *(see Premium and Atrium using Unity Pro, Processors, racks and power supply modules, Implementation manual)* to its clip (or caddy).
6	Place the card back in the PLC. *(see Premium and Atrium using Unity Pro, Processors, racks and power supply modules, Implementation manual)*

Procedure for the TSX BAT M02 Battery:

Table 1

Step	Action	Illustration
1	Toggle the changeover lever toward the **TSX BAT M02** (MAIN) battery in order to remove drawer from the main battery.	
2	Remove the used battery from its holder:	
3	Place the new battery in the holder, taking care to respect the polarity.	
4	Insert the holder containing the battery in the card.	

Procedure for the TSX BAT M03 Battery:

Table 2

Step	Action	Illustration
1	Toggle the changeover lever toward the **TSX BAT M03** (AUX) battery in order to remove drawer from the battery.	
2	Remove the used battery from its holder:	
3	Place the new battery in the holder, taking care to respect the polarity.	
4	Insert the holder containing the battery in the card.	

Battery Lifetimes for the PCMCIA Memory Card

Purpose

The purpose of this document is to give detailed information about the lifetime of batteries inside PCMCIA memory cards. The estimation of these lifetimes are based on data from component manufacturers.

Scope

The lifetime information is estimated for:

- RAM PCMCIA memory cards,
- The three different cases of Product Version (PV): PV1/2/3, PV4/5 and PV6,
- Four ambient temperatures for the PLC location: 25° C / 40° C / 50° C / 60° C,
- Four different usage cases of the PCMCIAs: 100%, 92%, 66% and 33% of PLC power-up time. These values are for the following customer configurations:
  - 100%: PLC powered up all year long or during 51 weeks,
  - 92%: PLC powered up all year long except during one month of maintenance,
  - 66%: PLC powered up all year long except during all weekends plus one month of maintenance,
  - 33%: PLC powered up all year long 12 hours a day, except during all weekends plus one month of maintenance.
- A Min (minimum) and a Typical lifetime value:
  - The Min value comes from the most unfavorable characteristics given by the component manufacturers. The actual observed lifetime will be greater than this value.
  - The typical value comes from the typical characteristics of the component.

Main Battery Lifetime of PV1/2/3 PCMCIA (in Years)

The table below presents the lifetime of main battery TSX BAT M01(PV1/2/3) for PCMCIA memory cards:

PV1/2/3	**For a 25° C PLC ambient temperature**							
	100% powered up		**92% PU (30d maint.**		**66% PU (WE. 30d maint.**		**33% PU (12h.WE. 30d maint.**	
	Typical	**Min**	**Typical**	**Min**	**Typical**	**Min**	**Typical**	**Min**
TSX MCP C 224K	7.10	7.10	6.71	5.58	5.77	3.36	4.82	2.20
TSX MCP C 512K	7.10	7.10	6.71	5.65	5.77	3.46	4.82	2.28
TSX MCP C 002M	7.10	7.10	6.29	3.82	4.66	1.57	3.45	0.88
TSX MRP P128K	7.10	7.10	6.71	5.58	5.77	3.36	4.82	2.20
TSX MRP P224K	7.10	7.10	6.71	5.65	5.77	3.46	4.82	2.28
TSX MRP P384K	7.10	7.10	6.71	4.99	5.77	2.60	4.82	1.59

PV1/2/3	For a 25° C PLC ambient temperature							
	100% powered up		92% PU (30d maint.		66% PU (WE. 30d maint.		33% PU (12h.WE. 30d maint.	
	Typical	Min	Typical	Min	Typical	Min	Typical	Min
TSX MRP C448K	7.10	7.10	6.29	4.65	4.66	2.24	3.45	1.33
TSX MRP C768K	7.10	7.10	6.29	4.65	4.66	2.24	3.45	1.33
TSX MRP C001M	7.10	7.10	5.91	3.95	3.91	1.66	2.68	0.94
TSX MRP C01M7	7.10	7.10	5.58	3.43	3.36	1.32	2.20	0.72
TSX MRP C002M	7.10	7.10	5.91	3.34	3.91	1.26	2.68	0.69
TSX MRP C003M	7.10	7.10	5.58	2.60	3.36	0.87	2.20	0.47
TSX MRP C007M	7.10	7.10	4.56	1.59	2.16	0.46	1.27	0.24
TSX MRP F004M	7.10	7.10	5.58	2.60	3.36	0.87	2.20	0.47
TSX MRP F008M	7.10	7.10	4.56	1.59	2.16	0.46	1.27	0.24

PV1/2/3	For a 40° C PLC ambient temperature							
	100% powered up		92% PU (30d maint.		66% PU (WE. 30d maint.		33% PU (12h.WE. 30d maint.	
	Typical	Min	Typical	Min	Typical	Min	Typical	Min
TSX MCP C 224K	3.55	3.55	3.54	3.20	3.54	2.46	3.48	1.87
TSX MCP C 512K	3.55	3.55	3.54	3.22	3.54	2.51	3.48	1.93
TSX MCP C 002M	3.55	3.55	3.42	2.53	3.08	1.34	2.71	0.82
TSX MRP P128K	3.55	3.55	3.54	3.20	3.54	2.46	3.48	1.87
TSX MRP P224K	3.55	3.55	3.54	3.22	3.54	2.51	3.48	1.93
TSX MRP P384K	3.55	3.55	3.54	3.00	3.54	2.02	3.48	1.41
TSX MRP C448K	3.55	3.55	3.42	2.87	3.08	1.80	2.71	1.20
TSX MRP C768K	3.55	3.55	3.42	2.87	3.08	1.80	2.71	1.20
TSX MRP C001M	3.55	3.55	3.30	2.59	2.74	1.40	2.21	0.87
TSX MRP C01M7	3.55	3.55	3.20	2.35	2.46	1.15	1.87	0.69
TSX MRP C002M	3.55	3.55	3.30	2.31	2.74	1.11	2.21	0.65
TSX MRP C003M	3.55	3.55	3.20	1.93	2.46	0.80	1.87	0.45
TSX MRP C007M	3.55	3.55	2.84	1.31	1.75	0.44	1.16	0.24
TSX MRP F004M	3.55	3.55	3.20	1.93	2.46	0.80	1.87	0.45
TSX MRP F008M	3.55	3.55	2.84	1.31	1.75	0.44	1.16	0.24

PV1/2/3	For a 50° C PLC ambient temperature							
	100% powered up		92% PU (30d maint.		66% PU (WE. 30d maint.		33% PU (12h.WE. 30d maint.	
	Typical	Min	Typical	Min	Typical	Min	Typical	Min
TSX MCP C 224K	2.35	2.35	2.42	2.25	2.69	2.02	3.10	1.75
TSX MCP C 512K	2.35	2.35	2.42	2.26	2.69	2.05	3.10	1.81
TSX MCP C 002M	2.35	2.35	2.36	1.90	2.42	1.20	2.47	0.80
TSX MRP P128K	2.35	2.35	2.42	2.25	2.69	2.02	3.10	1.75
TSX MRP P224K	2.35	2.35	2.42	2.26	2.69	2.05	3.10	1.81
TSX MRP P384K	2.35	2.35	2.42	2.15	2.69	1.71	3.10	1.34
TSX MRP C448K	2.35	2.35	2.36	2.09	2.42	1.55	2.47	1.15
TSX MRP C768K	2.35	2.35	2.36	2.09	2.42	1.55	2.47	1.15
TSX MRP C001M	2.35	2.35	2.31	1.93	2.20	1.25	2.05	0.85
TSX MRP C01M7	2.35	2.35	2.25	1.80	2.02	1.04	1.75	0.67
TSX MRP C002M	2.35	2.35	2.31	1.77	2.20	1.01	2.05	0.64
TSX MRP C003M	2.35	2.35	2.25	1.54	2.02	0.75	1.75	0.44
TSX MRP C007M	2.35	2.35	2.07	1.12	1.51	0.42	1.11	0.23
TSX MRP F004M	2.35	2.35	2.25	1.54	2.02	0.75	1.75	0.44
TSX MRP F008M	2.35	2.35	2.07	1.12	1.51	0.42	1.11	0.23

PV1/2/3	For a 60° C PLC ambient temperature							
	100% powered up		92% PU (30d maint.		66% PU (WE. 30d maint.		33% PU (12h.WE. 30d maint.	
	Typical	Min	Typical	Min	Typical	Min	Typical	Min
TSX MCP C 224K	1.57	1.57	1.63	1.56	1.91	1.54	2.40	1.50
TSX MCP C 512K	1.57	1.57	1.63	1.56	1.91	1.56	2.40	1.54
TSX MCP C 002M	1.57	1.57	1.61	1.38	1.77	1.01	2.00	0.74
TSX MRP P128K	1.57	1.57	1.63	1.56	1.91	1.54	2.40	1.50
TSX MRP P224K	1.57	1.57	1.63	1.56	1.91	1.56	2.40	1.54
TSX MRP P384K	1.57	1.57	1.63	1.51	1.91	1.36	2.40	1.19
TSX MRP C448K	1.57	1.57	1.61	1.47	1.77	1.25	2.00	1.04

PV1/2/3	For a 60° C PLC ambient temperature							
	100% powered up		92% PU (30d maint.		66% PU (WE. 30d maint.		33% PU (12h.WE. 30d maint.	
	Typical	Min	Typical	Min	Typical	Min	Typical	Min
TSX MRP C768K	1.57	1.57	1.61	1.47	1.77	1.25	2.00	1.04
TSX MRP C001M	1.57	1.57	1.58	1.40	1.65	1.05	1.72	0.78
TSX MRP C01M7	1.57	1.57	1.56	1.33	1.54	0.90	1.50	0.63
TSX MRP C002M	1.57	1.57	1.58	1.31	1.65	0.87	1.72	0.60
TSX MRP C003M	1.57	1.57	1.56	1.18	1.54	0.67	1.50	0.42
TSX MRP C007M	1.57	1.57	1.47	0.92	1.23	0.40	1.00	0.23
TSX MRP F004M	1.57	1.57	1.56	1.18	1.54	0.67	1.50	0.42
TSX MRP F008M	1.57	1.57	1.47	0.92	1.23	0.40	1.00	0.23

Main Battery Lifetime of PV4/5 PCMCIA (in Years)

The table below presents the lifetime of main battery TSX BAT M02 (PV4/5) for PCMCIA memory cards:

PV4/5	For a 25° C PLC ambient temperature							
	100% powered up		92% PU (30d maint.		66% PU (WE. 30d maint.		33% PU (12h.WE. 30d maint.	
	Typical	Min	Typical	Min	Typical	Min	Typical	Min
TSX MCP C 224K	7.22	7.22	7.15	6.27	7.02	4.48	6.76	3.23
TSX MCP C 512K	7.22	7.22	7.15	6.33	7.02	4.59	6.76	3.35
TSX MCP C 002M	7.22	7.22	6.83	4.69	5.90	2.25	4.96	1.33
TSX MRP P128K	7.22	7.22	7.15	6.27	7.02	4.48	6.76	3.23
TSX MRP P224K	7.22	7.22	7.15	6.33	7.02	4.59	6.76	3.35
TSX MRP P384K	7.22	7.22	7.15	5.77	7.02	3.57	6.76	2.36
TSX MRP C448K	7.22	7.22	6.83	5.47	5.90	3.12	4.96	1.99
TSX MRP C768K	7.22	7.22	6.83	5.47	5.90	3.12	4.96	1.99
TSX MRP C001M	7.22	7.22	6.54	4.82	5.09	2.37	3.91	1.41
TSX MRP C01M7	7.22	7.22	6.27	4.30	4.48	1.91	3.23	1.10
TSX MRP C002M	7.22	7.22	6.54	4.20	5.09	1.83	3.91	1.04
TSX MRP C003M	7.22	7.22	6.27	3.41	4.48	1.29	3.23	0.71
TSX MRP C007M	7.22	7.22	5.39	2.21	3.02	0.70	1.91	0.37
TSX MRP F004M	7.22	7.22	6.27	3.41	4.48	1.29	3.23	0.71
TSX MRP F008M	7.22	7.22	5.39	2.21	3.02	0.70	1.91	0.37

PV4/5	For a 40° C PLC ambient temperature							
	100% powered up		92% PU (30d maint.		66% PU (WE. 30d maint.		33% PU (12h.WE. 30d maint.	
	Typical	Min	Typical	Min	Typical	Min	Typical	Min
TSX MCP C 224K	4.63	4.63	4.72	4.32	5.09	3.61	5.59	2.94
TSX MCP C 512K	4.63	4.63	4.72	4.35	5.09	3.68	5.59	3.04
TSX MCP C 002M	4.63	4.63	4.58	3.51	4.48	2.00	4.30	1.28
TSX MRP P128K	4.63	4.63	4.72	4.32	5.09	3.61	5.59	2.94
TSX MRP P224K	4.63	4.63	4.72	4.35	5.09	3.68	5.59	3.04
TSX MRP P384K	4.63	4.63	4.72	4.08	5.09	2.99	5.59	2.20
TSX MRP C448K	4.63	4.63	4.58	3.93	4.48	2.68	4.30	1.87
TSX MRP C768K	4.63	4.63	4.58	3.93	4.48	2.68	4.30	1.87
TSX MRP C001M	4.63	4.63	4.45	3.58	4.00	2.10	3.49	1.35
TSX MRP C01M7	4.63	4.63	4.32	3.29	3.61	1.73	2.94	1.06
TSX MRP C002M	4.63	4.63	4.45	3.23	4.00	1.66	3.49	1.01
TSX MRP C003M	4.63	4.63	4.32	2.74	3.61	1.21	2.94	0.69
TSX MRP C007M	4.63	4.63	3.89	1.91	2.60	0.67	1.80	0.36
TSX MRP F004M	4.63	4.63	4.32	2.74	3.61	1.21	2.94	0.69
TSX MRP F008M	4.63	4.63	3.89	1.91	2.60	0.67	1.80	0.36

PV4/5	For a 50° C PLC ambient temperature							
	100% powered up		92% PU (30d maint.		66% PU (WE. 30d maint.		33% PU (12h.WE. 30d maint.	
	Typical	Min	Typical	Min	Typical	Min	Typical	Min
TSX MCP C 224K	2.58	2.58	2.69	2.56	3.12	2.50	3.89	2.39
TSX MCP C 512K	2.58	2.58	2.69	2.56	3.12	2.53	3.89	2.45
TSX MCP C 002M	2.58	2.58	2.64	2.25	2.88	1.61	3.22	1.16
TSX MRP P128K	2.58	2.58	2.69	2.56	3.12	2.50	3.89	2.39
TSX MRP P224K	2.58	2.58	2.69	2.56	3.12	2.53	3.89	2.45
TSX MRP P384K	2.58	2.58	2.69	2.47	3.12	2.18	3.89	1.88
TSX MRP C448K	2.58	2.58	2.64	2.41	2.88	2.01	3.22	1.63
TSX MRP C768K	2.58	2.58	2.64	2.41	2.88	2.01	3.22	1.63
TSX MRP C001M	2.58	2.58	2.60	2.28	2.68	1.67	2.74	1.23

PV4/5	For a 50° C PLC ambient temperature							
	100% powered up		92% PU (30d maint.		66% PU (WE. 30d maint.		33% PU (12h.WE. 30d maint.	
	Typical	Min	Typical	Min	Typical	Min	Typical	Min
TSX MRP C01M7	2.58	2.58	2.56	2.15	2.50	1.42	2.39	0.98
TSX MRP C002M	2.58	2.58	2.60	2.13	2.68	1.38	2.74	0.94
TSX MRP C003M	2.58	2.58	2.56	1.90	2.50	1.05	2.39	0.66
TSX MRP C007M	2.58	2.58	2.40	1.46	1.97	0.62	1.58	0.35
TSX MRP F004M	2.58	2.58	2.56	1.90	2.50	1.05	2.39	0.66
TSX MRP F008M	2.58	2.58	2.40	1.46	1.97	0.62	1.58	0.35

PV4/5	For a 60° C PLC ambient temperature							
	100% powered up		92% PU (30d maint.		66% PU (WE. 30d maint.		33% PU (12h.WE. 30d maint.	
	Typical	Min	Typical	Min	Typical	Min	Typical	Min
TSX MCP C 224K	1.75	1.75	1.84	1.78	2.21	1.88	2.95	2.00
TSX MCP C 512K	1.75	1.75	1.84	1.78	2.21	1.90	2.95	2.04
TSX MCP C 002M	1.75	1.75	1.82	1.62	2.09	1.33	2.55	1.06
TSX MRP P128K	1.75	1.75	1.84	1.78	2.21	1.88	2.95	2.00
TSX MRP P224K	1.75	1.75	1.84	1.78	2.21	1.90	2.95	2.04
TSX MRP P384K	1.75	1.75	1.84	1.73	2.21	1.70	2.95	1.63
TSX MRP C448K	1.75	1.75	1.82	1.71	2.09	1.59	2.55	1.44
TSX MRP C768K	1.75	1.75	1.82	1.71	2.09	1.59	2.55	1.44
TSX MRP C001M	1.75	1.75	1.80	1.64	1.98	1.37	2.24	1.11
TSX MRP C01M7	1.75	1.75	1.78	1.57	1.88	1.20	2.00	0.91
TSX MRP C002M	1.75	1.75	1.80	1.56	1.98	1.17	2.24	0.87
TSX MRP C003M	1.75	1.75	1.78	1.44	1.88	0.92	2.00	0.62
TSX MRP C007M	1.75	1.75	1.70	1.17	1.56	0.57	1.40	0.34
TSX MRP F004M	1.75	1.75	1.78	1.44	1.88	0.92	2.00	0.62
TSX MRP F008M	1.75	1.75	1.70	1.17	1.56	0.57	1.40	0.34

Main Battery Lifetime of PV6 PCMCIA (in Years)

The table below presents the lifetime of main battery TSX BAT M02 (PV6) for PCMCIA memory cards:

PV6	For a 25° C PLC ambient temperature							
	100% powered up		92% PU (30d maint.		66% PU (WE. 30d maint.		33% PU (12h.WE. 30d maint.	
	Typical	Min	Typical	Min	Typical	Min	Typical	Min
TSX MCP C 224K	7.2	7.2	7.2	6.3	7.0	4.5	6.8	3.2
TSX MCP C 512K	7.2	7.2	7.2	6.5	7.0	5.1	6.8	3.9
TSX MCP C 002M	7.2	7.2	6.8	5.8	5.9	3.6	5.0	2.4
TSX MRP P128K	7.2	7.2	7.2	6.3	7.0	4.5	6.8	3.2
TSX MRP P224K	7.2	7.2	7.2	6.5	7.0	5.1	6.8	3.9
TSX MRP P384K	7.2	7.2	7.2	6.5	7.0	5.1	6.8	3.9
TSX MRP C448K	7.2	7.2	6.8	5.8	5.9	3.6	5.0	2.4
TSX MRP C768K	7.2	7.2	6.8	5.8	5.9	3.6	5.0	2.4
TSX MRP C001M	7.2	7.2	6.5	5.2	5.1	2.8	3.9	1.7
TSX MRP C01M7	7.2	7.2	6.3	4.7	4.5	2.3	3.2	1.4
TSX MRP C002M	7.2	7.2	6.5	5.2	5.1	2.8	3.9	1.7
TSX MRP C003M	7.2	7.2	6.3	4.7	4.5	2.3	3.2	1.4
TSX MRP C007M	7.2	7.2	5.4	3.5	3.0	1.3	1.9	0.7
TSX MRP F004M	7.2	7.2	6.3	4.7	4.5	2.3	3.2	1.4
TSX MRP F008M	7.2	7.2	5.4	3.5	3.0	1.3	1.9	0.7

PV6	For a 40° C PLC ambient temperature							
	100% powered up		92% PU (30d maint.		66% PU (WE. 30d maint.		33% PU (12h.WE. 30d maint.	
	Typical	Min	Typical	Min	Typical	Min	Typical	Min
TSX MCP C 224K	4.6	4.6	4.7	4.3	5.1	3.6	5.6	2.9
TSX MCP C 512K	4.6	4.6	4.7	4.4	5.1	4.0	5.6	3.5
TSX MCP C 002M	4.6	4.6	4.6	4.1	4.5	3.0	4.3	2.2
TSX MRP P128K	4.6	4.6	4.7	4.3	5.1	3.6	5.6	2.9
TSX MRP P224K	4.6	4.6	4.7	4.4	5.1	4.0	5.6	3.5
TSX MRP P384K	4.6	4.6	4.7	4.4	5.1	4.0	5.6	3.5
TSX MRP C448K	4.6	4.6	4.6	4.1	4.5	3.0	4.3	2.2
TSX MRP C768K	4.6	4.6	4.6	4.1	4.5	3.0	4.3	2.2
TSX MRP C001M	4.6	4.6	4.4	3.8	4.0	2.4	3.5	1.6

PV6	For a 40° C PLC ambient temperature							
	100% powered up		92% PU (30d maint.		66% PU (WE. 30d maint.		33% PU (12h.WE. 30d maint.	
	Typical	Min	Typical	Min	Typical	Min	Typical	Min
TSX MRP C01M7	4.6	4.6	4.3	3.5	3.6	2.0	2.9	1.3
TSX MRP C002M	4.6	4.6	4.4	3.8	4.0	2.4	3.5	1.6
TSX MRP C003M	4.6	4.6	4.3	3.5	3.6	2.0	2.9	1.3
TSX MRP C007M	4.6	4.6	3.9	2.8	2.6	1.2	1.8	0.7
TSX MRP F004M	4.6	4.6	4.3	3.5	3.6	2.0	2.9	1.3
TSX MRP F008M	4.6	4.6	3.9	2.8	2.6	1.2	1.8	0.7

PV6	For a 50° C PLC ambient temperature							
	100% powered up		92% PU (30d maint.		66% PU (WE. 30d maint.		33% PU (12h.WE. 30d maint.	
	Typical	Min	Typical	Min	Typical	Min	Typical	Min
TSX MCP C 224K	2.6	2.6	2.7	2.6	3.1	2.5	3.9	2.4
TSX MCP C 512K	2.6	2.6	2.7	2.6	3.1	2.7	3.9	2.7
TSX MCP C 002M	2.6	2.6	2.6	2.5	2.9	2.2	3.2	1.9
TSX MRP P128K	2.6	2.6	2.7	2.6	3.1	2.5	3.9	2.4
TSX MRP P224K	2.6	2.6	2.7	2.6	3.1	2.7	3.9	2.7
TSX MRP P384K	2.6	2.6	2.7	2.6	3.1	2.7	3.9	2.7
TSX MRP C448K	2.6	2.6	2.6	2.5	2.9	2.2	3.2	1.9
TSX MRP C768K	2.6	2.6	2.6	2.5	2.9	2.2	3.2	1.9
TSX MRP C001M	2.6	2.6	2.6	2.4	2.7	1.9	2.7	1.5
TSX MRP C01M7	2.6	2.6	2.6	2.3	2.5	1.6	2.4	1.2
TSX MRP C002M	2.6	2.6	2.6	2.4	2.7	1.9	2.7	1.5
TSX MRP C003M	2.6	2.6	2.6	2.3	2.5	1.6	2.4	1.2
TSX MRP C007M	2.6	2.6	2.4	1.9	2.0	1.1	1.6	0.7
TSX MRP F004M	2.6	2.6	2.6	2.3	2.5	1.6	2.4	1.2
TSX MRP F008M	2.6	2.6	2.4	1.9	2.0	1.1	1.6	0.7

PV6	For a 60° C PLC ambient temperature							
	100% powered up		92% PU (30d maint.		66% PU (WE. 30d maint.		33% PU (12h.WE. 30d maint.	
	Typical	Min	Typical	Min	Typical	Min	Typical	Min
TSX MCP C 224K	1.8	1.8	1.8	1.8	2.2	1.9	3.0	2.0
TSX MCP C 512K	1.8	1.8	1.8	1.8	2.2	2.0	3.0	2.2
TSX MCP C 002M	1.8	1.8	1.8	1.7	2.1	1.7	2.5	1.6
TSX MRP P128K	1.8	1.8	1.8	1.8	2.2	1.9	3.0	2.0
TSX MRP P224K	1.8	1.8	1.8	1.8	2.2	2.0	3.0	2.2
TSX MRP P384K	1.8	1.8	1.8	1.8	2.2	2.0	3.0	2.2
TSX MRP C448K	1.8	1.8	1.8	1.7	2.1	1.7	2.5	1.6
TSX MRP C768K	1.8	1.8	1.8	1.7	2.1	1.7	2.5	1.6
TSX MRP C001M	1.8	1.8	1.8	1.7	2.0	1.5	2.2	1.3
TSX MRP C01M7	1.8	1.8	1.8	1.6	1.9	1.3	2.0	1.1
TSX MRP C002M	1.8	1.8	1.8	1.7	2.0	1.5	2.2	1.3
TSX MRP C003M	1.8	1.8	1.8	1.6	1.9	1.3	2.0	1.1
TSX MRP C007M	1.8	1.8	1.7	1.4	1.6	0.9	1.4	0.6
TSX MRP F004M	1.8	1.8	1.8	1.6	1.9	1.3	2.0	1.1
TSX MRP F008M	1.8	1.8	1.7	1.4	1.6	0.9	1.4	0.6

Minimum Lifetime of the Main Battery, in a Powered Down PLC

In a powered down PLC, the minimum lifetime of the main battery is 6 months in PV6 PCMCIAs.

Auxiliary Battery Lifetime

The auxiliary battery TSX BATM 03 is included in the PCMCIA product. Whatever the usage cases and ambient temperature, the lifetime of the auxiliary battery is:

- 5 years in PV1/2/3
- 1.7 years in PV4/5
- 5 years in PV6

Power Supply Modules (CPS)

III

Introduction

This part provides information on the Quantum Power Supply modules.

What's in this Part?

This part contains the following chapters:

Chapter	Chapter Name	Page
11	General Information	203
12	140 CPS 111 00: 115 ... 230 VAC Standalone 3 A Power Supply Module	217
13	140 CPS 111 00 (PV 01 or greater): 115 ... 230 VAC Standalone Power Supply Module	221
14	140 CPS 114 00: 115/230 VAC Standalone 8 A Power Supply Module	225
15	140 CPS 114 10: 115/230 VAC Standalone/Summable 8 A Power Supply Module	229
16	140 CPS 114 20: 115/230 VAC Standalone/Summable 11 A Power Supply Module	233
17	140 CPS 124 00: 115/230 VAC Standalone/Redundant 8 A Power Supply Module	237
18	140 CPS 124 20: 115/230 VAC Standalone/Redundant 11 A Power Supply Module	241
19	140 CPS 211 00: 24 VDC Standalone 3 A Power Supply Module	245
20	140 CPS 214 00: 24 VDC Standalone/Summable 7–8 A Power Supply Module	249

Chapter	Chapter Name	Page
21	140 CPS 224 00: 24 VDC Standalone/Redundant 6–9 A Power Supply Module	253
22	140 CPS 414 00: 48 VDC Standalone/Summable 7–8 A Power Supply Module	257
23	140 CPS 424 00: 48 VDC Standalone/Redundant 6–9 A Power Supply Module	261
24	140 CPS 511 00: 125 VDC Standalone 3 A Power Supply Module	265
25	140 CPS 524 00: 125 VDC Standalone/Redundant 8 A Power Supply Module	269

General Information

11

Purpose

This chapter provides general information of the Quantum Power Supplies.

What's in this Chapter?

This chapter contains the following topics:

Topic	Page
Table of Power Supplies	204
System Design Considerations for Quantum Power Supplies	205
Compatibility	210
Presentation	212
Indicators	213
Displaying the Power Supply Budget	214

Table of Power Supplies

Overview

Type	Part Numbers	Source Voltage	Bus Current
Standalone	140 CPS 111 00	115 ... 230 VAC	3 A
	140 CPS 114 00	115/230 VAC	8 A
	140 CPS 211 00	24 VDC	3 A
	140 CPS 511 00	125 VDC	3 A
Standalone/Summable	140 CPS 114 10	115/230 VAC	8 A
	140 CPS 114 20	115/230 VAC	11 A
	140 CPS 214 00	24 VDC	7–8 A
	140 CPS 414 00	48 ... 72 VDC	7–8 A
Standalone/Redundant	140 CPS 124 00	115/230 VAC	8 A
	140 CPS 124 20	115/230 VAC	11 A
	140 CPS 224 00	24 VDC	6–9 A
	140 CPS 424 00	48 ... 72 VDC	6–9 A
	140 CPS 524 00	125 VDC	8 A

⚠ WARNING

UNINTENDED EQUIPMENT OPERATION

Use identical power supplies with the exceptions noted in this chapter.

Failure to follow these instructions can result in death, serious injury, or equipment damage.

System Design Considerations for Quantum Power Supplies

Overview

There exists some important design differences between various models of Quantum power supplies that require careful consideration by the system designer in order to achieve maximum system performance. The principal difference lies in the generation within the power supply of important rack signals related to the health of the power supply and the status of the input power.

Quantum power supplies include on-board early power detection logic which is used to signal other modules on the rack that input power is lost. This signal is called POK (power OK) and is active high (i.e., when the signal is high, power is OK).

There is both an internal (to the power supply) and an external (as seen by the rack and other modules) version of the POK signal. The internal POK signal is represented by the Pwr ok LED (light emitting diode) on the front panel of the power supplies.

The system POK signal is generated so that there is sufficient time between the negative going edge of system POK (power has failed) and the actual interruption of power to the rack. This first notification of power lost is necessary for the Quantum executive to perform an orderly system shutdown.

Standalone Power Supplies

Four models of standalone power supplies are offered:

Power Supply	Range	Bus Current
140 CPS 111 00	115...230 VAC	3 A(60° C)
140 CPS 114 00	115/230 VAC	Operating curve: 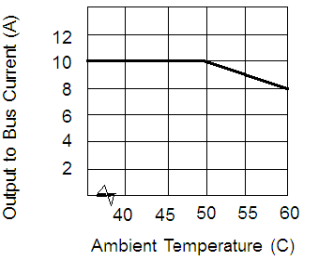
140 CPS 211 00	24 VDC	3 A(60° C)
140 CPS 511 00	125 VDC	3 A(60° C)

⚠ CAUTION

UNINTENDED EQUIPMENT OPERATION

When a rack is equipped with a standalone power supply do not install any other power supply.

When the power supply must be redundant, install redundant power supply units.

Failure to follow these instructions can result in injury or equipment damage.

The following figure shows the direction of the internal POK to the Quantum system POK.

Summable Power Supplies

Four summable power supply models are offered:

Power Supply	Range	Bus Current
140 CPS 114 10	115/230 VAC	8 A (60° C)
140 CPS 114 20	115/230 VAC	11 A (60° C)
140 CPS 214 00	24 VDC	Operating curve: 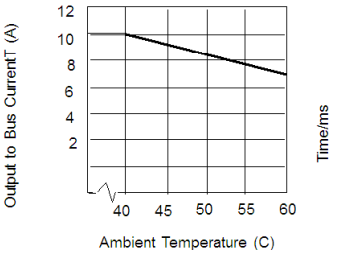

140 CPS 414 00	48 ... 72 VDC	Operating curve: 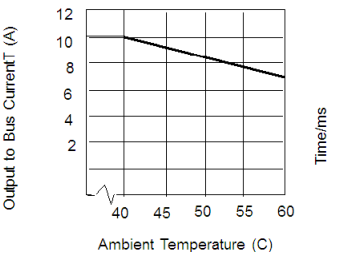

A summable power supply may be used as a standalone power supply without reservation in any Quantum system.

For systems configured with a mix of CPS, NOM, expert, and I/O modules, whose total current consumption from the rack exceeds the current provided by one summable supply, two summable supplies may be used in a single rack. In such a system, the total current available on the rack is the sum of the capability of both supplies (i.e., 2 x 8 A = 16 A). The summable supplies are designed so that they split the current supplied to the load almost equally, which also has the added benefit of increasing total system MTBF, and to distribute the thermal load across the rack. Summable supplies should be installed in the end module positions in the Quantum rack to maximize the system thermal performance.

The Quantum system POK signal in systems powered by two summable power supplies is only true (power is OK) when both internal POK signals (in the 140 CPS •14 •0) are true. Quantum summable power supplies are not hot-swappable.

The following figure shows the direction of the Quantum POK summable power supplies.

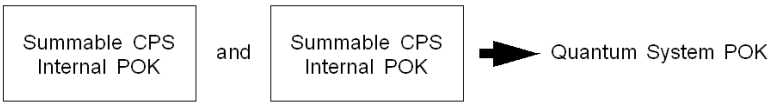

The proper method for starting systems powered by summable power supplies is to insert both supplies in the rack in an unpowered state, and then apply power to each supply. There is no requirement to turn on each supply simultaneously. The system designer must realize that the operation of the summable supply described above is independent of total rack load, i.e., even if the total load on the rack is less than 8 A, if there are two summable supplies installed in the rack, the system POK is generated as shown in this section.

For the special case of a single summable supply used as a standalone, the system POK generation reverts to the standalone case as shown previously in this section.

Redundant Power Supplies

Five redundant power supply models are offered:

Power Supply	Range	Bus Current
140 CPS 124 00	115/230 VAC	8 A (60° C)
140 CPS 124 20	115/230 VAC	11 A (60° C)
140 CPS 224 00	24 VDC	Operating curve: 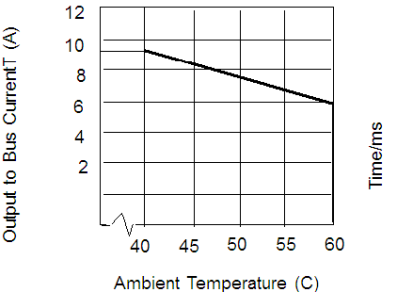
140 CPS 424 00	48 ... 72 VDC	Operating curve: 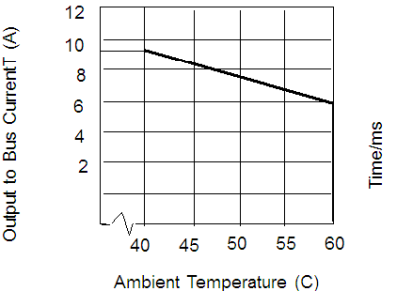
140 CPS 524 00	125 VDC	8 A (60° C)

Similar to the summable supplies, the Quantum redundant power supplies also contain circuitry which forces the installed power supplies to share output current almost equally. An important difference between the summable and the redundant supply lies in the system POK generation circuitry.

The Quantum system POK signal in systems powered by redundant power supplies is true (power is OK) if either or both internal POK is true.

The following figure shows the Quantum system POK redundant power supply direction:

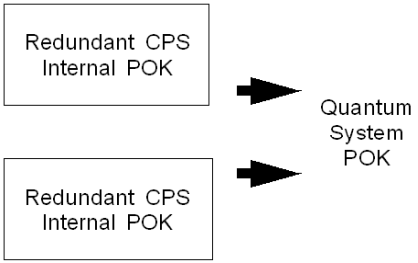

NOTE: Redundant power supply module health may be monitored in an I/O module health status word.

Another important difference from the summable system is the total available system rack loading. If there are N redundant power supplies installed in a rack, the total rack load must not exceed the capability of N-1 supplies. (Nmax=3)

For example, if two 8 A power supplies are installed in the rack (N=2), the maximum rack load available for redundant operation is the current sourced by N-1 (= 1) supplies, which is 8 A. If three 8 A redundant power supplies are installed (N = 3), the maximum rack load available for redundant operation is the current sourced by N-1 (= 2) supplies, which is 16 A.

If these constraints are observed, then in a system of two or three redundant supplies, one supply (it doesn't matter which one) is hot-swappable. This is possible because there is excess capacity in the N-1 remaining supplies to source the rack current while the Nth supply is being swapped.

An obvious extension to this argument is that a single redundant power supply may be used as a standalone supply (but the cheapest solution is obtained by using a summable or standalone supply for this application).

Compatibility

Table of Combination

This table shows the different possible combinations of Quantum power supplies.

				Combination with																	
Power supplies		**Alone**		**1 piece**				**1 piece**					**1 piece**						**2 pieces**				
				140 CPS 111 00	**140 CPS 210 00**	**140 CPS 511 00**		**140 CPS 114 10**	**140 CPS 114 20**	**140 CPS 214 00**	**140 CPS 414 00**		**140 CPS 124 00**	**140 CPS 124 20**	**140 CPS 224 00**	**140 CPS 424 00**	**140 CPS 524 00**		**140 CPS 124 00**	**140 CPS 124 20**	**140 CPS 224 00**	**140 CPS 424 00**	**140 CPS 524 00**
Standalone	**140 CPS 111 00**	X		-	-	-		-	-	-	-		-	-	-	-	-		-	-	-	-	-
	140 CPS 211 00	X		-	-	-		-	-	-	-		-	-	-	-	-		-	-	-	-	-
	140 CPS 511 00	X		-	-	-		-	-	-	-		-	-	-	-	-		-	-	-	-	-
Summable	**140 CPS 114 10**	X		-	-	-		X	X	-	-		-	-	-	-	-		-	-	-	-	-
	140 CPS 114 20	X		-	-	-		X	X	-	-		-	-	-	-	-		-	-	-	-	-
	140 CPS 214 00	X		-	-	-		-	-	X	-		-	-	-	-	-		-	-	-	-	-
	140 CPS 414 00	X		-	-	-		-	-	-	X		-	-	-	-	-		-	-	-	-	-
Redundant	**140 CPS 124 00**	X		-	-	-		-	-	-	-		X	-	-	-	X		X	-	-	-	X
	140 CPS 124 20	X		-	-	-		-	-	-	-		-	X	X	X	-		-	X	X	X	-
	140 CPS 224 00	X		-	-	-		-	-	-	-		-	X	X	-	-		-	X	X	-	-
	140 CPS 424 00	X		-	-	-		-	-	-	-		-	X	-	X	-		-	X	-	X	-
	140 CPS 524 00	X		-	-	-		-	-	-	-		X	-	-	-	X		X	-	-	-	X
Caption:																							
X : possible,																							
- : impossible.																							

⚠ WARNING

UNINTENDED EQUIPMENT OPERATION

Use identical power supplies with the exceptions noted in the above table.

Failure to follow these instructions can result in death, serious injury, or equipment damage.

Compatibility Issues

Power supplies:

- Do not use a standalone power supply in combination with any other supply in the same backplane.
- With the exception of standalone models, power supplies with the same model number are compatible when installed in the same backplane.

DIO:

- While it is possible to use a standalone or a summable power supply with a DIO drop (as long as the DIO input is left unpowered), it is not possible to use a redundant supply with the DIO drop.
- The added power supply need not be of the same type as the DIO adapter. AC powered supplies may be used with DC type adapters and vice-versa.
- DIO module current load with an added power supply is typically 200 mA.

Presentation

Illustration

The following figure shows the power supply module.

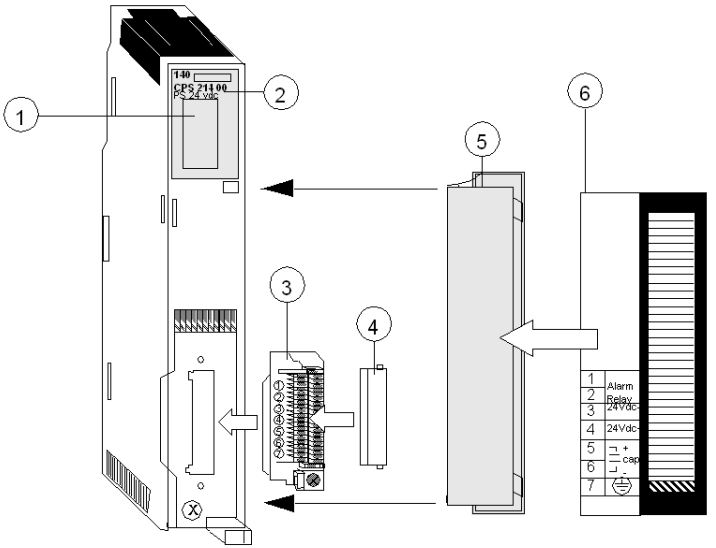

1 LED Area
2 Model Number, Module Description, Color Code
3 Field Wiring Connector
4 Field Wiring Connector Cover
5 Removable door
6 Customer Identification Label, (Fold label and place it inside door)

NOTE: When field wiring the power supply module, the maximum wire size that should be used is 1 - 14 AWG or 2 - 16 AWG; the minimum is 20 AWG.

Indicators

Illustration

The following figure shows the Power Supply LED indicator.

Description

The following table shows the Power Supply LED description.

LEDs	Color	Indication when On
Pwr ok	Green	Power is supplied to the bus.

Displaying the Power Supply Budget

Overview

If one or more power supply modules is configured, the Unity Pro software displays the available load and the consumption of all configured modules. Power supply availability is displayed as a bar graph. Each time you add a module, the green bar increases. An overload condition turns the display red. The first time you overshoot the mark, a warning message is displayed. Nevertheless, you can analyze and generate.

If there is no power supply, the software displays the power consumption requirement in red.

In the case of redundant power supplies, where the full load is applied to each power supply module, the software displays the power supply budget as if there is only one power supply. For summable power supplies, the load is distributed between the power supplies.

Procedure

To access the Power Supply and I/O Budget screen:

Step	Action
1	Open the Bus Editor of Unity Pro.
2	Select the power supply module.
3	Open the context menu with a click on the right mouse button. **Result:** 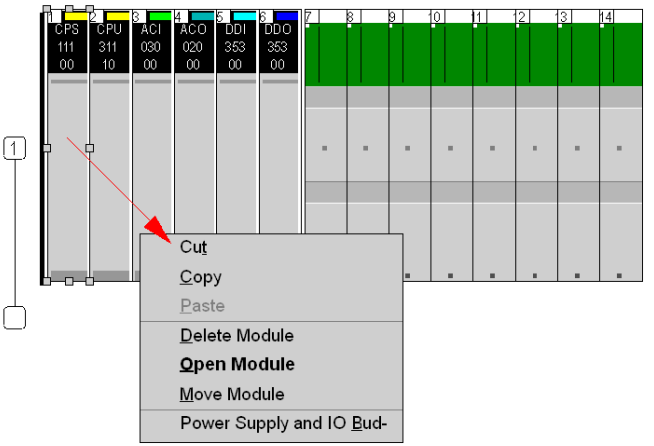
4	Choose **Power Supply and IO Budget**.

Presentation

Here is a sample screen:

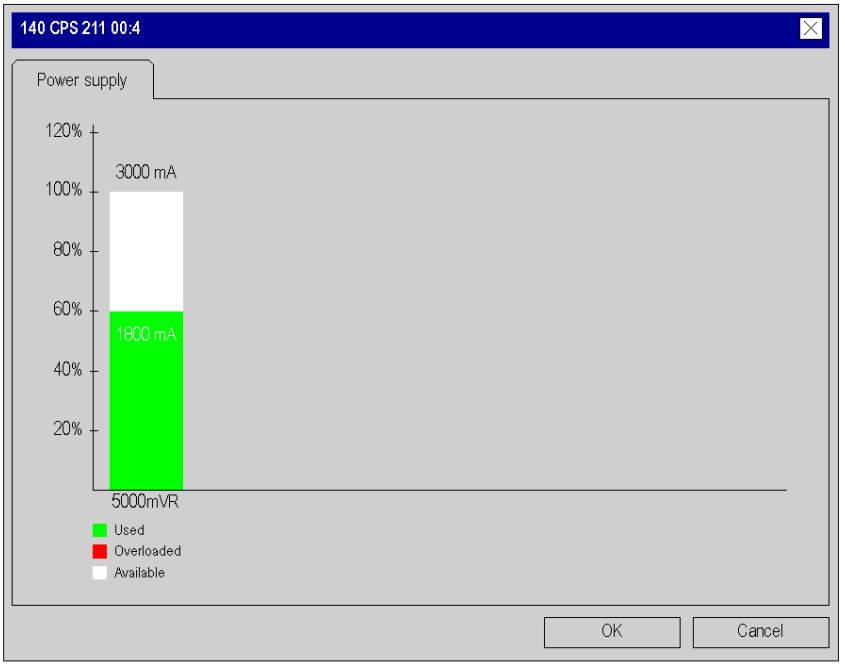

140 CPS 111 00: 115 ... 230 VAC Standalone 3 A Power Supply Module

12

Purpose

This chapter provides information on the 140 CPS 111 00 Power Supply module.

What's in this Chapter?

This chapter contains the following topics:

Topic	Page
140 CPS 111 00 Wiring Diagram	218
140 CPS 111 00 Specifications	219

140 CPS 111 00 Wiring Diagram

Wiring Diagram

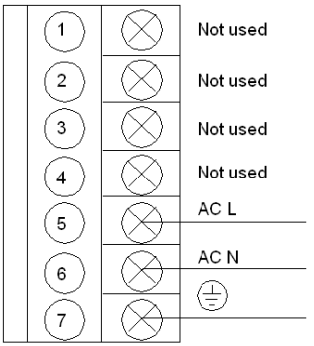

NOTE: For closed system installations, you must use connector 140 XTS 005 00.

⚠ DANGER

ELECTRIC SHOCK

Ensure that the installation complies with wiring, grounding and electromagnetic standards defined in:

- national and local electrical code requirements,
- Grounding and Electromagnetic Compatibility of PLC Systems *(see Grounding and Electromagnetic Compatibility of PLC Systems, Basic Principles and Measures, User Manual)* user manual.

Failure to follow these instructions will result in death or serious injury.

140 CPS 111 00 Specifications

General Specifications

Operating mode	Standalone
Internal power dissipation (electric losses)	6.5 W
Network power consumption	Electric losses + (5.1 x Iout)[1]
Power factor	0.5
[1]: I_{out}: sum of currents consumption by all modules in rack (in A)	

Input

Input voltage	100 ... 276 VAC
Input frequency	47 ... 63 Hz
Input voltage total harmonic distortion	Less than 10% of the fundamental rms value
Input current	0.4 A @ 115 V AC 0.2 A @ 230 V AC
Inrush current	10 A @ 115 V AC 20 A @ 230 V AC
VA rating	50 VA
Fusing (external)	1.5 A slow-blow fuse
Input power interruption	1/2 cycle @ full load and minimum rated line voltage / frequency. No less than 1 s between interruptions.

Output to Bus

Voltage	5.1 VDC
Current	3 A max.
	0.3 A min.
Protection	Overcurrent, overvoltage

140 CPS 111 00 (PV 01 or greater): 115 ... 230 VAC Standalone Power Supply Module

13

Purpose

This chapter provides information on the 140 CPS 111 00 (PV 01 or greater) Power Supply module.

What's in this Chapter?

This chapter contains the following topics:

Topic	Page
140 CPS 111 00 (PV 01 or greater) Wiring Diagram	222
140 CPS 111 00 (PV 01 or greater) Specifications	223

140 CPS 111 00 (PV 01 or greater) Wiring Diagram

Wiring Diagram

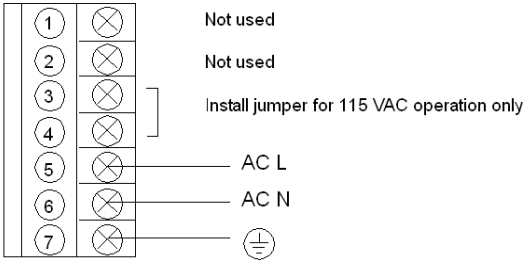

NOTE: For closed system installations, you must use 140 XTS 005 00 connector.

⚠ DANGER

ELECTRIC SHOCK

Ensure that the installation complies with wiring, grounding and electromagnetic standards defined in:

- national and local electrical code requirements,
- Grounding and Electromagnetic Compatibility of PLC Systems *(see Grounding and Electromagnetic Compatibility of PLC Systems, Basic Principles and Measures, User Manual)* user manual.

Failure to follow these instructions will result in death or serious injury.

140 CPS 111 00 (PV 01 or greater) Specifications

General Specifications

Operating mode	Standalone
Internal power dissipation (electric losses)	6.5 W
Network power consumption	Electric losses + (5.1 x I_{out})[1]
Power factor	0.5
[1]: I_{out}: sum of currents consumption by all modules in rack (in A)	

Input

Input voltage	100 ... 276 VAC
Input frequency	47 ... 63 Hz
Input voltage total harmonic distortion	Less than 10% of the fundamental ms value
Input current	0.4 A @ 115 VAC; 0.2 A @ 230 VAC
Inrush current	10 A @ 115 VAC; 20 A @ 230 VAC
VA rating	50 VA
Fusing (external)	1.5 A slow-blow fuse
Input power interruption	1/2 cycle @ full load and minimum rated line voltage / frequency. No less than 1 s between interruptions.

Output to Bus

Voltage	5.1 V dc
Current	3 A max.
	0.3 A min.
Protection	Overcurrent, overvoltage

140 CPS 114 00: 115/230 VAC Standalone 8 A Power Supply Module

14

Purpose

This chapter provides information on the 140 CPS 114 00 Power Supply module.

What's in this Chapter?

This chapter contains the following topics:

Topic	Page
140 CPS 114 00 Wiring Diagram	226
140 CPS 114 00 Specifications	227

140 CPS 114 00 Wiring Diagram

Wiring Diagram

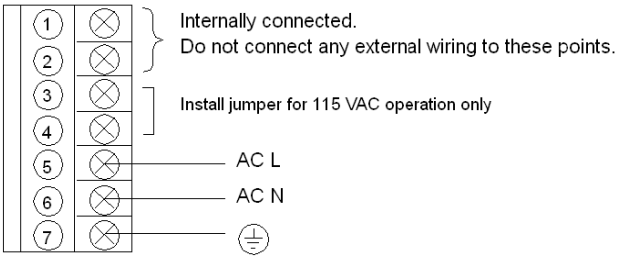

⚠ DANGER

ELECTRIC SHOCK

Ensure that the installation complies with wiring, grounding and electromagnetic standards defined in:

- national and local electrical code requirements,
- Grounding and Electromagnetic Compatibility of PLC Systems *(see Grounding and Electromagnetic Compatibility of PLC Systems, Basic Principles and Measures, User Manual)* user manual.

Failure to follow these instructions will result in death or serious injury.

140 CPS 114 00 Specifications

General Specifications

Operating Mode	Standalone
Internal power dissipation (in Watts)	6.0 + 1.5 x I_{OUT} (where I_{OUT} is in A)

Input

Input voltage	93 ... 138 VAC
	170 ... 276 VAC
Input frequency	47 ... 63 Hz
Input voltage total harmonic distortion	Less than 10% of the fundamental rms value
Input current	1.1 A @ 115 VAC
	0.6 A @ 230 VAC
Inrush current	38 A @ 115 VAC
	19 A @ 230 VAC
VA rating	130 VA
Fusing (external)	2.0 A slow-blow
Input power interruption	1/2 cycle @ full load and minimum rated line voltage / frequency. No less than 1 s between interruptions.

Output to Bus

Voltage	5.1 VDC
Current	8 A @ 60 °C (see the operating curve) min. current not required Operating Curve: 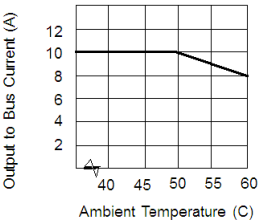
Protection	Over-current, over-voltage

140 CPS 114 10: 115/230 VAC Standalone/Summable 8 A Power Supply Module

15

Purpose

This chapter provides information on the 140 CPS 114 10 Power Supply module.

What's in this Chapter?

This chapter contains the following topics:

Topic	Page
140 CPS 114 10 Wiring Diagram	230
140 CPS 114 10 Specifications	231

140 CPS 114 10 Wiring Diagram

Wiring Diagram

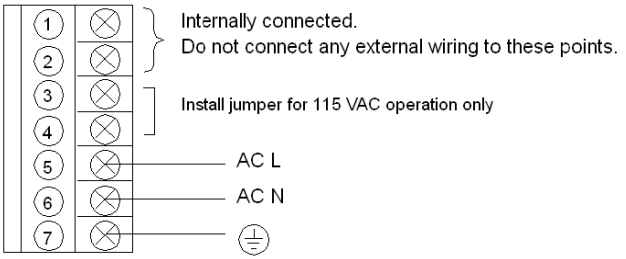

⚠ DANGER

ELECTRIC SHOCK

Ensure that the installation complies with wiring, grounding and electromagnetic standards defined in:

- national and local electrical code requirements,
- Grounding and Electromagnetic Compatibility of PLC Systems *(see Grounding and Electromagnetic Compatibility of PLC Systems, Basic Principles and Measures, User Manual)* user manual.

Failure to follow these instructions will result in death or serious injury.

140 CPS 114 10 Specifications

General Specifications

Operating mode	Standalone
	Summable
Internal power dissipation (in W)	6.0 + 1.5 x I_{OUT} (where I_{OUT} is in A)

Input

Input voltage	93 ... 138 VAC
	170 ... 276 VAC
Input frequency	47 ... 63 Hz
Input voltage total harmonic distortion	Less than 10% of the fundamental rms value
Input current	1.1 A @ 115 VAC 0.6 A @ 230 VAC
Inrush Current	38 A @ 115 VAC. 19 A @ 230 VAC
VA Rating	130 VA
Fusing (external)	2.0 A slow-blow recommended
Input Power Interruption	1/2 cycle @ full load and minimum rated line voltage / frequency. No less than 1 second between interruptions.

Output to Bus

Output to Bus

Voltage	5.1 VDC
Current	8 A @ 60 °C min. Current not required
Protection	Over Current, Over Voltage

140 CPS 114 20: 115/230 VAC Standalone/Summable 11 A Power Supply Module

16

Purpose

This chapter provides information on the 140 CPS 114 20 Power Supply module.

What's in this Chapter?

This chapter contains the following topics:

Topic	Page
140 CPS 114 20 Wiring Diagram	234
140 CPS 114 20 Specifications	235

140 CPS 114 20 Wiring Diagram

Wiring Diagram

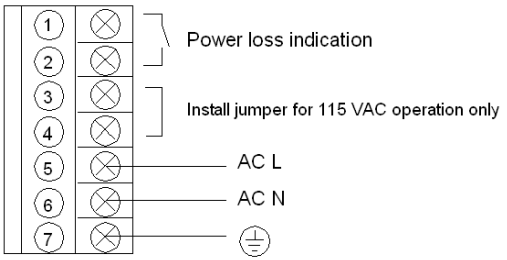

NOTE: A normally closed relay contact rated at 220 VAC, 6A / 30 VDC, 5A is available on terminals 1 and 2 on the power terminal strip. This contact set may be used to signal input power OFF. The relay de-energizes when input power drops below:

- 70 VAC, when input voltage is set to 115VAC.
- 140 VAC, when input voltage is set to 230VAC.

⚠ DANGER

ELECTRIC SHOCK

Ensure that the installation complies with wiring, grounding and electromagnetic standards defined in:

- national and local electrical code requirements,
- Grounding and Electromagnetic Compatibility of PLC Systems *(see Grounding and Electromagnetic Compatibility of PLC Systems, Basic Principles and Measures, User Manual)* user manual.

Failure to follow these instructions will result in death or serious injury.

140 CPS 114 20 Specifications

General Specifications

Operating mode	Standalone
	Summable
Internal power dissipation (electric losses)	11 W
Network power consumption	Electric losses + (5.1 x I_{out})[1]
Power factor	0.5
[1]: I_{out}: sum of currents consumption by all modules in rack (in A)	

140 CPS 114 20 power supplies are designed to not require the external EMI filter, ferrite bead and Olflex cable.

Input

Input voltage	93 ... 138 VAC
	170 ... 264 VAC
Input frequency	47 ... 63 Hz
Input voltage total harmonic distortion	Less than 10% of the fundamental rms value
Input current	1.2 A @ 115 VAC
	0.7 A @ 230 VAC
Inrush current	≤20 A @ 115 VAC
	≤25 A @ 230 VAC
VA rating	160 VA @ 11 A
Fusing (external)	2.0 A slow-blow
Input power interruption	1/2 cycle @ full load and minimum rated line voltage / frequency. No less than 1 s between interruptions.

Output to Bus

Voltage			5.1 VDC
Max. current	Standalone		11 A @ 60 °C
	Summable	a) Two 140 CPS 114 20(total load capacity)	20 A @ 60 °C
		b) One 140 CPS 114 20 and one 140 CPS 114 10	16 A @ 60 °C
Min. current			not required
Protection			Over-current, Over-voltage

140 CPS 124 00: 115/230 VAC Standalone/Redundant 8 A Power Supply Module

17

Purpose

This chapter provides information on the 140 CPS 124 00 Power Supply module.

What's in this Chapter?

This chapter contains the following topics:

Topic	Page
140 CPS 124 00 Wiring Diagram	238
140 CPS 124 00 Specifications	239

140 CPS 124 00 Wiring Diagram

Wiring Diagram

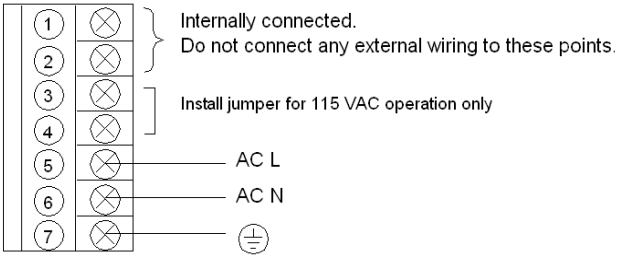

⚠ DANGER

ELECTRIC SHOCK

Ensure that the installation complies with wiring, grounding and electromagnetic standards defined in:

- national and local electrical code requirements,
- Grounding and Electromagnetic Compatibility of PLC Systems *(see Grounding and Electromagnetic Compatibility of PLC Systems, Basic Principles and Measures, User Manual)* user manual.

Failure to follow these instructions will result in death or serious injury.

140 CPS 124 00 Specifications

General Specifications

Operating mode	Standalone
	Redundant
Internal power dissipation (electric losses)	9 W
Network power consumption	Electric losses + (5.1 x I_{out})[1]
Power factor	0.5
[1]: I_{out}: sum of currents consumption by all modules in rack (in A)	

Input

Input voltage	93 ... 138 VAC
	170 ... 276 VAC
Input frequency	47 ... 63 Hz
Input voltage total harmonic distortion	Less than 10% of the fundamental rms value
Input current	1.1 A @ 115 VAC
	0.6 A @ 230 VAC
Inrush current	38 A @ 115 VAC
	19 A @ 230 VAC
VA rating	130 VA
Fusing (external)	2.0 A slow-blow
Input power interruption	1/2 cycle @ full load and minimum rated line voltage / frequency. No less than 1 s between interruptions.

Output to Bus

Voltage			5.1 VDC
Max. Current	Standalone		8 A @ 60° C
	Redudant	a) Two 140 CPS 124 00	8 A @ 60° C
		b) Three 140 CPS 124 00	16 A @ 60° C
		c) One 140 CPS 124 00 and one 140 CPS 524 00	8 A @ 60° C
		d) One 140 CPS 124 00 and two 140 CPS 524 00	16 A @ 60° C
		e) Two 140 CPS 124 00 and one 140 CPS 524 00	16 A @ 60° C
Min Current			Not Required
Protection			Over-current, over-voltage

140 CPS 124 20: 115/230 VAC Standalone/Redundant 11 A Power Supply Module

18

Purpose

This chapter provides information on the 140 CPS 124 20 Power Supply module.

What's in this Chapter?

This chapter contains the following topics:

Topic	Page
140 CPS 124 20 Wiring Diagram	242
140 CPS 124 20 Specifications	243

140 CPS 124 20 Wiring Diagram

Wiring Diagram

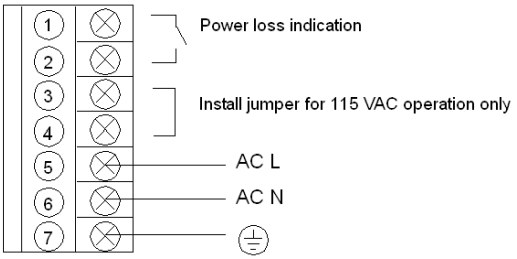

NOTE: A normally closed relay contact rated at 220 VAC, 6A / 30 VDC, 5 A is available on terminals 1 and 2 on the power terminal strip. This contact set may be used to signal input power OFF. The relay de-energizes when input power drops below:

- 70 VAC, when input voltage is set to 115VAC.
- 140 VAC, when input voltage is set to 230VAC.

⚠ DANGER

ELECTRIC SHOCK

Ensure that the installation complies with wiring, grounding and electromagnetic standards defined in:

- national and local electrical code requirements,
- Grounding and Electromagnetic Compatibility of PLC Systems *(see Grounding and Electromagnetic Compatibility of PLC Systems, Basic Principles and Measures, User Manual)* user manual.

Failure to follow these instructions will result in death or serious injury.

140 CPS 124 20 Specifications

General Specifications

Operating mode	Standalone
	Redundant
Internal power dissipation (electric losses)	11 W
Network power consumption	Electric losses + (5.1 x I_{out})[1]
Power factor	0.5
[1]: I_{out}: sum of currents consumption by all modules in rack (in A)	

140 CPS 124 20 power supplies are designed to not require the external EMI filter, ferrite bead and Olflex cable.

Input

Input voltage	93 ... 138 VAC
	170 ... 263 VAC
Input frequency	47 ... 63 Hz
Input voltage total harmonic distortion	Less than 10% of the fundamental rms value
Input current	1.2 A @ 115 VAC
	0.7 A @ 230 VAC
Inrush current	≤20 A @ 115 VAC
	≤25 A @ 230 VAC
VA Rating	160 VA @ 11 A
Fusing (external)	2.0 A slow-blow
Input power interruption	1/2 cycle @ full load and minimum rated line voltage / frequency. No less than 1 s between interruptions.

Output to Bus

Voltage			5.1 VDC
Max. Current	Standalone		11 A @ 60° C
	Redundant	a) Two 140 CPS 124 20	10 A @ 60° C
		b) Three 140 CPS 124 20	20 A @ 60° C
		c) One 140 CPS 124 20 and one 140 CPS x24 00	6 A @ 60° C
			9 A @ 40° C
		d) One 140 CPS 124 20 and two 140 CPS x24 00	12 A @ 60° C
			18 A @ 40° C
		e) Two 140 CPS 124 20 and one 140 CPS x24 00	16 A @ 60° C
			19 A @ 40° C
140 CPS x24 00 means 140 CPS 224 00 or 140 CPS 424 00.			
Min. current			Not required
Protection			Over-current, over-voltage

140 CPS 211 00: 24 VDC Standalone 3 A Power Supply Module

19

Purpose

This chapter provides information on the 140 CPS 211 00 Power Supply module.

What's in this Chapter?

This chapter contains the following topics:

Topic	Page
140 CPS 211 00 Wiring Diagram	246
140 CPS 211 00 Specifications	247

140 CPS 211 00 Wiring Diagram

Wiring Diagram

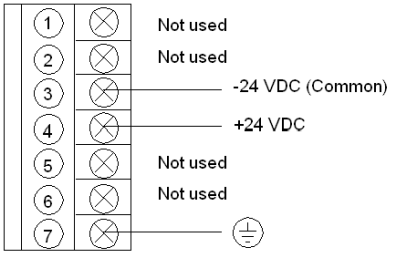

⚠ DANGER

ELECTRIC SHOCK

Ensure that the installation complies with wiring, grounding and electromagnetic standards defined in:

- national and local electrical code requirements,
- Grounding and Electromagnetic Compatibility of PLC Systems *(see Grounding and Electromagnetic Compatibility of PLC Systems, Basic Principles and Measures, User Manual)* user manual.

Failure to follow these instructions will result in death or serious injury.

140 CPS 211 00 Specifications

General Specifications

Operating mode	Standalone
Internal power dissipation (electric losses)	2 + (1.8 x I_{out})
Network power consumption	Electric losses + (5.1 x I_{out})[1]
[1]: I_{out}: sum of currents consumption by all modules in rack (in A)	

Input

Input voltage	20 ... 30 VDC
Input current	1.6 A
Inrush current	30 A
Fusing (external)	2.5 A slow-blow

Output to Bus

Voltage	5.1 VDC
Max. current	3 A
Min. current	0.3 A
Protection	Over-current, over-voltage

140 CPS 214 00: 24 VDC Standalone/Summable 7–8 A Power Supply Module

20

Purpose

This chapter provides information on the 140 CPS 214 00 Power Supply module.

What's in this Chapter?

This chapter contains the following topics:

Topic	Page
140 CPS 214 00 Wiring Diagram	250
140 CPS 214 00 Specifications	251

140 CPS 214 00 Wiring Diagram

Wiring Diagram

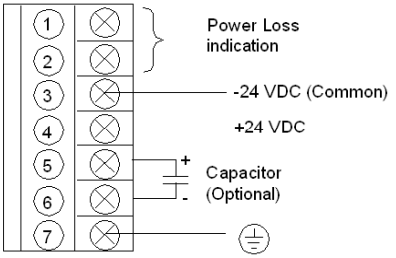

NOTE: 1. A normally closed relay contact rated at 220 VAC, 6 A / 30 VDC, 5 A is available on terminals 1 and 2 on the power terminal strip. This contact set may be used to signal input power OFF. The relay de-energizes when input power drops below 18 VDC.

2. Tolerance to input interruptions may be increased by adding a ≥50 VDC electrolytic capacitor between terminals 5 and 6 on the power terminal strip. Refer to the hold-up capacitor timing chart for capacitor values *Input, page 251*.

⚠ DANGER

ELECTRIC SHOCK

Ensure that the installation complies with wiring, grounding and electromagnetic standards defined in:

- national and local electrical code requirements,
- Grounding and Electromagnetic Compatibility of PLC Systems *(see Grounding and Electromagnetic Compatibility of PLC Systems, Basic Principles and Measures, User Manual)* user manual.

Failure to follow these instructions will result in death or serious injury.

140 CPS 214 00 Specifications

General Specifications

Operating mode	Standalone
	Summable
Internal power dissipation (electric losses)	5 + (1.25 x I_{out})
Network power consumption	Electric losses + (5.1 x I_{out})[1]
[1]: I_{out}: sum of currents consumption by all modules in rack (in A)	

Input

Input voltage	20 ... 30 VDC
Input current	3.8 A
Inrush current	25 A @ 24 VDC
	14 A @ 20 VDC
Input ripple	2.4 VDC peak-to-peak, 94 ... 189 Hz
Input power interruption	1 ms max. @ 24 VDC Hold-up capacitor timing chart 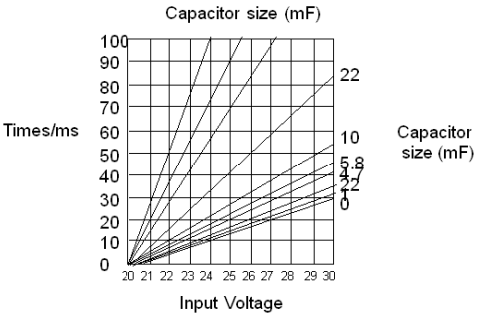
Fusing (external)	5.0 A slow-blow

Output to Bus

Voltage	5.1 VDC
Max. current	Operating curve: 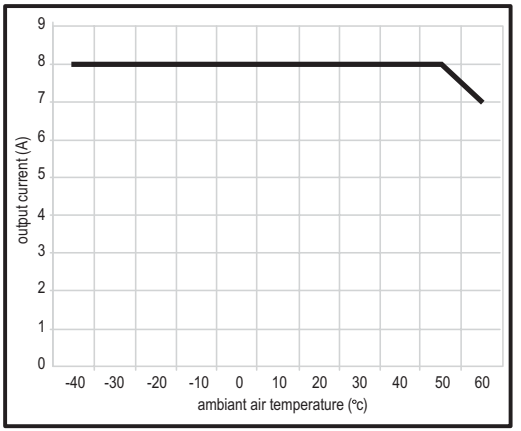
Min. current	not required
Protection	Over-current, over-voltage

140 CPS 224 00: 24 VDC Standalone/Redundant 6–9 A Power Supply Module

21

Purpose

This chapter provides information on the 140 CPS 224 00 Power Supply module.

What's in this Chapter?

This chapter contains the following topics:

Topic	Page
140 CPS 224 00 Wiring Diagram	254
140 CPS 224 00 Specifications	255

140 CPS 224 00 Wiring Diagram

Wiring Diagram Figure

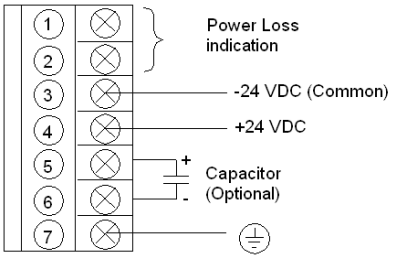

NOTE: 1. A normally closed relay contact rated at 220 VAC, 6 A / 30 VDC, 5 A is available on terminals 1 and 2 on the power terminal strip. This contact set may be used to signal input power OFF. The relay de-energizes when input power drops below 18 VDC.

2. Tolerance to input interruptions may be increased by adding a ≥50 VDC electrolytic capacitor between terminals 5 and 6 on the power terminal strip. Refer to the hold-up capacitor timing chart for capacitor values *Input, page 255*.

⚠ DANGER

ELECTRIC SHOCK

Ensure that the installation complies with wiring, grounding and electromagnetic standards defined in:

- national and local electrical code requirements,
- Grounding and Electromagnetic Compatibility of PLC Systems *(see Grounding and Electromagnetic Compatibility of PLC Systems, Basic Principles and Measures, User Manual)* user manual.

Failure to follow these instructions will result in death or serious injury.

140 CPS 224 00 Specifications

General Specifications

Operating mode	Standalone
	Redundant
Internal power dissipation (in W)	7 + (1.5 x I_{out} [1])
Network power consumption	Electric losses + (5.1 x I_{out})
[1]: I_{out}: sum of currents consumption by all modules in rack (in A)	

Input

Input voltage	20 ... 30 VDC
Input current	3.8 A
Inrush current	25 A @ 24 VDC
	14 A @ 20 VDC
Input ripple	2.4 VDC peak-to-peak, 94 ... 189 Hz
Input Power Interruption	1 ms max. @ 24 VDC Hold-up capacitor timing chart 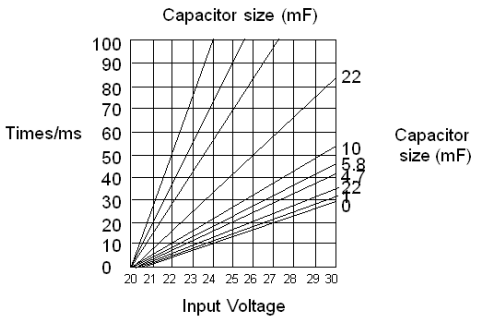
Fusing (external)	5.0 A slow-blow

Output to Bus

Voltage			5.1 VDC
Max. Current	Standalone	Operating curve: 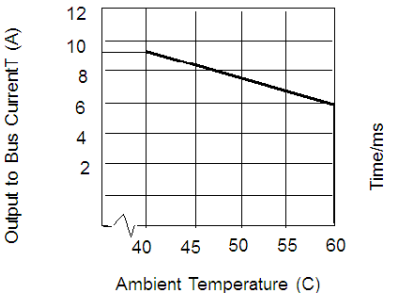	6 A @ 60° C 9 A @ 40° C
	Redundant	a) Two 140 CPS x24 20	6 A @ 60° C
			9 A @ 40° C
		b) Three 140 CPS x24 00	12 A @ 60° C
			18 A @ 40° C
		c) One 140 CPS 224 00 and one 140 CPS x24 00	6 A @ 60° C
			9 A @ 40° C
		d) One 140 CPS 224 00 and two 140 CPS x24 00	12 A @ 60° C
			18 A @ 40° C
		e) Two 140 CPS 224 00 and one 140 CPS x24 00	16 A @ 60° C
			19 A @ 40° C
140 CPS x24 00 means 140 CPS 224 00 or 140 CPS 424 00.			
Protection			Over-current, over-voltage
Surge withland			2.3 x max. rated input voltage for 1.3ms

140 CPS 414 00: 48 VDC Standalone/Summable 7–8 A Power Supply Module

22

Purpose

This chapter provides information on the 140 CPS 414 00 Power Supply module.

What's in this Chapter?

This chapter contains the following topics:

Topic	Page
140 CPS 414 00 Wiring Diagram	258
140 CPS 414 00 Specifications	259

140 CPS 414 00 Wiring Diagram

Wiring Diagram Figure

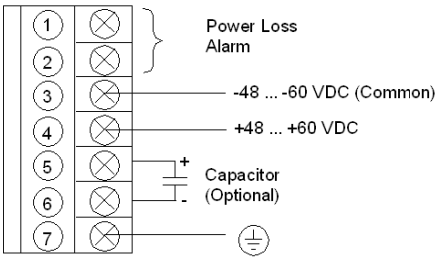

NOTE: 1. A normally closed relay contact rated at 220 VAC, 6 A / 30 VDC, 5 A is available on terminals 1 and 2 on the power terminal strip. This contact set may be used to signal input power OFF or a power supply loss. The relay de-energizes when input power drops below 35 VDC.

2. Tolerance to input interruptions may be increased by adding a ≥80 VDC electrolytic capacitor between terminals 5 and 6 on the power terminal strip. Refer to the hold-up capacitor timing chart for capacitor values in the specification *Input, page 259*.

⚠ DANGER

ELECTRIC SHOCK

Ensure that the installation complies with wiring, grounding and electromagnetic standards defined in:

- national and local electrical code requirements,
- Grounding and Electromagnetic Compatibility of PLC Systems *(see Grounding and Electromagnetic Compatibility of PLC Systems, Basic Principles and Measures, User Manual)* user manual.

Failure to follow these instructions will result in death or serious injury.

140 CPS 414 00 Specifications

General Specifications

Operating mode	Standalone
	Summable
Internal power dissipation (in W)	6 + (1.0 x I_{out})
Network power consumption	Electric losses + (5.1 x I_{out})[1]
[1]: I_{out}: sum of currents consumption by all modules in rack (in A)	

Input

Input voltage	48 ... 72 VDC
Input current	1.2 A @ 48 VDC
Inrush current	25 A @ 40 VDC
Input power interruption	13 ms max. @ 48 VDC Hold-up capacitor timing chart: 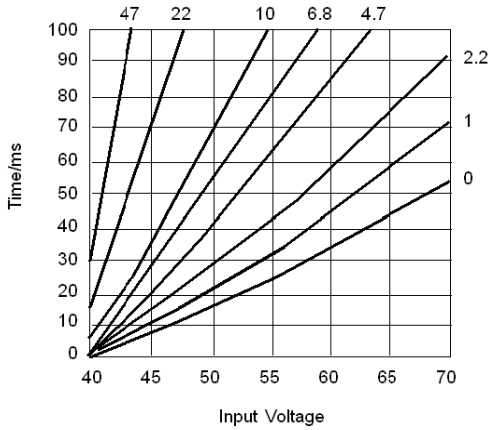
Fusing (external)	2.0 A medium time-lag

Output to Bus

Voltage	5.1 VDC
Max. current	Operating curve: 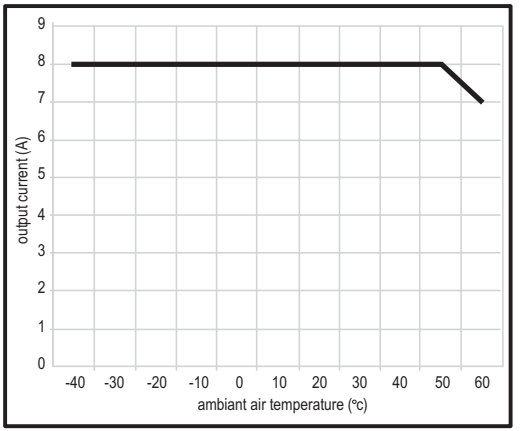
Protection	Over-current, over-voltage

140 CPS 424 00: 48 VDC Standalone/Redundant 6–9 A Power Supply Module

23

Purpose

This chapter provides information on the 140 CPS 424 00 Power Supply module.

What's in this Chapter?

This chapter contains the following topics:

Topic	Page
140 CPS 424 00 Wiring Diagram	262
140 CPS 424 00 Specifications	263

140 CPS 424 00 Wiring Diagram

Wiring Diagram

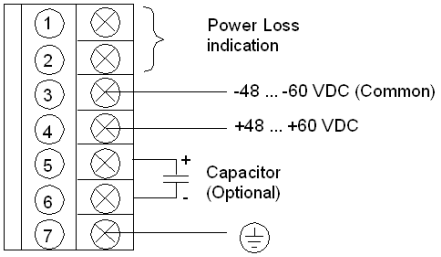

NOTE: 1. A normally closed relay contact rated at 220 VAC, 6 A / 30 VDC, 5 A is available on terminals 1 and 2 of the power terminal strip. This contact set may be used to signal input power OFF or a power supply loss.

2. Tolerance to input interruptions may be increased by adding an 80 VDC electrolytic capacitor between terminals 5 and 6 on the power terminal strip. Refer to the hold-up capacitor timing chart for capacitor values in the specification *Input, page 263*

⚠ DANGER

ELECTRIC SHOCK

Ensure that the installation complies with wiring, grounding and electromagnetic standards defined in:

- national and local electrical code requirements,
- Grounding and Electromagnetic Compatibility of PLC Systems *(see Grounding and Electromagnetic Compatibility of PLC Systems, Basic Principles and Measures, User Manual)* user manual.

Failure to follow these instructions will result in death or serious injury.

140 CPS 424 00 Specifications

General Specifications

Operating mode	Standalone
	Redundant
Internal power dissipation (in W)	7 + (1.5 x I_{out})[1]
Network power consumption	Electric losses + (5.1 x I_{out})
[1]: I_{out}: sum of currents consumption by all modules in rack (in A)	

Input

Input voltage	48 ... 72 VDC
Input current	1.3 A @ 48 VDC
Inrush current	25 A @ 48 VDC
Input power interruption	13 ms max. @ 48 VDC Hold-up capacitor timing chart: 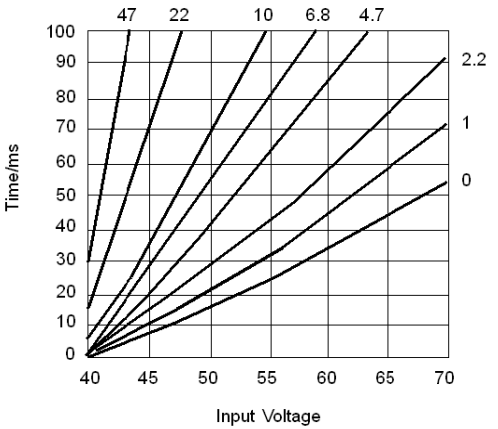
Fusing (external)	2.0 A medium time-lag

Output to Bus

Voltage			5.1 VDC
Max. Current	Standalone	Operating curve: 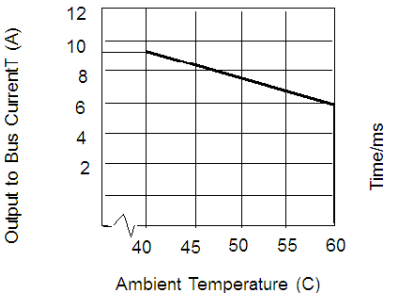	6 A @ 60° C 9 A @ 40° C
	Redundant	a) Two 140 CPS x24 20	6 A @ 60° C
			9 A @ 40° C
		b) Three 140 CPS x24 00	12 A @ 60° C
			18 A @ 40° C
		c) One 140 CPS x24 00 and one 140 CPS x24 00	6 A @ 60° C
			9 A @ 40° C
		d) One 140 CPS 424 00 and two 140 CPS x24 00	12 A @ 60° C
			18 A @ 40° C
		e) Two 140 CPS 424 00 and one 140 CPS x24 00	16 A @ 60° C
			19 A @ 40° C
140 CPS x24 00 means 140 CPS 224 00 or 140 CPS 424 00.			
Protection			Over-current, over-voltage

140 CPS 511 00: 125 VDC Standalone 3 A Power Supply Module

24

Purpose

This chapter provides information on the 140 CPS 511 00 Power Supply module.

What's in this Chapter?

This chapter contains the following topics:

Topic	Page
140 CPS 511 00 Wiring Diagram	266
140 CPS 511 00 Specifications	267

140 CPS 511 00 Wiring Diagram

Wiring Diagram

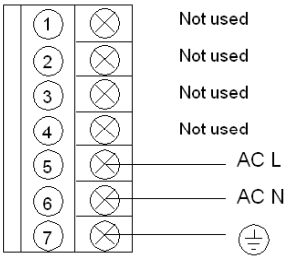

⚠ DANGER

ELECTRIC SHOCK

Ensure that the installation complies with wiring, grounding and electromagnetic standards defined in:

- national and local electrical code requirements,
- Grounding and Electromagnetic Compatibility of PLC Systems *(see Grounding and Electromagnetic Compatibility of PLC Systems, Basic Principles and Measures, User Manual)* user manual.

Failure to follow these instructions will result in death or serious injury.

140 CPS 511 00 Specifications

General Specifications

Operating mode	Standalone
Internal power dissipation (in W)	2 + (1.8 x I_{out})[1]
Network power consumption	Electric losses + (5.1 x I_{out})
[1]: I_{out}: sum of currents consumption by all modules in rack (in A)	

Input

Input voltage	100 ... 150 VDC (including ripple)
Input current	0.4 A
Inrush current	10 A
Input power interruption	1 ms max.
Fusing (external)	1.5 A slow-blow

Output to Bus

Voltage	5.1 VDC
Max. current	3 A
Protection	Over-current, over-voltage

140 CPS 524 00: 125 VDC Standalone/Redundant 8 A Power Supply Module

25

Purpose

This chapter provides information on the 140 CPS 524 00 Power Supply module.

What's in this Chapter?

This chapter contains the following topics:

Topic	Page
140 CPS 524 00 Wiring Diagram	270
140 CPS 524 00 Specifications	271

140 CPS 524 00 Wiring Diagram

Wiring Diagram

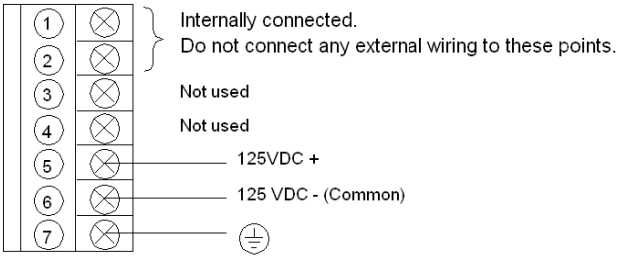

⚠ DANGER

ELECTRIC SHOCK

Ensure that the installation complies with wiring, grounding and electromagnetic standards defined in:

- national and local electrical code requirements,
- Grounding and Electromagnetic Compatibility of PLC Systems *(see Grounding and Electromagnetic Compatibility of PLC Systems, Basic Principles and Measures, User Manual)* user manual.

Failure to follow these instructions will result in death or serious injury.

140 CPS 524 00 Specifications

General Specifications

Operating mode	Standalone
	Redundant
Internal power dissipation (in W)	13 W
Network power consumption	Electric losses + (5.1 x I_{out})[1]
[1]: I_{out}: sum of currents consumption by all modules in rack (in A)	

Input

Input voltage	100 ... 150 VDC (including ripple)
Input current	0.5 A @ 125 VDC
Inrush current	28 A @ 125 VDC
Input power interruption	1 ms max.
Fusing (external)	2 A slow-blow

Output to Bus

Voltage			5.1 VDC
Max. Current	Standalone		8 A @ 60° C
	Redudant	a) Two 140 CPS 524 00	8 A @ 60° C
		b) Three 140 CPS 524 00	16 A @ 60° C
		c) One 140 CPS 124 00 and one 140 CPS 524 00	8 A @ 60° C
		d) One 140 CPS 124 00 and two 140 CPS 524 00	16 A @ 60° C
		e) Two 140 CPS 124 00 and one 140 CPS 524 00	16 A @ 60° C
Min Current			Not Required
Protection			Over-current, over-voltage

Racks(XBP) and Rack Expander (XBE)

IV

Introduction

This part provides information on the Quantum racks and rack expander.

What's in this Part?

This part contains the following chapters:

Chapter	Chapter Name	Page
26	Selecting Racks (XBP)	275
27	140 XBE 100 00: Rack Expander	283

Selecting Racks (XBP)

26

Purpose

This chapter provides information on selecting Quantum Racks.

What's in this Chapter?

This chapter contains the following topics:

Topic	Page
General Information	276
140 XBP 002 00: Two Position Rack	277
140 XBP 003 00: Three Position Rack	278
140 XBP 004 00: Four Position Rack	279
140 XBP 006 00: Six Position Rack	280
140 XBP 010 00: Ten Position Rack	281
140 XBP 016 00: Sixteen Position Rack	282

General Information

Overview

Racks are designed to mechanically fasten and electrically connect modules used in drops. The rack contains a passive circuit board which permits modules to communicate with each other and to identify their slot numbers without further switch settings.

NOTE: To meet vibration/shock specifications, the rack must be mounted using all specified mounting holes. The rack is mounted using standard hardware (described below).

The recommended length for the mounting screws should be within the following range: 0.24 in. (6 mm) - 0.52 in. (13 mm)

The head height of the screws should not exceed 0.14 in. (3.5 mm).

140 XBP 002 00: Two Position Rack

Two Position Rack

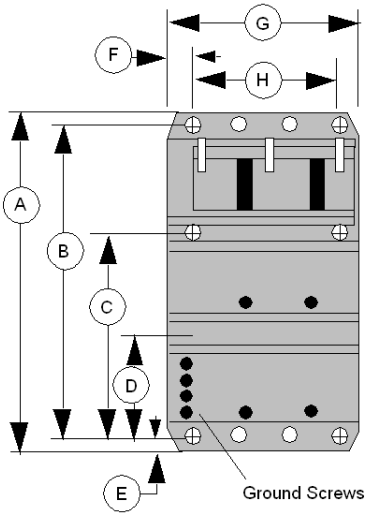

⊕ =Mounting Hole
Diameter: 8 mm (0.31 in)

○ =Optional locations for Modbus Plus communication cable grounding.
Diameter: 8 mm (0.31 in)

● =Threaded mounting holes for half and full height modules.
Diameter: 4 mm (0.16 in)

A 290 mm (11.42 in)
B 270 mm (10.63 in)
C 175.5 mm (6.91 in)
D 94.5 mm (3.72 in)
E 10 mm (0.39 in)
F 15 mm (0.59 in)
G 102.61 mm (4.04 in)
H 72.44 mm (2.85 in)

140 XBP 003 00: Three Position Rack

Three Position Rack

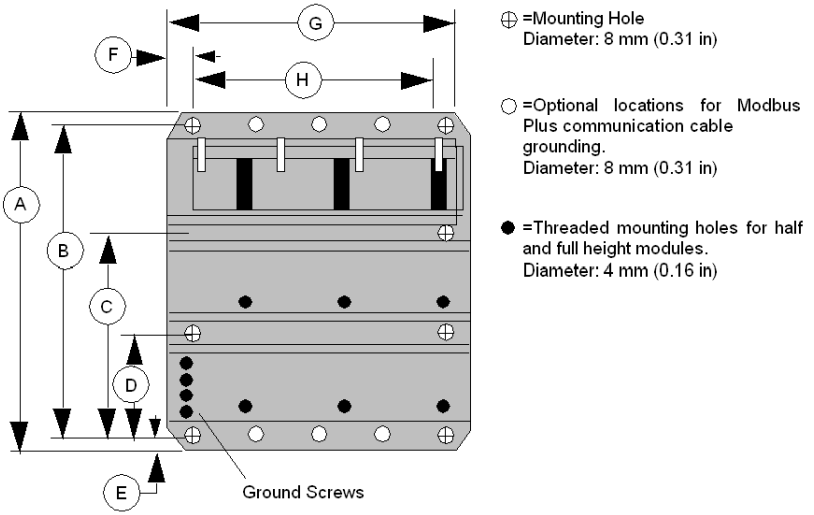

A 290 mm (11.42 in)
B 270 mm (10.63 in)
C 175.5 mm (6.91 in)
D 94.5 mm (3.72 in)
E 10 mm (0.39 in)
F 15 mm (0.59 in)
G 143.13 mm (5.64 in)
H 113.08 mm (4.45 in)

140 XBP 004 00: Four Position Rack

Four Position Rack

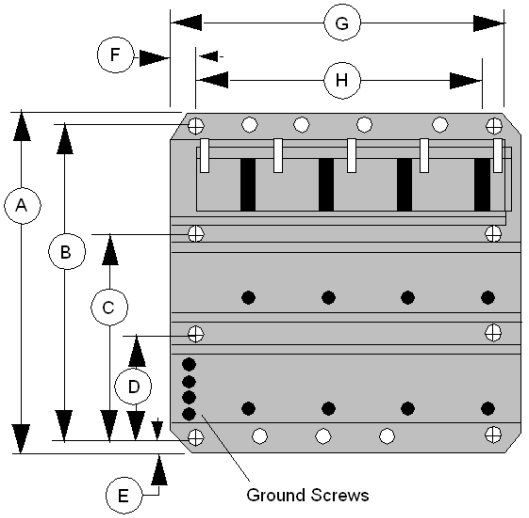

⊕ =Mounting Hole
Diameter: 8 mm (0.31 in)

○ =Optional locations for Modbus Plus communication cable grounding.
Diameter: 8 mm (0.31 in)

● =Threaded mounting holes for half and full height modules.
Diameter: 4 mm (0.16 in)

A 290 mm (11.42 in)
B 270 mm (10.63 in)
C 175.5 mm (6.91 in)
D 94.5 mm (3.72 in)
E 10 mm (0.39 in)
F 15 mm (0.59 in)
G 183.69 mm (7.23 in)
H 153.72 mm (6.05 in)

140 XBP 006 00: Six Position Rack

Six Position Rack

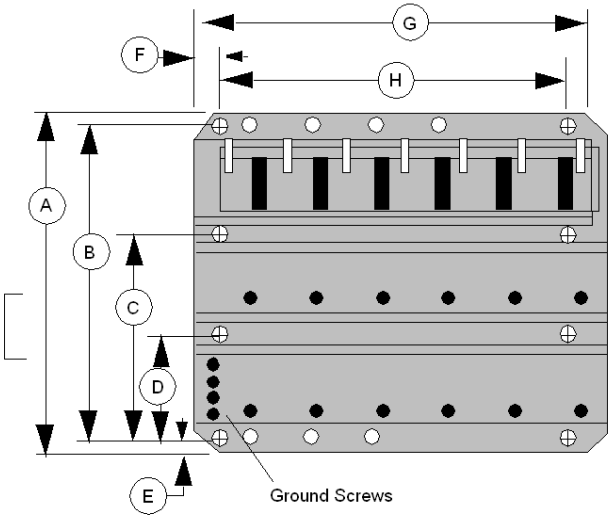

⊕ =Mounting Hole
Diameter: 8 mm (0.31 in)

○ =Optional locations for Modbus Plus communication cable grounding.
Diameter: 8 mm (0.31 in)

● =Threaded mounting holes for half and full height modules.
Diameter: 4 mm (0.16 in)

A 290 mm (11.42 in)
B 270 mm (10.63 in)
C 175.5 mm (6.91 in)
D 94.5 mm (3.72 in)
E 10 mm (0.39 in)
F 15 mm (0.59 in)
G 265.1 mm (10.44 in)
H 235 mm (9.25 in)

140 XBP 010 00: Ten Position Rack

Ten Position Rack

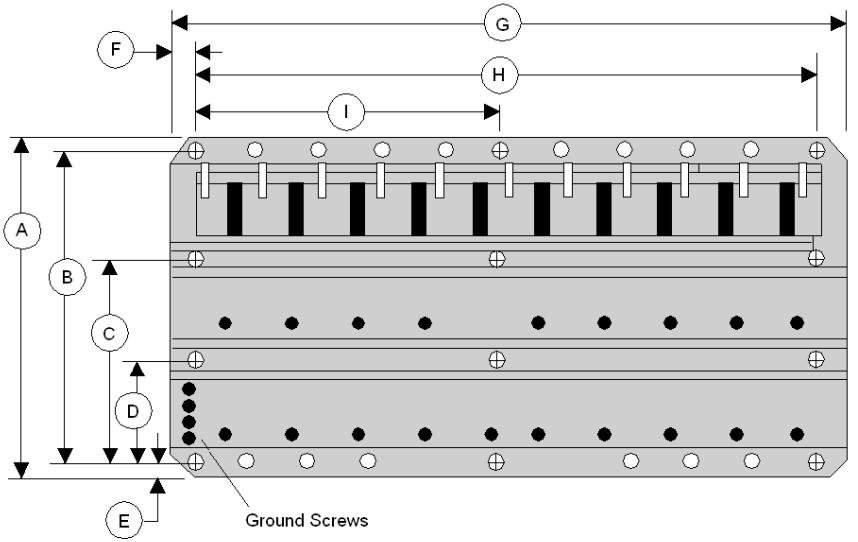

⊕ =Mounting Hole
Diameter: 8 mm (0.31 in)

○ =Optional locations for Modbus Plus communication cable grounding.
Diameter: 8 mm (0.31 in)

● =Threaded mounting holes for half and full height modules.
Diameter: 4 mm (0.16 in)

A 290 mm (11.42 in)
B 270 mm (10.63 in)
C 175.5 mm (6.91 in)
D 94.5 mm (3.72 in)
E 10 mm (0.39 in)
F 15 mm (0.59 in)
G 427.66 mm (16.84 in)
H 397.56 mm (15.65 in)
I 198.78 mm (7.82 in)

140 XBP 016 00: Sixteen Position Rack

Sixteen Position Rack

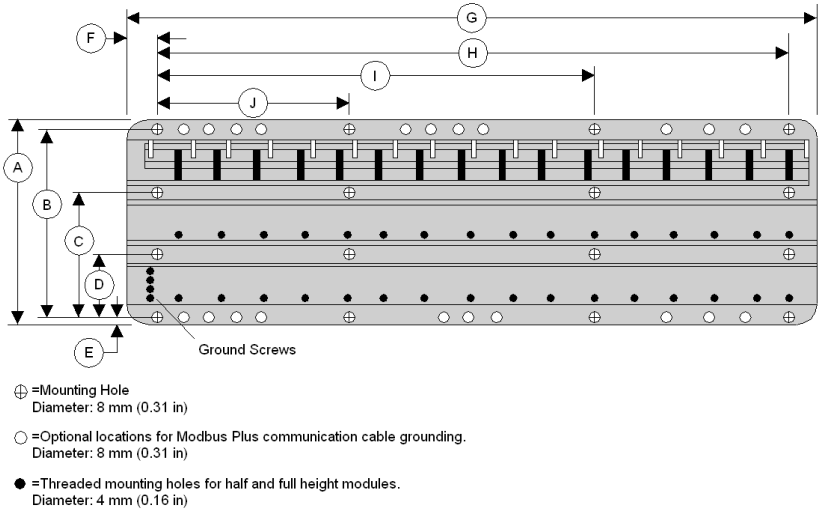

A 290 mm (11.42 in)
B 270 mm (10.63 in)
C 175.5 mm (6.91 in)
D 94.5 mm (3.72 in)
E 10 mm (0.39 in)
F 15 mm (0.59 in)
G 670.74 mm (26.42 in)
H 641.4 mm (25.25 in)
I 427.6 mm (16.83 in)
J 213.8 mm (8.42 in)

140 XBE 100 00: Rack Expander

27

Purpose

This chapter provides information on the 140 XBE 100 00 module.

What's in this Chapter?

This chapter contains the following topics:

Topic	Page
General Information	284
Presentation	286
Operation Guidelines	287
140 XBE 100 00 Specifications	289

General Information

Function

The Rack Expander acts as a repeater for data signals from a primary Quantum rack. Since power is not provided to the secondary rack over the expander cable, power supplies are required in both racks.

The Rack Expander does not have any LEDs to display its status. The active LEDs of the modules in the secondary rack and their associated diagnostic status bits indicate proper operation, including the Rack Expander.

Basic Configuration

The rack containing the CPU or RIO drop adapter is called the Primary rack, and the adjacent rack is designated as the Secondary rack. Each rack requires its own power supply.

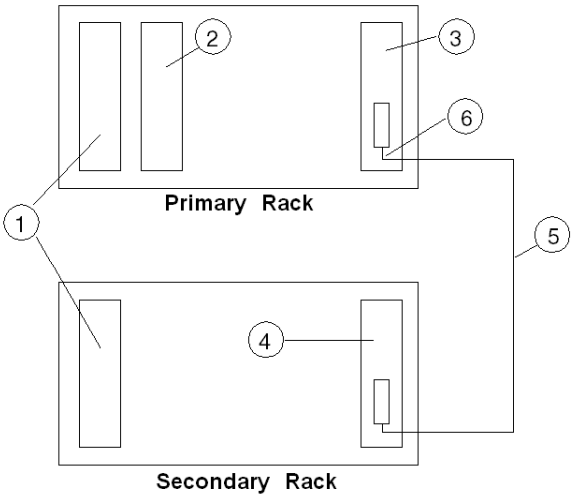

1 Power Supplies
2 CPU or RIO Adapter
3 First Rack Expander (140 XBE 100 00)
4 Second Rack Expander (140 XBE 100 00)
5 Rack Expander Cable (140 XCA 717 0•)
6 Cable end marked as "Primary"

NOTE: Install the cable when the racks are powered OFF.

⚠ CAUTION

UNINTENDED EQUIPMENT OPERATION

- The communication cable is polarized. The cable end marked "Primary" must be connected to the rack that includes the CPU or RIO adapter.
- The communications cable must be connected to the Rack Expander module before it is hot swapped into a powered rack.
- Do not hot swap Rack Expanders modules while modules in secondary rack are operating.

Failure to follow these instructions can result in injury or equipment damage.

Features

- Enhances system performance requiring fewer remote I/O drops for the CPU to service.
- Enables a Quantum CPU to handle up to 27,648 discrete I/O.
- Makes it easy to plan for future I/O expansion by leaving an I/O slot empty for module insertion.
- Cost effective for local I/O by eliminating the need for a remote I/O head and drop.
- Cost effective by eliminating the need for an additional remote I/O drop.

Part Numbers

The following table provides necessary part numbers.

Rack Expander	140 XBE 100 00
Rack Expander (conformally coated)	140 XBE 100 00C
Expander Cable, 3' (1 m)	140 XCA 717 03
Expander Cable, 6' (2 m)	140 XCA 717 06
Expander Cable, 9' (3 m)	140 XCA 717 09

Presentation

Function

With the 140 XBE 100 00 Rack Expander you can add a second rack to a local or remote drop. A custom communications cable, 3.0 m (9.84 ft) maximum, provides the data communication transfer.

Rack Expander

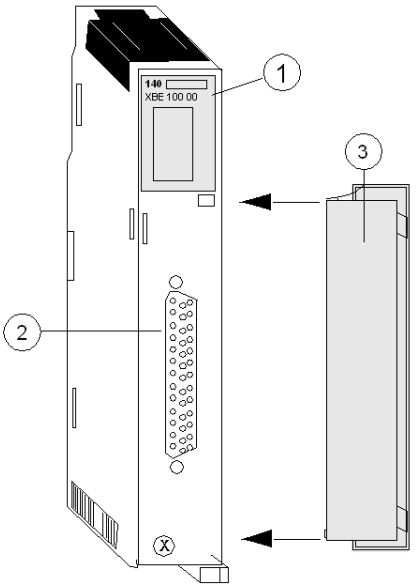

1 Module number, module description and color code
2 Connector
3 Removable door

Operation Guidelines

Rack Expander Guidelines

- The same 140 XBE 100 00 Rack Expander modules are used for the primary and secondary racks. The end of the Rack Expander cable marked "Primary" always connects to the Rack Expander module in the primary rack.
- The system can use any Quantum type power supply. Each rack can have a different type of power supply.
- Loss of power in the secondary rack will not shut down the entire drop. Only modules located in the "Secondary" rack will lose power.
- Rack expander modules can be located in any slot in the rack and do not have to be placed in corresponding slots in the primary and secondary racks.
- I/O modules that have downloadable executive firmware, such as the ESI module, are allowed in the secondary rack—except when downloading their execs. Executive firmware cannot be downloaded to modules in the secondary rack.
- It may be necessary to update the CPU or RIO drop executive firmware. See the Executive Firmware section in Specifications.
- The Rack Expander will not be recognized by the programming panel software. It will look like an unfilled slot in the PLC I/O map.
- The Rack Expander will allow configuration or I/O mapping of additional modules in the local drop containing a CPU or RIO drop adapter—up to the drop word limit or physical slot address limitation.
- Option modules, such as NOMs, NOEs and CHSs must reside in the primary rack.
- Any Interrupt module can be located in the secondary rack, but the interrupt mode is not supported.

If the primary rack power supply goes **OFF**, and the secondary rack power supply remains **ON**, the behavior of the outputs on the secondary rack is not guaranteed. Outputs could either go to the *Off* state or adopt their *Timeout* state as defined by the user.

If the power supply of the secondary rack goes **OFF**, and the primary rack power supply remains **ON**, the **I/O Health bit** of the modules located in this rack could indicate a healthy module.

⚠ CAUTION

UNINTENDED EQUIPMENT OPERATION - UNKNOWN OUTPUT STATE

- The Timeout State must be configured as USER DEFINED with a VALUE of 0 for all modules in the secondary rack regardless of the configuration.
- The same primary power source must be used for the primary and secondary racks.

Failure to follow these instructions can result in injury or equipment damage.

140 XBE 100 00 Specifications

General Specifications

Number of connected racks	2
Maximum distance	3 m
rack requirements	For rack sizes (3-, 4-, 6-, 10- and 16-slot)
Slots used	1
Number of rack expander modules allowed	1/rack
LEDs	None
Required addressing	The rack expander looks like an unfilled slot in the PLC I/O map.
Power consumption	2.5 W
Bus current required	500 mA
Connector	3-pin D-type

Compatibility

Primary rack	No restrictions
Secondary rack	Quantum I/O modules can be used in the secondary rack, unless otherwise noted in the I/O documentation.
Executive firmware	140 CPU •13 0• - Version 2.2
	140 CPU •34 1• - Version 1.03
	140 CPU •34 1•A - Any version
	140 CPU 424 02 - Version 2.15
	140 CPU 6•1 •0 - Any version
	140 CRA 93• 0• - Version 1.2

Max. Words/Drop

Local I/O	64 in / 64 out **Note:**For Unity CPU (for example 140 CPU 65150) there is no limitation of I/O words on local rack.
Remote I/O	64 in / 64 out

Simulator (XSM) and Battery (XCP) Module

V

Introduction

This part provides information on Quantum Simulator (XSM) and Battery (XCP) Module.

What's in this Part?

This part contains the following chapters:

Chapter	Chapter Name	Page
28	Simulator Modules (XSM)	293
29	140 XCP 900 00: Battery Module	299

Simulator Modules (XSM)

28

Purpose

This chapter provides information on Quantum Simulator Modules (XSM).

What's in this Chapter?

This chapter contains the following sections:

Section	Topic	Page
28.1	140 XSM 010 00: Two Channels In / One Channel Out Analog Simulator	294
28.2	140 XSM 002 00: 16 Point Discrete Input Simulator	298

28.1 140 XSM 010 00: Two Channels In / One Channel Out Analog Simulator

Purpose

This section provides information on the 140 XSM 010 00 analog simulator.

What's in this Section?

This section contains the following topics:

Topic	Page
Presentation	295
140 XSM 010 00 Wiring Diagram	296
140 XSM 010 00 Specifications	297

Presentation

Function

The 140 XSM 010 00 module simulates 4 ... 20 mA field current loops. It provides two adjustable 4 ... 20 mA analog signals and one fixed 24 VDC output. The simulator also measures and displays voltages from 0 ... 5 VDC.

The simulator module includes the following:

- An internal 24 VDC power supply
- A 0 ... 5 VDC meter
- Two 10-turn potentiometers

NOTE: The 140 XSM 010 00 is not a field-operational module. It should be used only for testing, simulating and calibrating Quantum current input modules.

Illustration

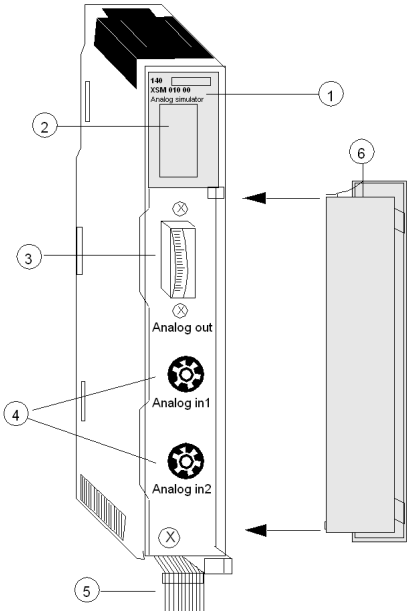

1 Model number, module description, color code
2 LED display
3 Voltmeter
4 Potentiometers
5 Color-coded leads
6 Removable door

NOTE: The 140 XSM 010 00 can be placed in any slot in the Quantum.

140 XSM 010 00 Wiring Diagram

Sample Wiring Diagram

The following diagram shows a typical connection between the simulator, a 140 ACI 030 00 input module and a 140 ACO 020 00 output module. The simulator provides a variable 4 ... 20 mA input to the input module. The input can then be read by a Quantum CPU, and, if required, sent to an output module. For the output module to operate properly, the main current loop must be active, with 24 VDC supplied between terminals 9 and 10 with a 249 Ω voltage drop resistor.

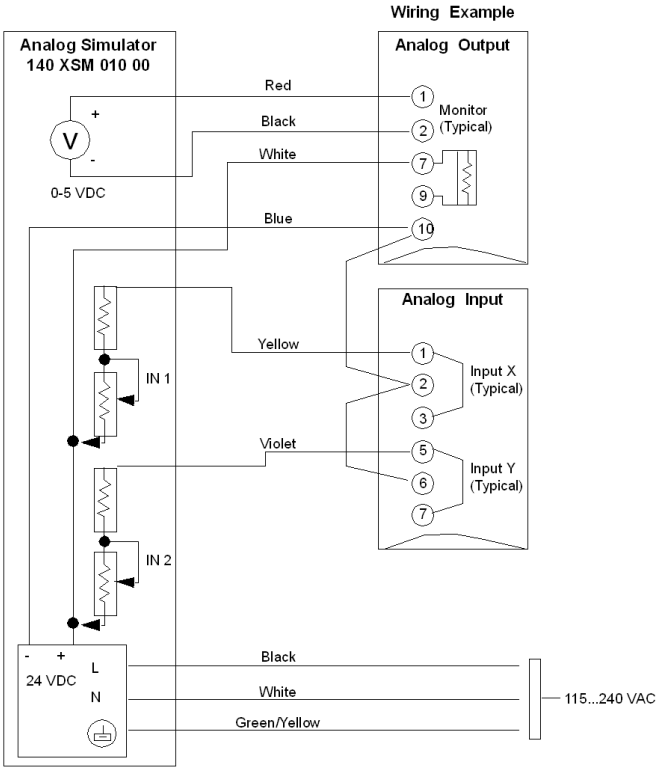

140 XSM 010 00 Generic Wiring Diagram for the 140 A•I 030 00 Input Modules, 140 A•O 020 00 Output Modules, and the 140 AMM 090 00 Input/Output Module

NOTE: For a more detailed description of these modules, refer to the Discrete and Analog I/O Reference Manual Quantum I/O Analog IN Modules *(see Quantum with Unity Pro, Discrete and Analog I/O, Reference Manual)*, Quantum I/O Analog OUT Modules *(see Quantum with Unity Pro, Discrete and Analog I/O, Reference Manual)* and Quantum I/O Analog IN / OUT Modules *(see Quantum with Unity Pro, Discrete and Analog I/O, Reference Manual)*.

140 XSM 010 00 Specifications

Specifications

Voltage	Operating	100 ... 240 VAC, 50/60 Hz
	Continuous output	24 VDC, 400 mA max
Operating current		300 mA @ 120 VAC
Voltmeter range		0 ... 5 VDC
10-turn potentiometer output	variable current	4 ... 20 mA
	variable voltage	1 ... 5 VDC
Internal fusing		None
Bus current required		None

28.2 140 XSM 002 00: 16 Point Discrete Input Simulator

Presentation

Function

The 140 XSM 002 00 simulator consists of 16 toggle switches that can generate up to 16 binary input signals to the 140 DAI 540 00 and the 140 DAI 740 00 AC input modules.

Illustration

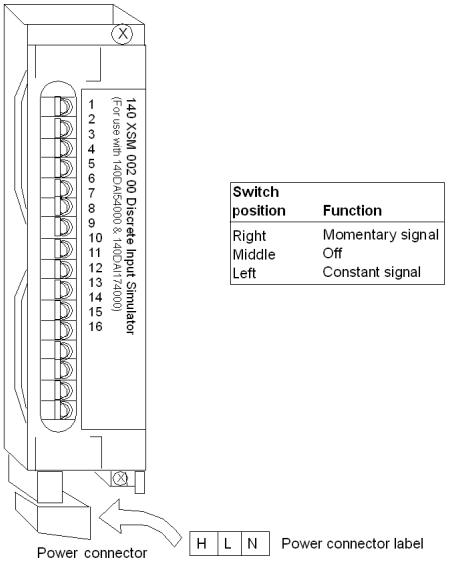

Switch position	Function
Right	Momentary signal
Middle	Off
Left	Constant signal

NOTE: Voltage source range is 24 ... 240 VAC.

⚠ DANGER

HAZARD OF ELECTRIC SHOCK, EXPLOSION, OR ARC FLASH

When using this simulator module with the 140 DAI 540 00 or 140 DAI 740 00 input modules, do not to come in contact with the supplied 115 or 230 VAC located at the bottom of the simulator module.

Failure to follow these instructions will result in death or serious injury.

140 XCP 900 00: Battery Module

29

Purpose

This chapter provides information on Quantum 140 XCP 900 00 Battery module.

What's in this Chapter?

This chapter contains the following topics:

Topic	Page
Presentation	300
140 XCP 900 00 Indicators	301
Installation and Maintenance	302
140 XCP 900 00 Specifications	304

Presentation

Illustration

The following figure shows the battery module components.

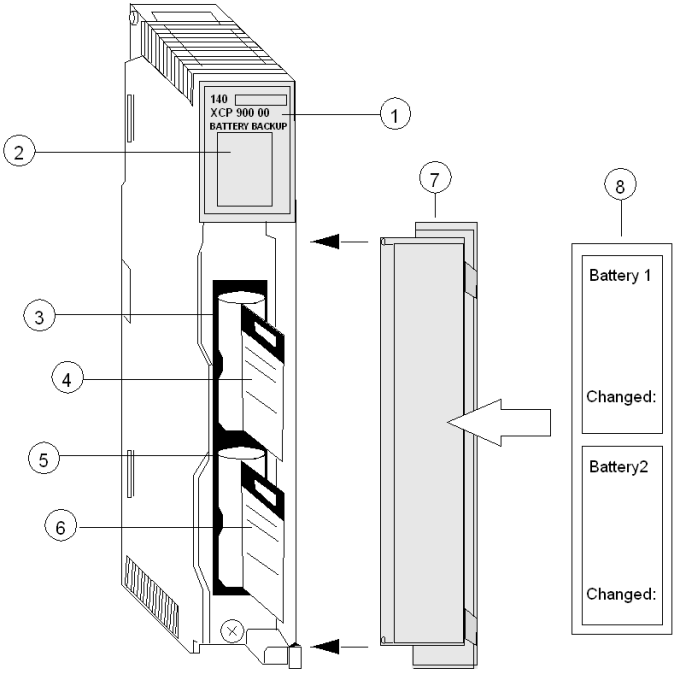

1 Model Number, Module Description, Color Code
2 LED Display
3 Battery Slot 1 (with battery installed)
4 Battery Access Tape (for removal/replacement)
5 Battery Slot 2 (with battery installed)
6 Battery Access Tape (for removal/replacement)
7 Removable Door
8 Customer Identification Label (Fold label and place it inside door)

Battery Backup

The 140 XCP 900 00 provides RAM backup power for expert modules. One non-rechargeable 3.6 V lithium battery is provided and is accessible from the front of the module in Battery Slot 1 (the upper slot) for easy removal when it is necessary to change it.

NOTE: Extended backup is provided when a second battery is installed in Battery Slot 2 (the lower slot).

140 XCP 900 00 Indicators

Illustration

The battery module has three LED indicators.

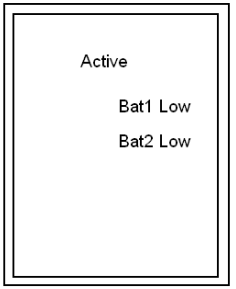

Description

LEDs	Color	Indication when on
Active	Green	Bus communication is present.
Bat1 Low	Red	Battery 1 voltage is low.
Bat2 Low	Red	Battery 2 voltage is low.

NOTE: The Bat1 Low and Bat2 Low LEDs turn on when a battery is:

- not installed
- installed backwards
- or in need of replacement

Installation and Maintenance

Battery Installation and Replacement Considerations

The following procedure describes the installation of a battery.

Step	Action
1	Remove the insulating strip from the plus (+) pole of the battery before inserting it into the module. This strip is used to insulate the battery when on the shelf. **Note:** The battery installed in the module, when shipped, has the insulating strip in place. Remove this strip and re-install the battery before operation.
2	When single battery backup is required, install the battery in Battery Slot 1. The circuitry is designed so Battery 1 supplies the current until it is used up. Battery 2 (when installed) then assumes the load requirement without interruption. Battery status is indicated via LEDs and status bytes.
3	When the controller is in operation, the batteries can be replaced at any time. **Note:** When the controller is powered OFF, battery replacement can be done without RAM loss only when a second functioning battery is installed.

Battery

This diagram shows the battery

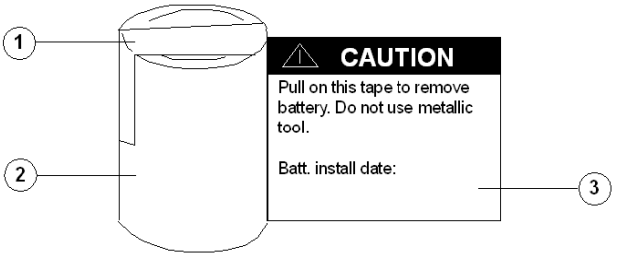

1 Insulating Strip
2 Battery
3 Access strip

Installing/Removing a Battery

The following procedure describes how to install or remove a battery.

Step	Action
1	Remove the insulating strip from the new battery.
2	If necessary, remove the old battery. Detach it from its housing (on the front of the module), by pulling the battery access strip until the battery pops out.
3	Replace it with the new battery using the reverse of the procedure in step 2.

⚠ CAUTION

EQUIPMENT DAMAGE

- Use insulated objects to remove or replace a battery in this module.
- Maintain proper polarity when connecting and inserting new batteries into the 140 XCP 900 00.

Failure to follow these instructions can result in injury or equipment damage.

140 XCP 900 00 Specifications

Specifications

Battery type	C, 3 V lithium
Maximum load current	100 mA
Service life	5.5 Ah
Shelf life	10 years with 0.5% loss of capacity/year
Battery part number	990 XCP 990 00

Service life

To determine the service life of a specific configuration, the current consumption of all available expert modules must be summed, refer to the following table. Place the value as determined in the equation below. The result will be the expected service life in days for a given system configuration.

$$ServiceLife = \frac{5.5Ah}{24h \times totalcurrent(inA)} = \frac{1}{4 \times I}$$

Where I is the total battery current load of all modules in the rack (in A).

The following table shows the modules and their associated current consumption:

Module	**Current Consumption (A)**
ERT 854 00	70
ESI 062 00	150
ESI 062 10	150
MMB 102 00	200
MMB 104 00	200
MMD 102 00	200
MMD 104 00	200

Calculating Service life example

Considering that the XCP 900 00 battery box provides battery backup for the RAM ESI 062 10 and two MMB 102 00 modules.

The service life can be calculated as follow:

$$\frac{5.5Ah}{24h \times (150 \times 10^{-6} + 2 \times 200 \times 10^{-6})A} = 417 days$$

NOTE: If a module is operated from two batteries, the service life is also doubled.

Changing Configuration On The Fly

VI

Contents of this Part

This part describes the Change Configuration On The Fly (CCOTF) function in Quantum systems. This function is referred to as CCOTF in the following chapters.

What's in this Part?

This part contains the following chapters:

Chapter	Chapter Name	Page
30	CCOTF Presentation	309
31	CCOTF Compatibility	311
32	Upgrade Procedure to Use CCOTF Function	317
33	Using CCOTF	325
34	CCOTF Performance	343
35	CCOTF Troubleshooting	345

CCOTF Presentation

30

Overview of the Modicon Quantum CCOTF with Unity System

Purpose

The objective is to allow CCOTF modification when the PLC is in RUN mode, changes can be made to the discrete or analog I/O modules in the local rack or RIO drop as follows:

- add a module in a free slot,
- delete a module,
- modify the adjust and command parameter of a module.

Hardware Requirements

The CCOTF modification is available for all Quantum platforms except for the safety Quantum PLC.

Software Requirements

The minimum Unity software version required to use the CCOTF function is:

- Unity Pro 4.1 XL or XLS for Hot Standby Quantum PLC (140 CPU 67160)
- Unity Pro 5.0 XL for all other Quantum platforms (except safety Quantum PLC)

Firmware Requirements

The minimum firmware versions required to use the CCOTF function are:

- 140 CPU 311 10 firmware: Release SV2.80 or higher
- 140 CPU 434 12A/U firmware: Release SV2.80 or higher
- 140 CPU 534 14A/U firmware: Release SV2.80 or higher
- 140 CPU 534 14B/U firmware: Release SV2.80 or higher
- 140 CPU 651 50 firmware: Release SV2.80 or higher
- 140 CPU 651 60 firmware: Release SV2.80 or higher
- 140 CPU 652 60 firmware: Release SV2.80 or higher
- 140 CPU 671 60 firmware: Release SV2.70 or higher
- 140 CPU 672 61 firmware: Release SV2.80 or higher
- 140 CRA 93x00 firmware: Release SV2.00 or higher
- 140 CRP 93x00 firmware: Release SV2.00 or higher

CCOTF Compatibility

31

Overview

This chapter describes hardware and firmware compatibility for the CCOTF function.

What's in this Chapter?

This chapter contains the following sections:

Section	Topic	Page
31.1	Hardware Compatibility	312
31.2	CCOTF Bus Compatibility	315

31.1 Hardware Compatibility

Purpose

This section describes the Modicon Quantum CCOTF compatibility with Unity

What's in this Section?

This section contains the following topics:

Topic	Page
I/O Modules Compatibility	313
CRA / CRP Management Compatibility	314

I/O Modules Compatibility

Analog and Discrete Modules Compatibility

The table below lists the Quantum I/O modules that can be added / deleted / modified in RUN mode:

Analog Modules	Discrete Modules		
140 ACI 030 00	140 DDI 153 10	140 DAI 543 00	140 DAO 840 10
140 ACI 040 00	140 DDI 353 00	140 DAI 553 00	140 DAO 842 10
140 ACO 020 00	140 DDI 353 10	140 DAI 740 00	140 DAO 842 20
140 ACO 130 00	140 DDI 364 00	140 DAI 753 00	140 DAO 853 00
140 AII 330 00	140 DDI 673 00	140 DSI 353 00	140 DRA 840 00
140 AII 330 10	140 DDI 841 00	140 DDO 153 10	140 DRC 830 00
140 AIO 330 00	140 DDI 853 00	140 DDO 353 00	140 DVO 853 00
140 AMM 090 00	140 DAI 340 00	140 DDO 353 01	140 DDM 390 00
140 ARI 030 10	140 DAI 353 00	140 DDO 353 10	140 DDM 690 00
140 ATI 030 00	140 DAI 440 00	140 DDO 364 00	140 DAM 590 00
140 AVI 030 00	140 DAI 453 00	140 DDO 843 00	140 DII 330 00
140 AVO 020 00	140 DAI 540 00	140 DDO 885 00	140 DIO 330 00
		140 DAO 840 00	

800 Series I/O modules and Sy/Max I/O modules are not compatible with the CCOTF function.

NOTE: Hot Swapping Quantum intrinsically Safe modules (140 AII 330 00, 140 AII 330 10, 140 AIO 330 00, 140 DII 330 00 and 140 DIO 330 00) are not allowed per intrinsic safety standards, however the "Change Config On The Fly" function can be used on these modules for changing their configuration parameters if such modules already exist in the application.

CRA / CRP Management Compatibility

CCOTF Modules Compatibility

The table below lists the CRA / CRP modules that can be compatible with the CCOTF function:

	CRA Module	**CRP Module**
CCOTF compatible	140 CRA 93x 00 PV08 SV2.00	140 CRP 93x 00 PV07 SV2.00
CCOTF compatible after firmware upgrade *(see Modicon Quantum, Hot Standby with Unity, User Manual)*	140 CRA 93x 00 from PV03 SV1.25 to PV06 SV1.26	140 CRP 93x 00 from PV01 SV1.14 to PV06 SV1.15

NOTE: The second category of modules must be upgraded by using the OS Loader tool in order to make them CCOTF compatible *(see Modicon Quantum, Hot Standby with Unity, User Manual)*.

31.2 CCOTF Bus Compatibility

CCOTF Bus Management Compatibility

Type of bus and drop compatibility

The modifications can be done only in the local rack and in Quantum drops which are connected to the RIO bus. It is impossible to do any change on DIO bus. When the **online modification in RUN** is selected in the Unity Pro CPU configuration screen *(see Modicon Quantum, Hot Standby with Unity, User Manual)*, only drops Quantum modules can be connected to the RIO bus. If there are 800 Series I/O and Sy/Max I/O connected to the RIO bus, an error is displayed by the software Unity Pro during the build process.

This table describes the possible bus modifications:

Type of Bus and Drops			**Modification in RUN Authorized**
LOCAL Bus	Local RACK		Yes
	Extended RACK		Yes
RIO Bus	Sy/Max drop		No
	800 Series drop		No
	Quantum drop	Local RACK	Yes
		Extended RACK	Yes
DIO Bus			No

Upgrade Procedure to Use CCOTF Function

32

Subject of this Chapter

This chapter describes the method to upgrade a Modicon Quantum to be CCOTF compatible.

NOTE: This chapter does not apply to Hot Standby systems. For more details concerning the upgrade procedure to use CCOTF function on Hot Standby systems *(see Modicon Quantum, Hot Standby with Unity, User Manual)*

What's in this Chapter?

This chapter contains the following sections:

Section	Topic	Page
32.1	Overview of Upgrade Procedure	318
32.2	Executing the CCOTF Upgrade Procedure	319

32.1 Overview of Upgrade Procedure

General

Stop While Upgrading

It is necessary for the Quantum system to be stopped during the upgrade procedure. The system is stopped for a few seconds if changing the hardware modules and is stopped for several minutes if upgrading the firmware.

32.2 Executing the CCOTF Upgrade Procedure

Purpose

This section describes the procedure to upgrade the Modicon Quantum PLC in order to use the CCOTF function.

The upgrade can be done in two ways:
- Changing the hardware modules with a temporary stop (approximately one minute),
- Upgrading the firmware, that requires a complete stop.

NOTE: To download the CPU, Copro, CRA and CRP firmwares, please access to Schneider electric web site www.schneider-electric.com.

⚠ WARNING

SYSTEM NO LONGER ACTIVE

Before stopping the system, always positively confirm that there is no critical operation in progress.

The system is no longer active.

Failure to follow these instructions can result in death, serious injury, or equipment damage.

What's in this Section?

This section contains the following topics:

Topic	Page
General	320
Changing the Hardware Modules	321
Upgrading the Firmware	324

General

Upgrade CCOTF

The picture below shows the example of a Quantum configuration that will be upgraded to be CCOTF compatible:

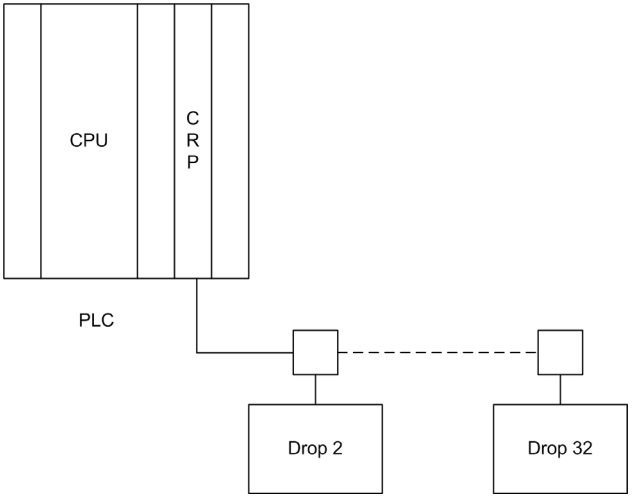

In order to make a Quantum configuration CCOTF compatible, there are several steps to follow:

- Upgrade the CPU and CRP,
- Upgrade the CPU application in the PLC,
- Upgrade all the CRA connected to the RIO bus,

The CPU and CRA / CRP modules can be upgraded in two ways:

- By changing the hardware modules to use CCOTF compatible modules,
- By upgrading the CPU, Copro and CRA / CRP modules firmware.

Changing the Hardware Modules

Changing PLC Procedure

The objective of the procedure below is to describe how to upgrade the modules in the PLC:

1. Make sure that the application program running on the Quantum CPU has been exported in the XEF format and is available on the computer.
   If not, upload the application program from the PLC to Unity Pro, and export it in the XEF format.
2. If not yet installed, install Unity Pro 5.0 XL (or higher software version),

⚠ WARNING

LOSS OF COMMUNICATION

Before changing the state of PLC to STOP, always positively confirm that there is no critical operation in progress. The system is no longer active.

Failure to follow these instructions can result in death, serious injury, or equipment damage.

3. Stop the PLC and power it off.
4. When using a PCMCIA, remove the PCMCIA card,
5. When using a PCMCIA, remove the batteries of the memory card to empty the card,
6. Disconnect the RIO cables from CRP.
7. Replace CPU and CRP with compatible versions V2.80 (or higher firmware version) and V2.00.
8. Power on PLC.
9. When using a PCMCIA, insert the batteries in the PCMCIA card and then insert the PCMCIA card in CPU.

NOTE: The CPU must be in a **No Conf** state.

10. Import the XEF file of the application in Unity 5.0.
11. In the Local Bus editor replace the current version of the CPU. For more details refer to Firmware Requirement *(see page 309)*.
12. Click on the **online modification in Run** check box in the CPU configuration screen to enable the new function.
    The picture below shows the check box added in the configuration tab:

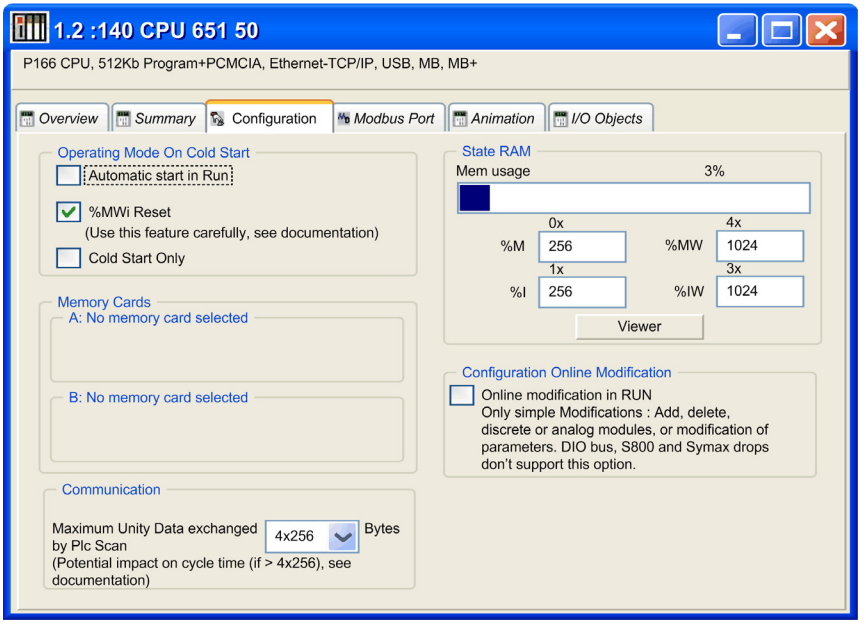

13. Rebuild the application using **Rebuild all** and download it onto CPU. The CPU is in STOP mode.
14. Reconnect the RIO cable from CRP.

⚠ WARNING

LOSS OF DATA

At the end of the application download, all the application data in the PLC have their initial values. Before changing the state of the PLC to RUN, always confirm that the application can restart with initial values.

Failure to follow these instructions can result in death, serious injury, or equipment damage.

15. Connect Unity Pro to PLC and put the PLC in RUN mode.

Changing the CRA Modules in the Quantum RIO Drops

Changing CRA modules in the RIO drops must only be done after the local rack of the PLC have been updated with new CPU and CRP modules:

1. Make sure that a powered off RIO drop is supported by the application.
2. Power off the RIO drop to update.
3. Disconnect the RIO cable from the CRA module, then remove the CRA module from the drop
4. Insert the new CRA module.
5. Reconnect the RIO cable on the CRA module.
6. Power on the RIO drop.
7. Repeat steps 2 through 6 for all RIO drops.

NOTE: All RIO drops configured in the RIO bus must be CCOTF compatible. This means that the corresponding bit in the system word %SW98 and %SW99 must be set to 1. If not, no CCOTF modification is allowed.

NOTE: 800 Series I/O and Sy/Max I/O are not CCOTF compatible. When the CCOTF function is configured, neither 800 Series I/O nor Sy/Max I/O must be connected to the RIO bus.

Upgrading the Firmware

CPU Firmware Upgrade

The CPU firmware download can be done through Modbus or Modbus Plus by using the Unity Pro OS Loader tool.

The following procedure describes the main steps to perform a CPU upgrade:

1. Open the OS Loader tool,
2. Select the Modbus or Modbus Plus communication option,
3. Connect to the CPU using Modbus or Modbus Plus,
4. Open the binary file:
   Example: 140CPU65160_Vxxx.bin, xxx equal or higher to 280,
5. Download the binary file to the CPU.

CRP Firmware Upgrade

The CRP firmware download can be done by using Unity Pro OS Loader tool.

The following procedure describes the main steps to perform a CRP upgrade:

1. Open the OS Loader tool,
2. Select the Modbus or Modbus Plus communication option,
3. Select the Local Head and indicate the **Slot Number**,
4. Select the **Download OS to Device** option,
5. Open the binary file: QCRP932_Vxxx.bin, xxx equal or higher to 200,
6. Download the binary file to the CRP.

CRA Firmware Upgrade

The CRA firmware download can be done by using Unity Pro OS Loader tool.

The following procedure describes the main steps to perform a CRA upgrade:

1. Open The OS Loader tool,
2. Select the Modbus or Modbus Plus communication option,
3. Select the **Remote I/O Drop** and indicate the **Drop Number** (rotary switch),
4. Select the **Download OS to Device** option,
5. Open the binary file: QCRA932_Vxxx.bin, xxx equal or higher to 200,
6. Download the binary file to the CRA.

Using CCOTF

33

Subject of this Chapter

This chapter describes how to add / delete and modify modules in a Quantum configuration that has been upgraded to the CCOTF compatible version.

NOTE: This chapter doesn't apply to Hot Standby systems. For more details using CCOTF function on Hot Standby systems *(see Modicon Quantum, Hot Standby with Unity, User Manual)*

What's in this Chapter?

This chapter contains the following topics:

Topic	Page
General	326
Add / Delete a Module in the Quantum Local Racks	332
Add / Delete a Module in the Quantum RIO Drop	336
Modify Module Parameters	340

General

Quantum System Configuration Overview

A Quantum configuration can be made of a local rack and Remote I/O drops. The local rack and each remote I/O drop can be made of two backplanes:

- The Primary backplane contains the CPU or the Remote I/O drop adapter,
- The Secondary backplane is linked to the Primary backplane with two backplane expanders.

The picture below shows the elements that can be part of a Quantum configuration:

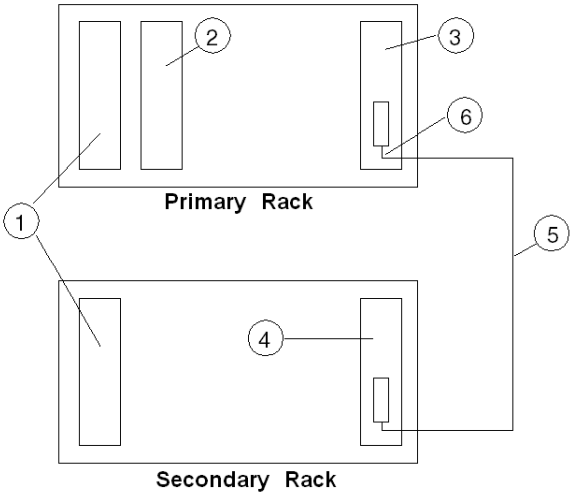

1. Power Supplies
2. CPU or RIO Adapter
3. First backplane Expander (140 XBE 100 00)
4. Second backplane Expander (140 XBE 100 00)
5. Backplane expander Cable (140 XCA 717 0•)
6. Cable end marked as “Primary”

General Advice

⚠ WARNING

RISK OF UNEXPECTED EQUIPMENT BEHAVIOUR

Before doing any CCOTF modification, ensure that your system responds appropriately.

Modifications made when the **on line modification in RUN** check box is selected can have an immediate impact on the process.

Failure to follow these instructions can result in death, serious injury, or equipment damage.

There are recommendations to take into account before adding / removing a module from the local racks or RIO drop:

- Adding a module in the Unity Pro configuration:
  - Configure the module in Unity Pro,
  - Plug the module in the hardware configuration,
  - Write the sequences of application program to manage the new module.
- Removing a module from the configuration:
  - Remove the sequence of application program that is related to the removed module,
  - Unplug the module from the hardware configuration,
  - Remove the module from the unity Pro configuration.

NOTE: It is recommended to add first the module in the Unity Pro configuration screen before adding the module in the PLC. The status bit of the module is set to 0 during the time where the module is configured but not present (Refer to Description of Quantum System Words %SW180 to %SW640 *(see Unity Pro, Program Languages and Structure, Reference Manual)*). This impacts the defect bits like `%S118` or `%S119` and `%S10`. This effect must be taken into account in the application program.

On the other hand, when a parameter is changed, the module is re-started and status bit is set to 0 during several ms. This impacts also the defect bits like `%S118` or `%S119` and `%S10`.

%SW98, %SW99 and %SW100 System Words

In order to manage the CRP / CRA compatibility, two system words *(see Unity Pro, Program Languages and Structure, Reference Manual)* are used: `%SW98` and `%SW99`.

The system words `%SW98` and `%SW99` can be used to diagnose compatibility issues regarding the CRA / CRP modules that are configured in a Quantum configuration.

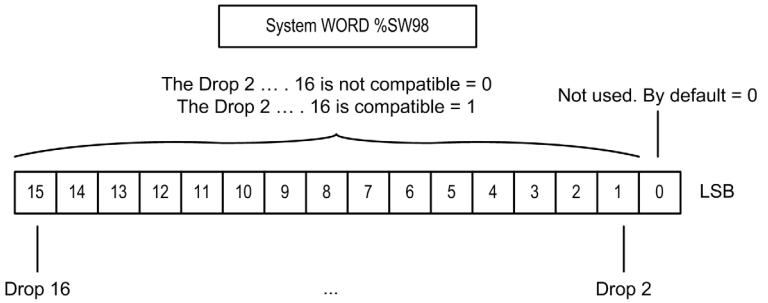

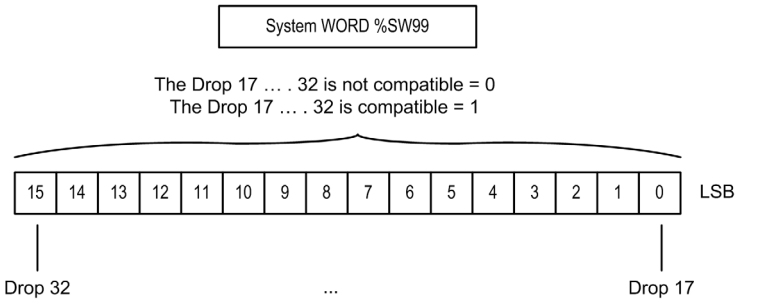

The following illustrations identify the operating options provided by the Status Register for the two system words %SW98 and %SW99:

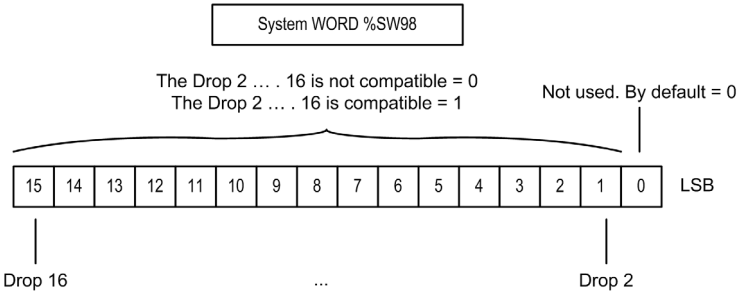

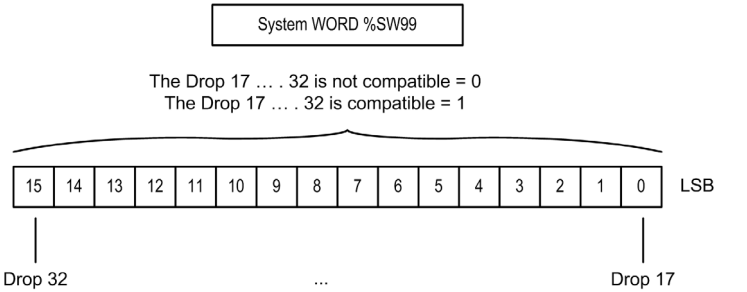

NOTE: All RIO drops configured in the RIO bus must be CCOTF compatible. This means that the corresponding bit in the system word %SW98 and %SW99 must be at 1. If this condition is not met and corresponding drop is healthy (CRA health bit is set), no CCOTF modification is allowed.

The system word %SW100 is incremented each time a CCOTF modification is performed in a PLC.

%SW100 = XXYY, where:

- XX is incremented each time an CCOTF modification is done in RUN state in an RIO drop,
- YY is incremented each time an CCOTF modification is done in RUN state in the local rack.

NOTE: 800 Series I/O and Sy/Max I/O are not CCOTF compatible. When the CCOTF function is configured, neither 800 Series I/O nor Sy/Max I/O must be connected to the RIO bus.

CCOTF Allowed Actions

The table below describes the possible main actions that can be done on discrete or analog modules in a Quantum local rack and a Quantum RIO Drop:

Local Rack (Primary or Secondary backplane)	Rio Drop (Primary or Secondary backplane)
Add in RUN mode	Add in RUN mode
Delete in RUN mode	Delete in RUN mode
Modify the parameters in RUN mode	Modify the parameters in RUN mode

NOTE: It is not possible to move a module in RUN mode. If this action is done, a pop-up is displayed in Unity Pro that indicates that this action must be done in STOP or OFFLINE mode.

The move action can be replaced by a **delete module** from one slot and then an **add module** in an other slot.

Number of CCOTF Modifications

Validating a CCOTF modification requires a Build change and only one CCOTF modification is allowed at a time. This is true in both the **Standard connected mode** as well as in the **Virtual connected mode**. To perform several CCOTF modifications it is necessary to proceed in several steps : perform a Build change to transfer the current modification in the PLC before doing next modifications.

The picture below shows what happens if the number of allowed CCOTF modifications is exceeded:

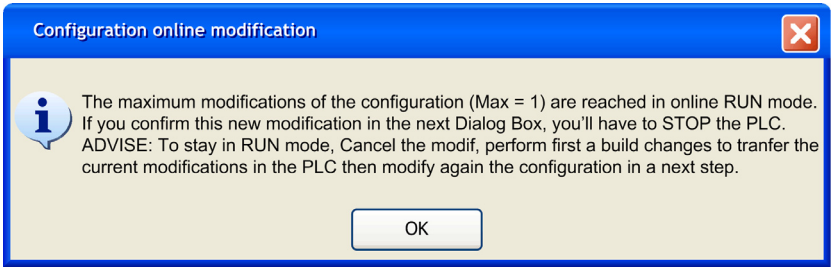

NOTE:

A CCOTF modification is valid with these two actions:

- Adding / Deleting / Modifying a module in the Unity Pro configuration screen is carried out.
- Performing a Build Change of the modifications.

Example of CCOTF Modification

Recommended CCOTF modification:

- Insert a new module in a free slot of the Unity Pro configuration screen,
- Modify the parameters of this module,
- Validate the parameters modification.

These 3 actions are considered as one CCOTF modification and require one build change.

NOTE: Program modifications (add a new sequence of code, suppress a sequence of code, modify a sequence of code) are not considered part of the CCOTF modification. Only I/O configuration modifications (if they are allowed) are counted.

Add / Delete a Module in the Quantum Local Racks

Nominal Use Case in Standard Connected Mode

⚠ WARNING

POSSIBLE UNEXPECTED EQUIPMENT BEHAVIOR

Remove the field wiring terminal strip on the module before adding or deleting a module.

Failure to follow these instructions can result in death, serious injury, or equipment damage.

The following flow-chart describes the action to be done when adding a module to the PLC

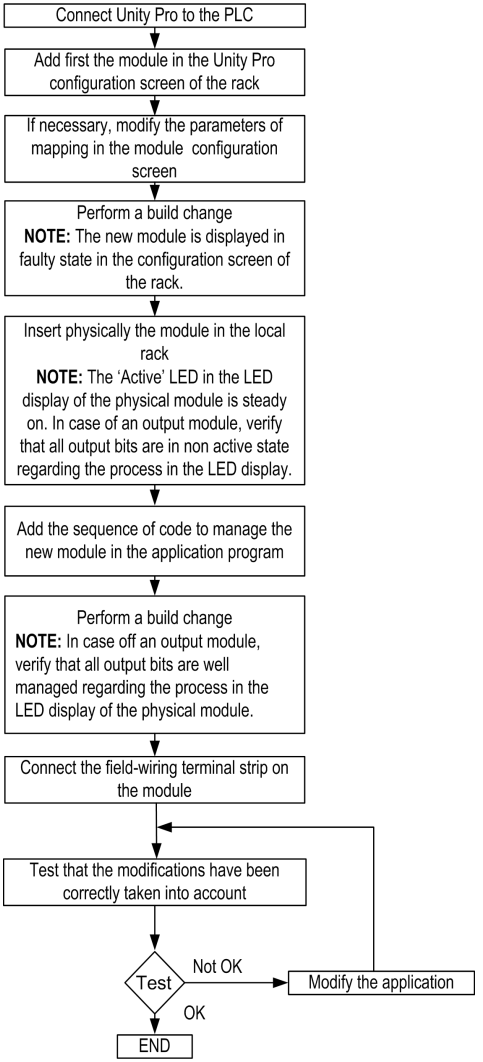

The following flow-chart describes the action to be done when deleting a module from the PLC

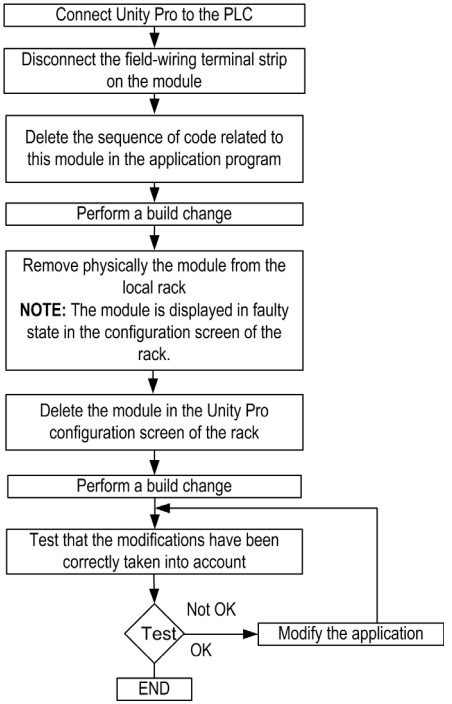

Nominal Use Case in Virtual Connected Mode

⚠ WARNING

POSSIBLE UNEXPECTED EQUIPMENT BEHAVIOR

Remove the field wiring terminal strip on the module before adding or deleting a module.

Failure to follow these instructions can result in death, serious injury, or equipment damage.

In this mode, it is possible to modify the I/O configuration when the application is offline. The application that is downloaded onto the PLCs has to be generated with the **Virtual connected mode** checkbox enabled in the **Project settings** →**General** →**Build settings**.

In OFFLINE mode:

The following flow-chart describes the action to be done in case of Add or Delete a module:

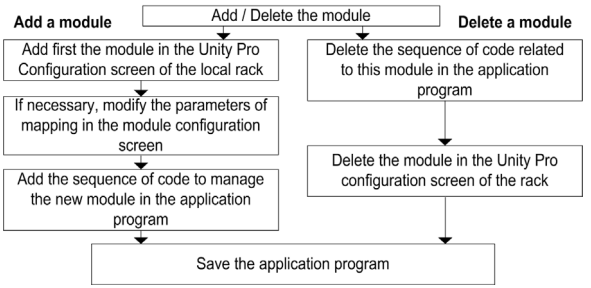

When connected to the Quantum system:

The following flow-chart describes the action to be done when connected to the Quantum system:

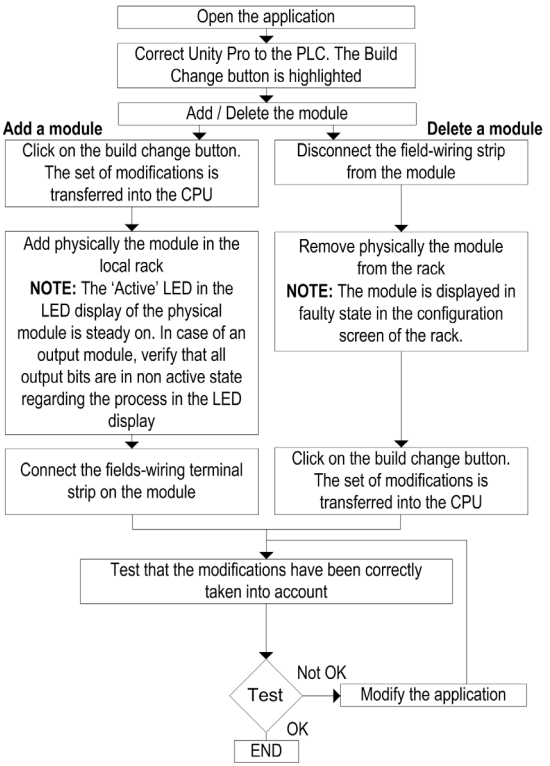

Add / Delete a Module in the Quantum RIO Drop

Nominal Use Case in Standard Connected Mode

⚠ WARNING

POSSIBLE UNEXPECTED EQUIPMENT BEHAVIOR

Remove the field wiring terminal strip on the module before adding or deleting a module.

Failure to follow these instructions can result in death, serious injury, or equipment damage.

The following flow-chart describes the action to be done when adding a module to the PLC:

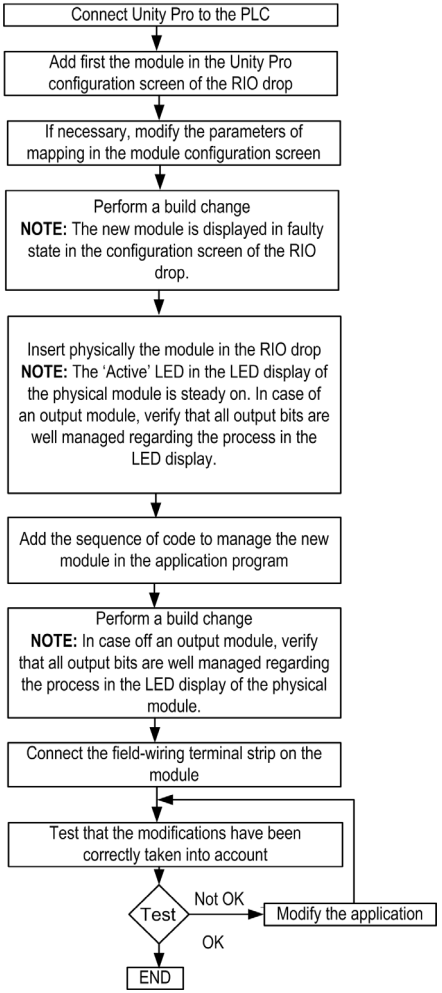

The following flow-chart describes the action to be done when deleting a module from the PLC:

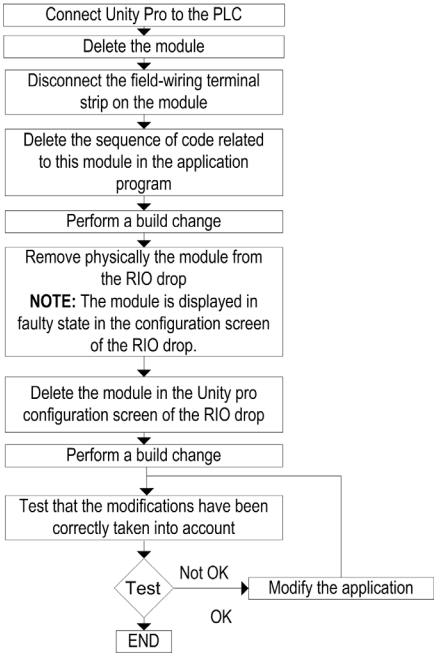

Nominal Use Case in Virtual Connected Mode

⚠ WARNING

POSSIBLE UNEXPECTED EQUIPMENT BEHAVIOR

Remove the field wiring terminal strip on the module before adding or deleting a module.

Failure to follow these instructions can result in death, serious injury, or equipment damage.

It is possible to modify the I/O configuration when the application is offline. The application that is downloaded in the PLCs has to be generated with the **Virtual connected mode** check box enabled in the **Project settings** dialog box.

In OFFLINE mode:

The following flow-chart describes the action to be done when connected to the Quantum system:

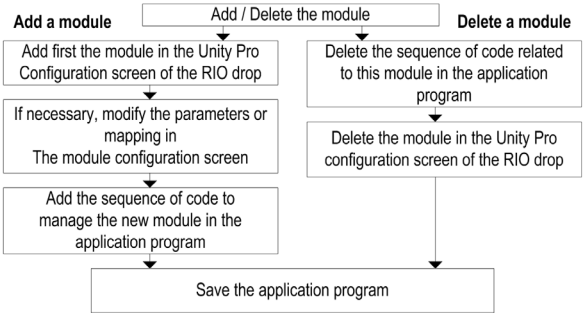

When connected to the Quantum system:

The following flow-chart describes the action to be done when connected to the Quantum system:

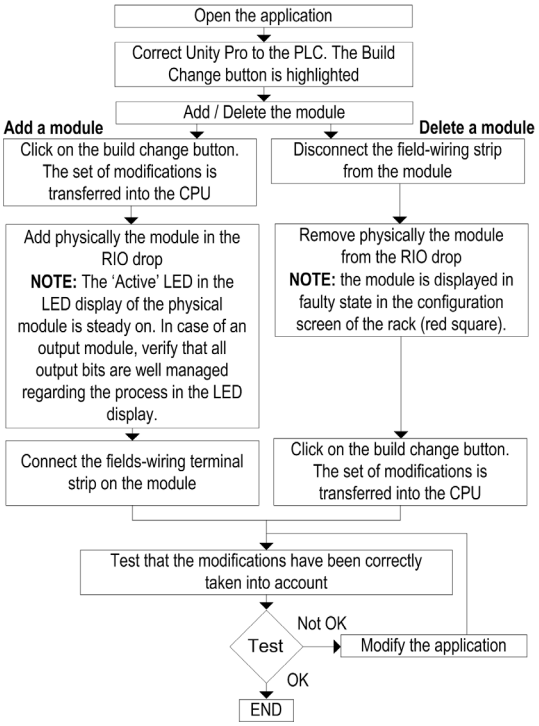

Modify Module Parameters

General

There are two kinds of parameters to take into account:

- Configuration parameters which are linked with the application memory mapping or the CPU operating system.
  Examples: Input / Output starting address.
- Command or adjust parameters which impacts the module behavior.
  Examples: data format, fallback value, etc. *(see Unity Pro, Program Languages and Structure, Reference Manual)*

NOTE: In a pre-existing module only the command and adjust parameters can be modified.

NOTE: When a new module is inserting for the first time, all parameters can be modified.

The following picture shows the configuration parameters screen

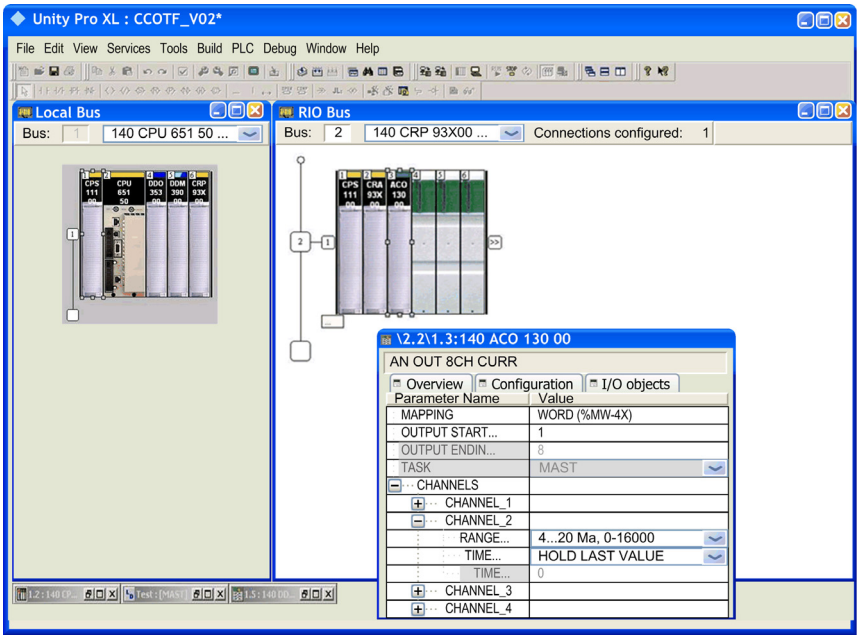

⚠ WARNING

RISK OF UNEXPECTED EQUIPMENT BEHAVIOUR

Before doing any CCOTF modification, ensure that your system responds appropriately.

Modifications made when the **on line modification in RUN** check box is selected can have an immediate impact on the process.

Failure to follow these instructions can result in death, serious injury, or equipment damage.

Nominal Use Case in Standard Connected Mode

The following flow-chart describes the action to be done:

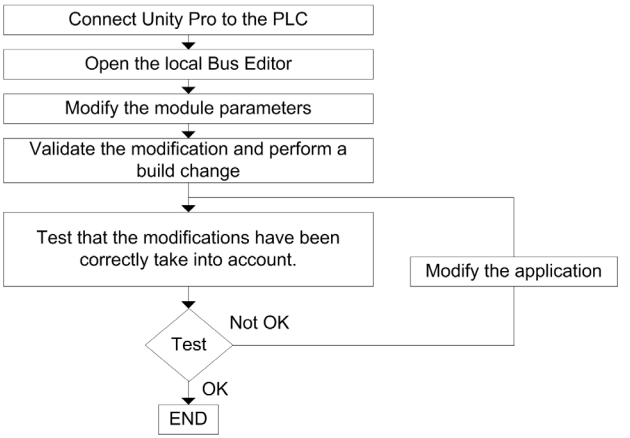

Nominal Use Case in Virtual Connected Mode

It is possible to modify the I/O configuration and the application offline. The application that is downloaded in the PLCs has to be generated with the **Virtual connected mode** check box enabled in the **Project settings** dialog box.

In OFFLINE mode:

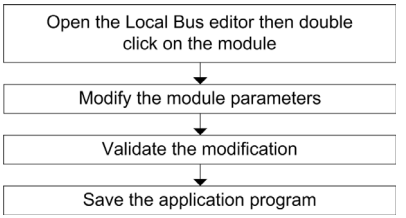

When connected to the Quantum system:

The following flow-chart describes the action to be done when connected to the Quantum system:

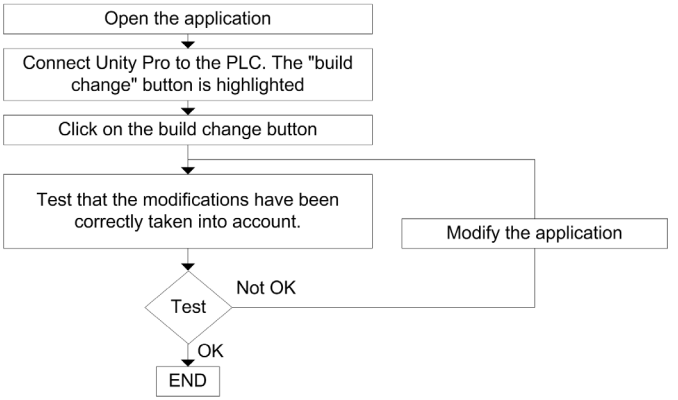

CCOTF Performance

34

Key Performance

Cycle Time Impact

The table below describes the cycle time impact depending on the modification done:

Modification	Max Time impact
Inserting a new module	30% of the Mast Task cycle time
Deleting a module	30% of the Mast Task cycle time
Modifying parameters of an existing module	30% of the Mast Task cycle time

NOTE: The percentage varies depending on the cycle time. For time cycle lower than 80 ms, the max time impact could be higher.

Time to Complete a CCOTF Modification

To understand how a CCOTF modification is performed, the following points have to be considered:

- A CCOTF modification is managed at the Mast task frequency.
- When a CCOTF modification is done in a RIO drop, several specific requests are sent to the CPU in order to modify the CPU memory area containing the I/O drop configuration. This modification is performed when the build change button is clicked in Unity Pro.
- Memory areas containing all the I/O drop configurations are contiguous in the CPU memory, if the CCOTF modification is related to the first RIO drop, all the other memory areas related to the other RIO drops have to be shifted in the CPU memory.
  If the CCOTF modification is related to the last RIO drop, only the area of this drop is modified.
  An important consequence of this point is:
  - A CCOTF modification in the last RIO drop will require less Mast task cycles than a CCOTF modification in the first RIO drop
- Inserting a new module is completed when the status bit of this module is set to 1.

NOTE: The worst case possible is to add a new module in the first RIO drop. The time needed by the system to complete a CCOTF modification is lower than 4 seconds.

CCOTF Troubleshooting

35

General Troubleshooting List

Overview

If a CCOTF modification can not be performed in the Quantum system, check the following potential problems and their solutions:

Potential Problem	Solution
The CPU does not have operating system version 02.80 or higher	Replace the CPU module with a CCOTF compatible one or upgrade the operating system
The CRP module does not have firmware version 02.00 or higher	Replace the CRP module with a CCOTF compatible one or upgrade the firmware
The CRA modules in all Quantum RIO drops that are connected to the RIO link do not have firmware version 02.00 or higher	Replace the CRA module with a CCOTF compatible one or upgrade the firmware
Unity Pro 5.0 or higher version is not installed	Install Unity 5.0 or higher version
The processor type is not replaced in the Unity Pro configuration tab	Replace the non CCOTF processor by the CCOTF corresponding processor in the Unity Pro configuration table
The **Online modification in RUN** check box is not selected.	Check **Online modification in RUN** in the CPU configuration tab *(see Modicon Quantum, Hot Standby with Unity, User Manual)*

Potential Problem	Solution
PLC has an application that is not CCOTF compatible	The application must be "rebuilt all" (after changing the processor and checking the Online Modification in RUN check box) and downloaded in PLC
At least one Quantum RIO drop is not compatible with the CCOTF function	Check that all Quantum RIO drops that are configured in the application have their corresponding bits at 1 in `%SW98` and `%SW99` (excepted those that are not powered on)
A Quantum RIO drop that has been upgraded has its corresponding bit at 0 in %SW98 or %SW99	Power off then power on the RIO drop

NOTE: A Quantum RIO drop which does not contain any I/O module has its corresponding bit at 0 in %SW98 or %SW99. In consequence, an empty Quantum RIO drop blocks CCOTF modifications.

Appendices

Introduction

This appendices provide additional information on the Quantum Automation System.

What's in this Appendix?

The appendix contains the following chapters:

Chapter	Chapter Name	Page
A	Miscellaneous Components	349
B	Power and Grounding Guidelines	361
C	Field Wiring Terminal Strip / Module Keying Assignment	387
D	CableFast Cabling	393
E	ConneXium Ethernet Cabling System	443
F	Agency Approvals and Conformal Coating	449
G	System Specifications	461

Miscellaneous Components

A

Introduction

This appendix provides information on the various miscellaneous components of the Quantum system, with illustrations and descriptions.

What's in this Chapter?

This chapter contains the following topics:

Topic	Page
Racks and Brackets Tables	350
Cables	351
Spare Parts Table	352
Illustrated Miscellaneous Components	353

Racks and Brackets Tables

Racks

Part Number	Module Slots	Weight
140 XBP 002 00	2	0.23 kg (0.5 lb)
140 XBP 003 00	3	0.34 kg (0.75 lb)
140 XBP 004 00	4	0.45 kg (1.0 lb)
140 XBP 006 00	6	0.64 kg (1.4 lb)
140 XBP 010 00	10	1.0 kg (2.2 lb)
140 XBP 016 00	16	1.58 kg (3.5 lb)

Mounting Brackets

Part Number	**Description**
140 XCP 401 00	125 mm (4.92in) Bracket
140 XCP 402 00	20 mm (0.79in) Bracket

Cables

Cabling

Description	Part Number	Length
RS-232 programming cable	990 NAA 263 20	2.7 m (12 ft)
	990 NAA 263 50	15.5 m (50 ft)
Modbus Plus trunk cable	490 NAA 271 01	30 m (100 ft)
	490 NAA 271 02	152 m (500 ft)
	490 NAA 271 03	304 m (1000 ft)
	490 NAA 271 04	456 m (1500 ft)
	490 NAA 271 06	1520 m (5000 ft)
Modbus Plus drop cable	990 NAD 211 10	2.4 m (8 ft)
	990 NAD 211 30	6 m (20 ft)
Modbus Plus drop cable (left side)	990 NAD 218 10	2.4 m (8 ft)
	990 NAD 218 30	6 m (20 ft)
Modbus Plus drop cable (right side)	990 NAD 219 10	2.4 m (8 ft)
	990 NAD 219 30	6 m (20 ft)
Modbus Plus plastic DIO tap	990 NAD 230 00	
Modbus Plus ruggedized DIO tap	990 NAD 230 10	
Prefabricated RG-6 S908 RIO drop cable	AS-MBII-003	14 m (50 ft)
	AS-MBII-004	43 m (140 ft)

Spare Parts Table

Miscellaneous Spare Parts Table

The following table shows the miscellaneous spare parts for the Quantum modules.

Spare Part Number	Description
140 CPS 111 00	AC Power Supply Door Label
140 CPS 1•4 •0	AC Power Supply Door Label
140 CPS 211 00	DC Power Supply Door Label
140 CPS 2•4 00	DC Power Supply Door Label
140 XTS 005 00	IP20 7 Pos Connector
140 XTS 001 00	IP20 40 Pos Connector

Illustrated Miscellaneous Components

99 0 NAD 218•0 Connector Orientation

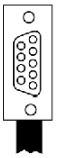

990NAD218X0

140 XCP 200 00 Coding Kit

The coding kit contains six white sets of plastic keys and 12 yellow sets.

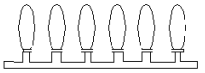

140 XCP 500 00 Empty Module

The empty module below is without a terminal strip.

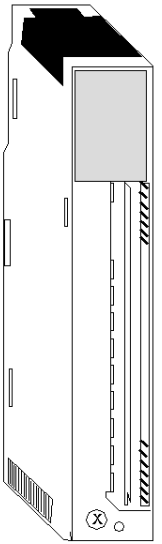

140 XCP 510 00 Empty Module

The empty module below is without the terminal strip and with a door cover.

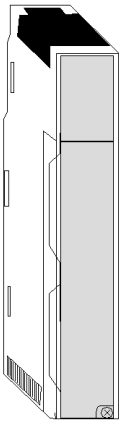

140 XCP 600 00 Terminal Strip Jumper Kit

The terminal strip jumper kit contains 12 jumpers.

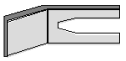

140 XTS 001 00 40-pin Field Wiring Terminal Strip

The 40-pin field wiring terminal strip has a screw-down bolted cover.

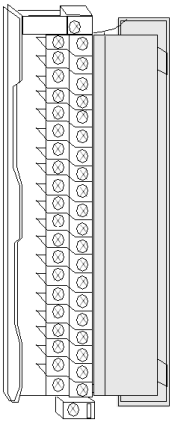

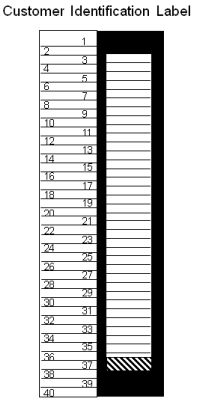

140 XTS 002 00 40-pin Field Wiring Terminal Strip

The 140 XTS 002 00 differs from the 140 XTS 001 00 in that it does not have the clear plastic safety cover over the screw-down bolts.

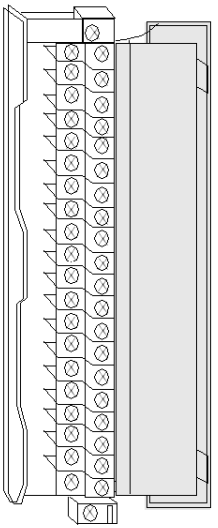

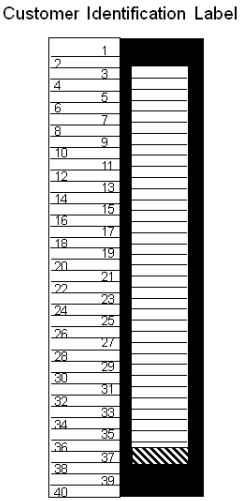

140 XTS 005 00 Seven-pin Field Wiring Terminal Strip

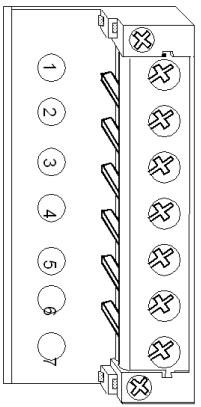

Front view

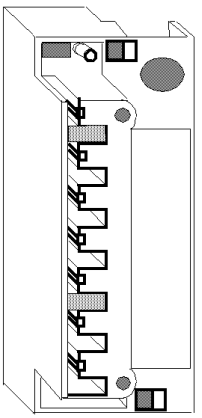

Rear view

990 XCP 900 00 Battery

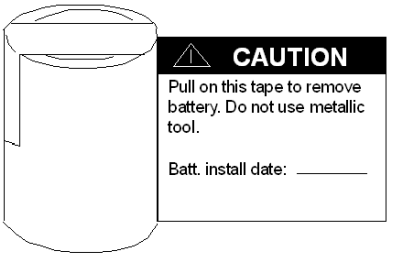

990 XCP 980 00 CPU Battery

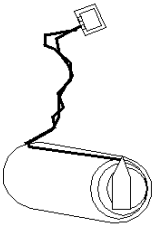

990 NAD 230 00 Modbus Plus Tap

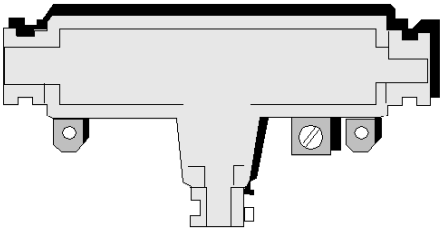

990 NAD 230 20/21 Modbus Plus Super Tap

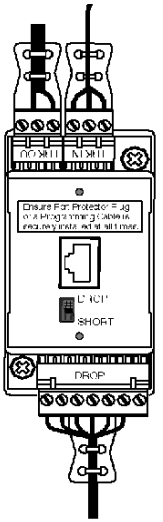

990 NAD 230 10 Ruggedized Modbus Plus Tap

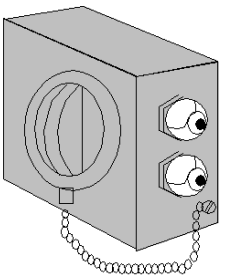

990 NAD 230 11 Terminator

990 NAA 215 10 Programming Cable

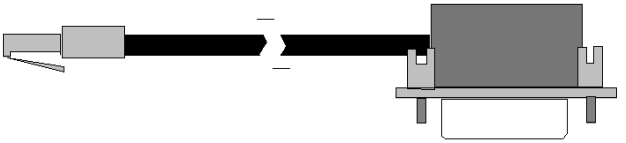

990 XTS 003 00 200 Series I/O Conversion Connector

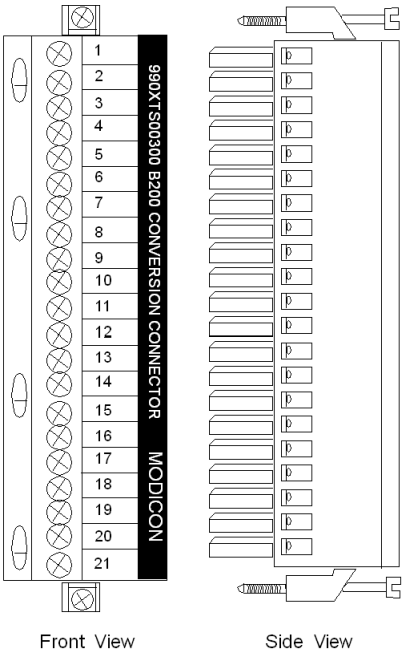

MA-0185-100 Remote I/O Tap

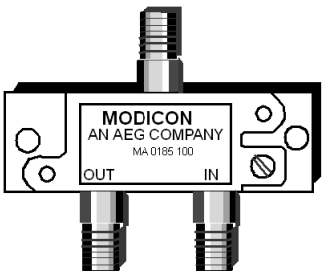

MA-0186-100 Remote I/O Splitter

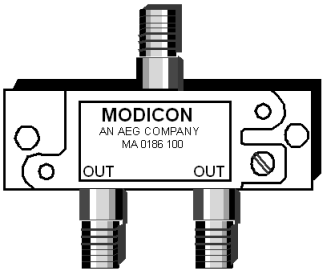

MA-0331-100 Remote I/O Trunk Splitter

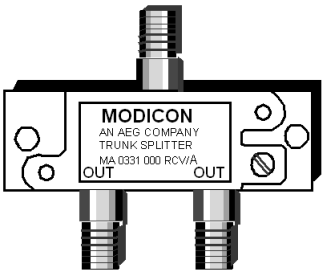

MA-0329-001/MA-0329-002 Remote I/O F Connectors

The MA-0329-001 F connector supports quad shield RG 6 cable, and the MA-0329-002 F connector supports non-quad shield RG6 cable.

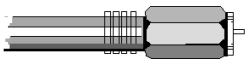

043509446/52-0487-000 Remote I/O BNC Connectors

The 043509446 BNC connector supports quad shield RG 6 cable, and the 52-0487-000 BNC connector supports non-quad shield RG 6 cable.

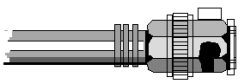

Power and Grounding Guidelines

B

Introduction

This appendix provides information of power and grounding considerations for AC and DC powered systems, grounding and closed system installation.

What's in this Chapter?

This chapter contains the following topics:

Topic	Page
General Information	362
Batteries as DC power supplies	364
AC Power and Grounding Considerations	365
DC Power and Grounding Considerations	369
Closed System Installation	373
Modbus Plus Termination and Grounding	375
Fiber Repeaters	378
Grounding of RIO Networks	380
Analog Grounding Consideration	382

General Information

Overview

⚠ DANGER

ELECTRIC SHOCK

The user is responsible for compliance with national and local electrical code requirements with respect to grounding of all equipment. Read, understand and implement the wiring and grounding requirements in this section.

Failure to follow these instructions will result in death or serious injury.

The required power and grounding configurations for AC powered and DC powered systems are shown in the following illustrations. Also shown are power and grounding configurations of AC and DC systems required for CE* compliance.

NOTE: Each rack shown has its own ground connection; that is, a separate wire returning to the main grounding point, rather than "daisy chaining" the grounds between power supplies or mounting plates.

The main grounding point is the local common connection of the panel ground, equipment ground, and earth grounding electrode.

CE Compliance

The CE mark indicates compliance with the European Directive on Electromagnetic Compatibility (EMC) (89/336/EEC) and the Low Voltage Directive (73/23/EEC).

NOTE: In order to maintain CE compliance, the Quantum system must be installed in accordance to these instructions.

Chassis Grounding

A chassis ground wire is required for each rack. The wire is connected between one of four ground screws (located on the rack) and the main ground point of the power system. This wire should be green (or green with a yellow stripe) and the AWG rating must be (at a minimum) sized to meet the fuse rating of the supply circuit.

Power Supply Grounding

On each power supply connector there is a ground connection. This connection must be made for safety reasons. The preferred connection is between the power supply connector ground terminal and one of the rack ground screws. This wire should be green (or green with a yellow stripe) and at a minimum the same AWG rating as the power connections to the supply.

In racks with multiple power supplies, each supply should have a ground connection between its input connector and the rack ground screws.

NOTE: It is recommended that the power supply, feeding the I/O modules, is grounded at the main ground point.

Other Equipment Grounding

Other equipment in the installation should not share the grounding conductor of the system. Each piece of equipment should have its own grounding conductor returning to the main grounding point from which the equipment power originates.

Systems with Multiple Power Feeds

In systems with multiple power feeds, the grounding should proceed in the same manner as single feed systems. However, a zero volt potential difference must be maintained between the equipment grounding conductors of the separate systems to prevent current flow on communication cables.

Batteries as DC power supplies

Overview

Power Supplies usually provide the adequate isolation from high **and** low frequency RF noise because of filtered outputs. Batteries provide only good filtering abilities against low frequency noise.

To protect battery powered networks, additional RFI filters are required such as:

- CURTIS F2800 RFI filters
- TRI-MAG, Inc. FL Series Filters or equivalent

AC Power and Grounding Considerations

AC Powered Systems

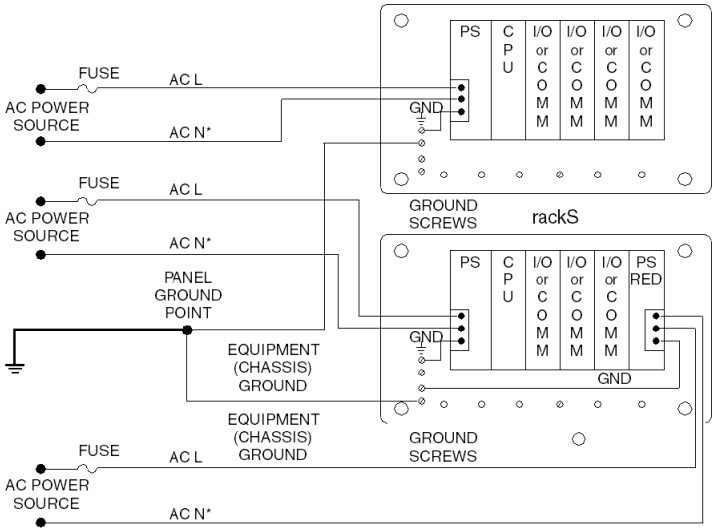

NOTE: *AC N should be earth grounded. If it is not earth grounded, it must be fused (refer to local codes).

AC System with CE Compliance

NOTE: 140 CPS 111 00, 140 CPS 114 20 and 140 CPS 124 20 power supplies are designed to not require the external EMI filter, ferrite bead and Olflex cable.

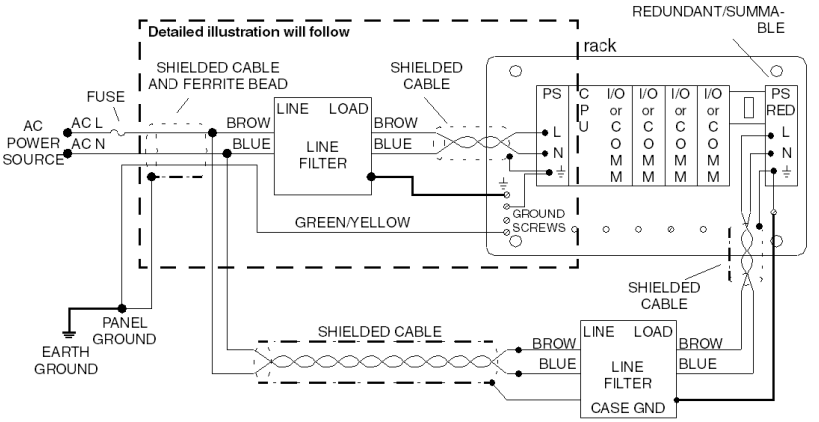

NOTE: To maintain CE compliance with the European Directive on EMC (89/336/EEC), the AC power supplies must be installed per the European Directive on EMC (89/336/EEC).

NOTE: 140 XTS 001 00 and 140 XTS 005 00 connector models must be used in systems that must meet closed system requirements as defined in EN 61131-2 (without relying upon an external enclosure).

External Line Filters must be protected by a separate enclosure which meets the finger-safe requirements of IEC 529, Class IP20.

Detail

The following figure shows the details of an AC powered system with CE compliance.

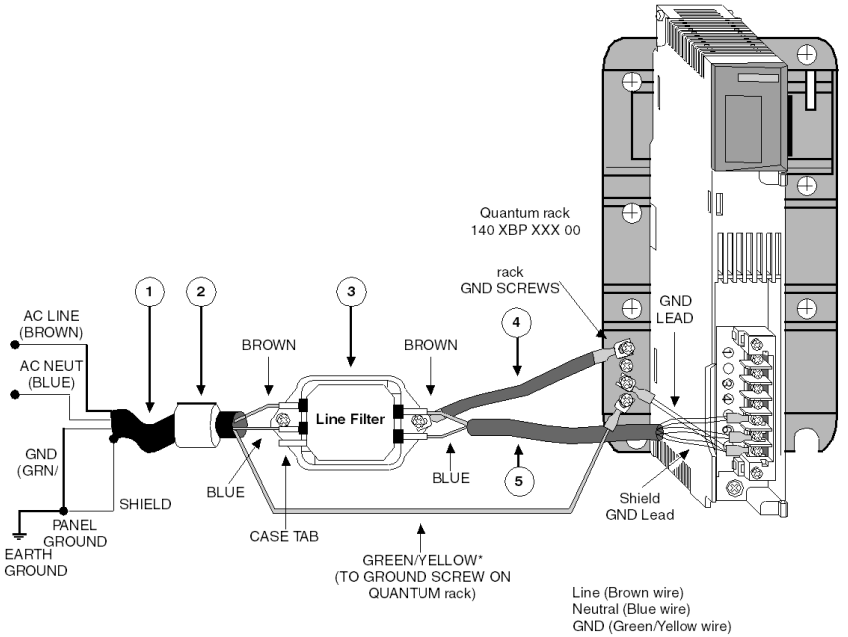

NOTE: Only one ground wire per rack is required. In redundant and summable systems, this lead is not connected for the additional line filter/power supply.

NOTE: For detailed wiring diagrams, refer to the part Power Supply Modules Power Supply Modules *(see page 201)*

Part List

Callout	Vendor or equivalent	Part Number	Description	Instruction
1	Oflex-Series 100 cy	35005	Line Cord	Terminate the shield at panel ground; the filter end of the shield is not terminated.
2	Stewart Fairite	28 B 0686-200 2643665702	Ferrite Bead	Install next to the filter and fasten with tie wraps at both ends of the ferrite bead.
3	Schaffner	FN670-3/06	Line Filter (fast on terminals) Dimensions: Length:85 mm (3.4 in) Width: 55 mm (2.2 in) Height: 40 mm (1.6 in) Mounting Holes: 5.3 mm (0.2 in) diameter 75 mm (3 in) centerline mounted. Fast on terminals: 6.4 mm (0.25 in)	Install next to the power supply.
4	NA	NA	Ground Braid Flat braid 134 mm (0.5 in) with a maximum length of 100 mm (4 in)	NA
5	Oflex Series 100cy	35005	Shield Cable Maximum length: 215 mm (8.5 in)	Third lead (green/yellow) is not used; terminate the shield at the power supply ground terminal.

DC Power and Grounding Considerations

24 VDC Powered System Figure

The following figure shows a 24 VDC powered system.

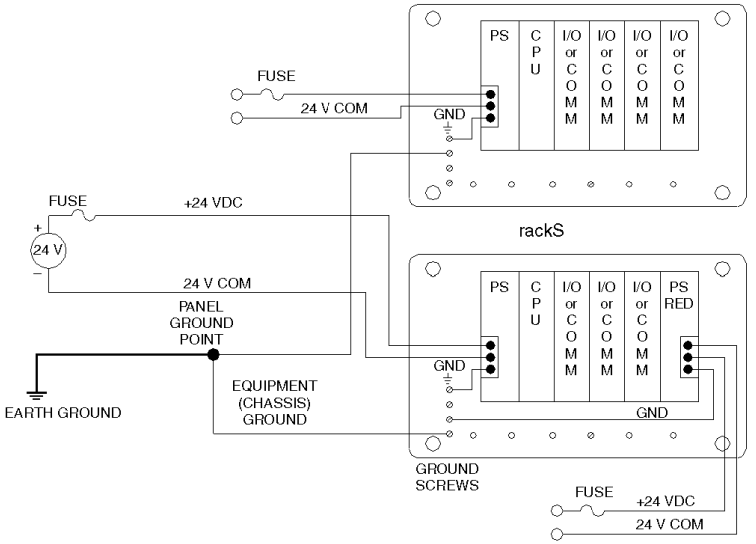

NOTE: It is recommended to earth ground the 24 VDC power supply.

24 VDC Powered System for CE Compliance

The following figure shows a 3 A, 24 VDC powered system for CE compliance.

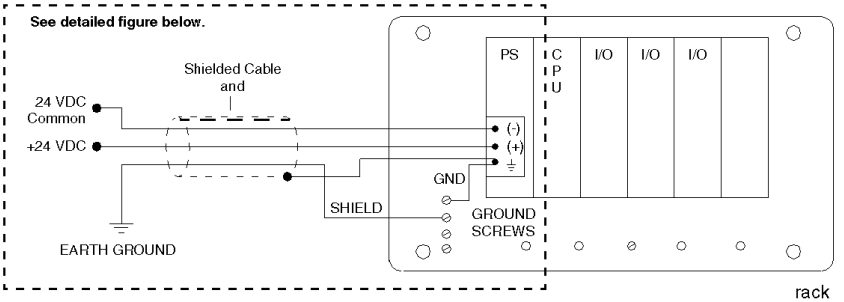

⚠ CAUTION

CE MARK NONCOMPLIANCE

The 140 CPS 211 00, the 140 CRA 211 20, and the 140 CRA 212 20 must be installed per the European Directive on EMC (89/336/EEC) and the Low Voltage Directive (73/23/EEC).

Failure to follow these instructions can result in injury or equipment damage.

24 VDC Detailed Figure

The following figure shows the detailed installation of a 3 A, 24 VDC powered system for CE compliance.

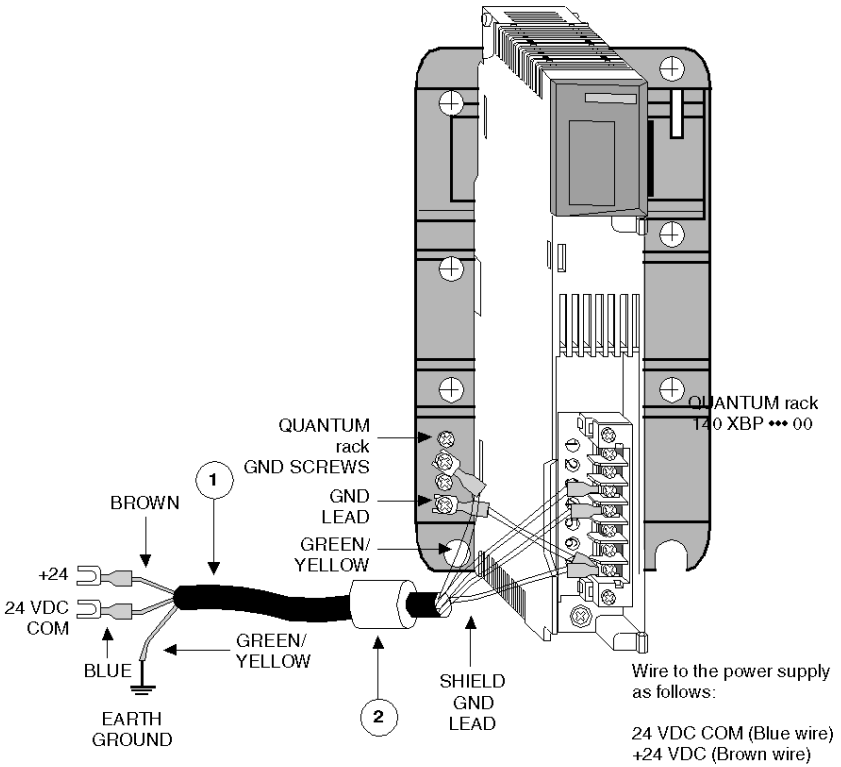

NOTE: For detailed wiring diagrams, refer to the part Power Supply Modules Power Supply Modules *(see page 201)*

Parts List.

Callout	Vendor (or equivalent)	Part Number	Description	Instruction
1	Offlex Series 100cy	35005	Line Cord	Terminate the shield at the power supply ground terminal
2	Sreward Fairite	28 BO686-200 2643665702	Ferrite Bead	Install next to the filter and fasten with tie wraps at Both ends of the ferrite bead.

125 VDC Powered System Figure

The following figure shows a 125 VDC powered system for CE compliance.

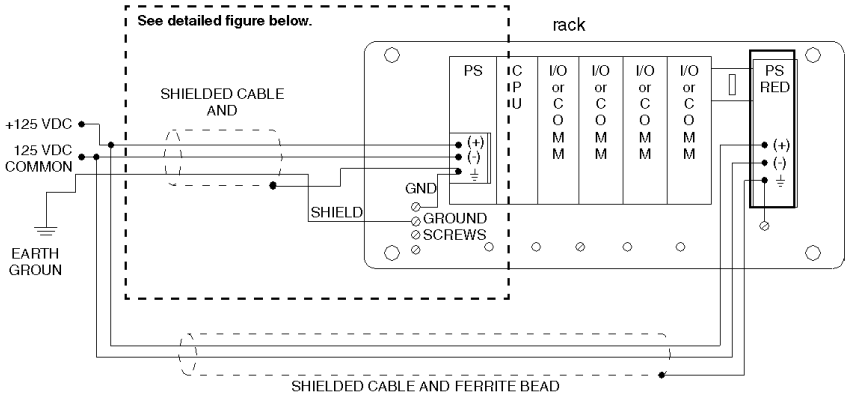

⚠ CAUTION

CE MARK NONCOMPLIANCE

The 140 CPS 511 00 & the 140 CPS 524 00 must be installed per the European Directive on EMC (89/336/EEC) and the Low Voltage Directive (73/23/EEC).

Failure to follow these instructions can result in injury or equipment damage.

125 VDC Detailed Figure

The following figure shows the detailed installation for the 125 VDC powered system for CE compliance.

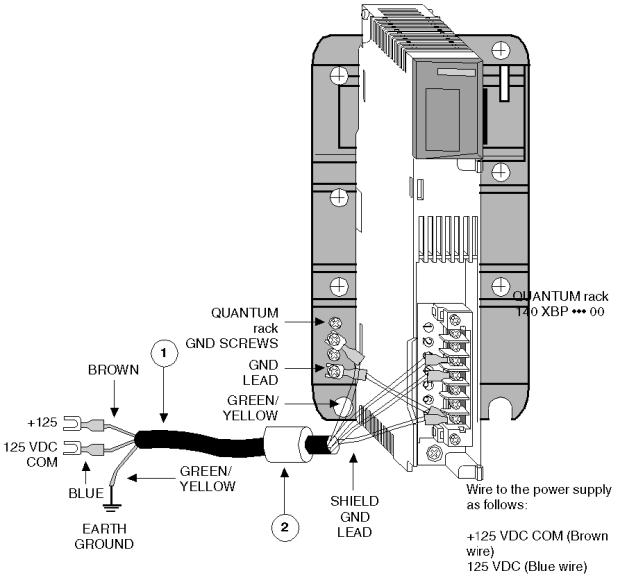

NOTE: For detailed wiring diagrams of power supply modules, refer to the part Part Power Supplies *(see page 201)*

Parts List.

Callout	Vendor (or equivalent)	Part Number	Description	Instruction
1	Offlex Series 100cy	35005	Line Cord	Terminate the shield at the power supply ground terminal
2	Sreward Fairite	28 BO686-200 2643665702	Ferrite Bead	Install next to the filter and secure with tie wraps at Both ends of the ferrite bead.

⚠ CAUTION

EUROPEAN COMPLIANCE

The 140 CPS 511 00 & the 140 CPS 524 00 must be installed per the European Directive on EMC (89/336/EEC) and the Low Voltage Directive (73/23/EEC).

Failure to follow these instructions can result in injury or equipment damage.

Closed System Installation

Overview

For installations that must meet closed system requirements as defined in EN 61131-2 (without relying upon an external enclosure) in which an external line filter is used, it must be protected by a separate enclosure that meets the finger-safe requirements of IEC 529, Class IP20.

AC/DC Installation

The following figure shows an AC/DC powered systems that meets CE closed system compliance.

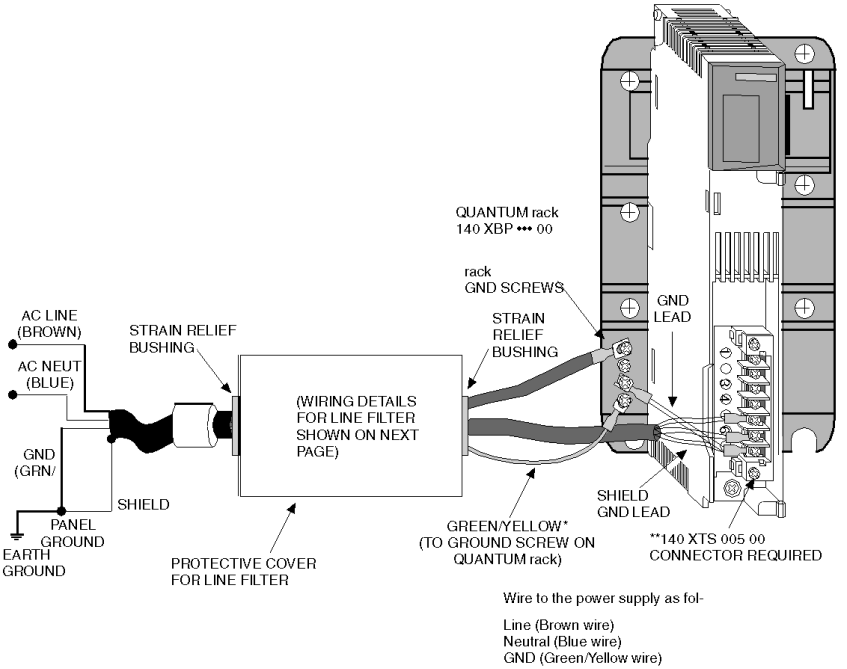

* Only one ground wire per rack is required. In redundant and summable systems, this lead is not connected for the additional line filter/power supply

** Connectors 140 XTS 005 00 (for power supplies) and 140 XTS 001 00 (for I/O modules) must be ordered separately

NOTE: For detailed wiring diagrams, refer to the part Power Supply Modules Power Supply Modules *(see page 201)*

Protective Cover

The protective cover must completely enclose the line filter. Approximate dimensions for the cover are 12.5 x 7.5 cm. Wire entry/exit shall be through strain relief bushings.

Line Filter Connections

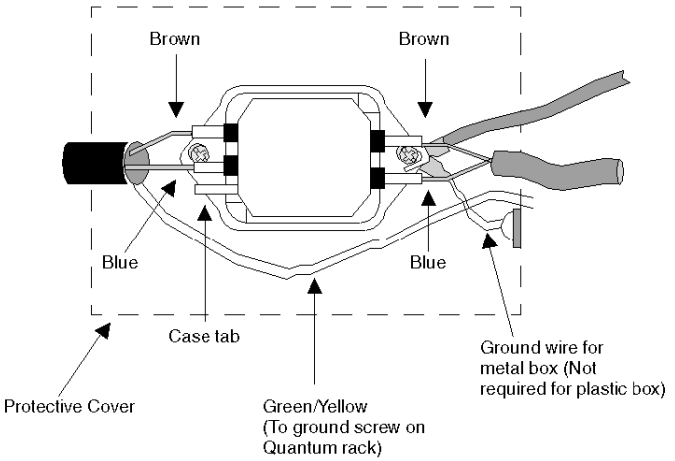

Modbus Plus Termination and Grounding

How Taps Have to Be Terminated

A tap is required at each site on the trunk cable to provide connections for the trunk cable and drop cable. Each tap contains an internal terminating resistor that can be connected by two jumpers. Two jumper wires are included in the tap package, but are not installed. At the taps at the two ends of a cable section, you must connect both of the jumpers to provide the proper terminating impedance for the network. Taps at inline sites must have both jumpers removed. The impedance is maintained regardless of whether a node device is connected to the drop cable. Any connector can be disconnected from its device without affecting the network impedance.

The diagram shows a Modbus Plus Network connection with terminating resistors and grounding.

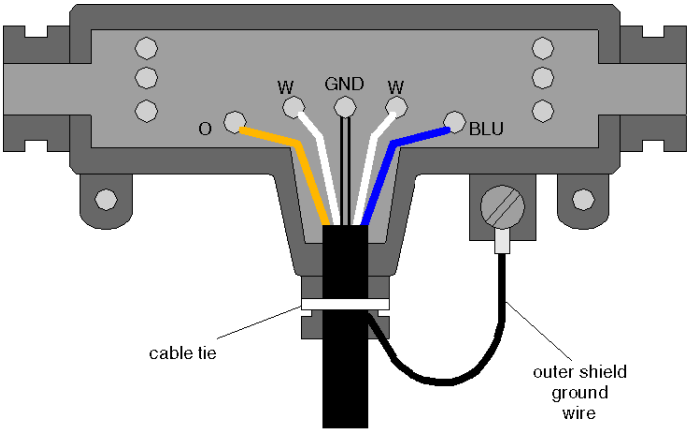

Grounding at the Tap

Each tap has a grounding screw for connection to the site panel ground. Schneider Electric drop cables have a grounding lug in the cable package. This must betightly crimped or soldered on the cable and connected to the grounding screw on the tap.

The diagram shows a drop cable, connected and grounded with a tap.

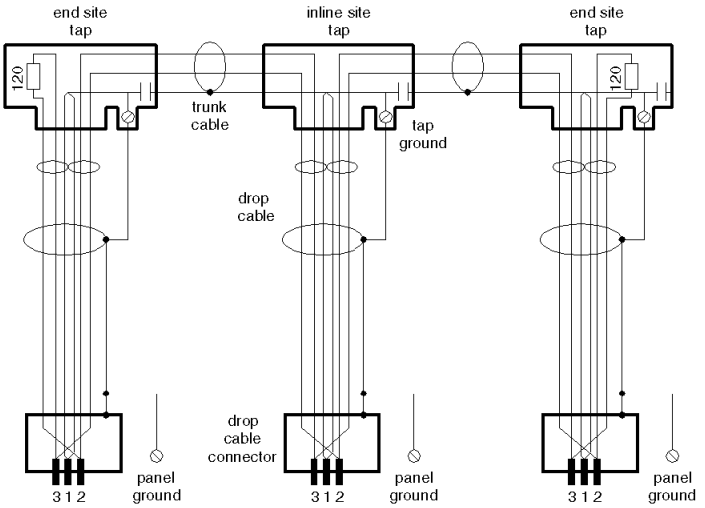

The node device end of the drop cable has a lug which must be connected to the node device's panel ground. The network cable must be grounded through this connection at each node site, even when the node device is not present. The ground point must not be left open. No other grounding method can be used.

Grounding at the Device Panel

Modbus Plus network drop cables require a ground connection to the rack. The connection is made by means of a metal loop clamp that grounds the cable shield to the ground point.

The following figure shows the Modbus Plus grounding at the device panel.

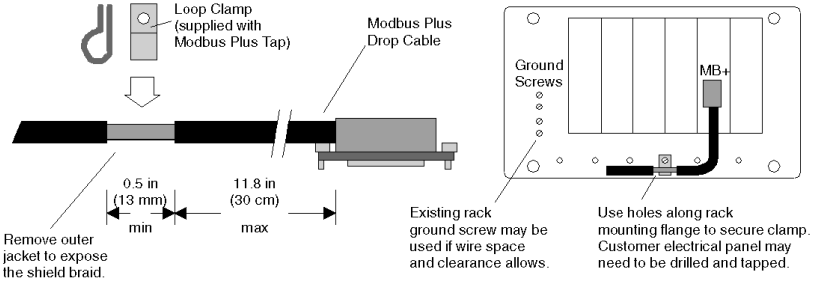

NOTE: To maintain CE compliance with the European Directive on EMC (89/336/EEC), the Modbus Plus drop cables must be installed in accordance with these instructions.

Preparing the Cable for Grounding

This table shows the steps to prepare the cable for grounding

Step	Action
1	Determine the distance from the cable´s end connector to the intended ground point on your rack or panel
2	Stripping of the cable´s outer jacket **Note:** Keep in mind, that the maximum allowable distance from the ground point to the cable´s end connector is 11.8 in (30 cm)
3	Remove 0.5 -1 in (13-25 mm) of the cable´s outer jacket to expose the shield braid as shown in the figure above.)
4	If the panel has a suitable ground point for mounting the cable clamp, install the clamp at that point

Fiber Repeaters

Grounding a Modbus Plus Fiber Repeater

Step	Action
1	Connect the Repeater to the site ground **Result:** The Repeater obtains it´s ground through the chassis ground screw or DC (-) wire.
2	Use a continuity tester to verify, that the repeater is grounded to the site ground.

Connecting AC Power to the Repeater

Step	Action
1	Remove the power at it´s source.
2	If necessary install a different plug on the cable for the power source at your site. **Note:** The AC power cable supplied with the repeater is keyed for North American 110-120 VAC outlets.
3	Remove the AC power cable from the repeater
4	Set the power selector plug to the 110-120 VAC or 220-240 VAC position for the power source at your site. To do this: **1.** Remove the power selector plug by prying under it´s tab using a small screw driver. **2.** Set the plug to the proper voltage position as shown on the plug body. **3.** Reinsert the plug.
5	Insert the AC power cable in the rear panel connector.
6	Insert the AC power cable into the power source.

Connecting DC Power to the Repeater

Step	Action
1	Remove the power at it´s source.
2	Connect the source to the DC power terminals, observing the proper polarity.

RIO Shield-to-chassis Switch

The switch on the rear of the repeater is used to specify the repeater´s relationship to chassis ground.

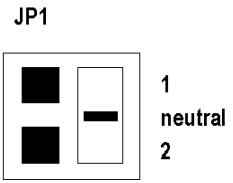

Switch position	Function
1	RIO cable shield is isolated from chassis ground by a capacitor (i.e if low frequency is a problem).
neutral	Repeater is configured as a drop on the optical link (shipped position).
2	RIO cable shield is connected directly to chassis ground (i.e. the same ground as the main RIO head).

Grounding of RIO Networks

Overview

The Remote I/O communication is based on single point grounding, that is located at the head.Coaxial cable and taps have no additional connection to the ground to help eliminate low frequency ground loops.

Missing grounding

A cable system must be grounded at all times to ensure safety and proper operation of the nodes on the network. The cable system is grounded by the RIO head processor. But if the cable is removed, the ground connection doesn't work anymore.

Ground Blocks

Ground blocks provide grounding, even if the cable is removed.

Additional properties are as follows:

- Low insertion loss
  Only if five or more are used, they have to be considered in the trunk attenuation with 0.2 dB each. The impedance is 75 Ω and the return loss >40 dB.
- Wide application frequency

Ground Block structure

The ground block 60-0545-000 consists of two female in-line F connectors and a separate screw hole binding for attaching a ground wire. The grounding block has two mounting holes, allowing it to be mounted to a flat surface. Two styles of the ground block 60-0545-000 are available and may be used interchangeable.

This diagram shows the dimensions of the two available 60-0545-000 grounding blocks.

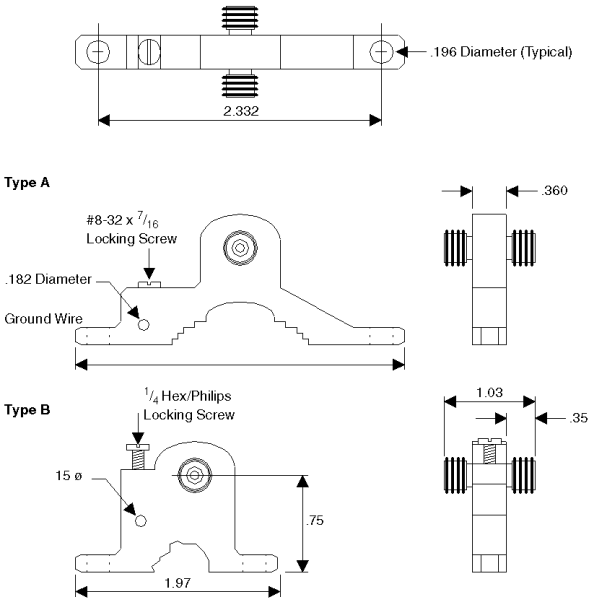

NOTE: Local building codes may require the cable shield tied to ground, whenever the cable system exits and/or enters a new building (NEC Article 820-33).

Surge protection

Surge protection is available for coaxial network trunks that span between buildings and are exposed to lightning. The recommended product has internal gas discharge surge protectors that absorb very high currents induced into the cable system by near-lightning strikes. The device indicated has insertion loss of less than 0.3 dB at the network operating frequency. The unused drop ports must be terminated with a 52-0402-000 Port Terminator. If desired, shrink tubing may be used to seal the F connections.

The device should be accessible for maintenance, and be protected from the elements if installed outside. The threaded stud should be connected to building ground.

The recommended product is Relcom Inc. p/n CBT-22300G. Contact information is:

Relcom Inc.

2221 Yew Street Forest Grove, Oregon 97116, USA

Tel: (800) 382-3765

www.relcominc.com

Analog Grounding Consideration

Overview

For the Analog Input Modules *(see Quantum with Unity Pro, Discrete and Analog I/O, Reference Manual)*, the earthing must be done by the analog wires. Analog wires must be grounded directly when entering the cabinet. You may use an analog cable grounding rail. This section describes this approach.

Principle

High frequency interference can only be discharged via large surfaces and short cable lengths.

Guidelines

Follow these wiring guidelines:

- Use shielded, twisted-pair cabling.
- Expose 2.5 cm (1 inch) as shown:.

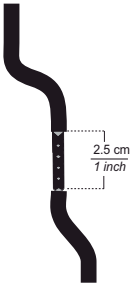

- Make sure the wire is properly grounded (connection between the grounding bar and the clamps).

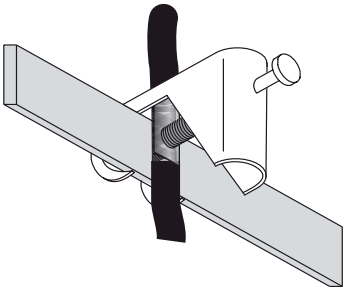

NOTE: It is strongly recommended to use the STB XSP 3000 grounding kit and, either the STB XSP 3010 or the STB XSP 3020 clamp kits.

Assembly of the STB XSP 3000 Kit

The followed kit is used to have a high quality of the analog signal.

The following table describes the STB XSP 3000 grounding kit.

Elements	Description
Side Supports and grounding bar	The following illustration describes the assembly of the side supports and the grounding bar. 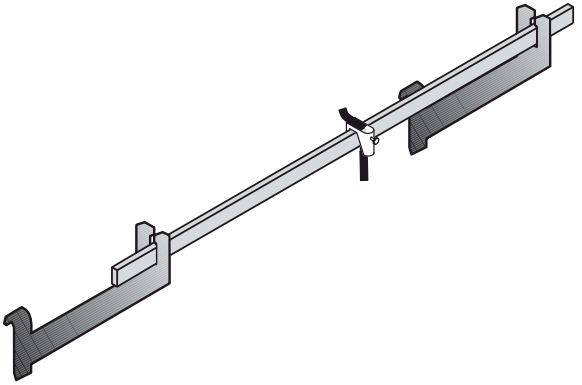

The following table describes the step to assemble the STB XSP 3000 grounding kit:

Step	Description
1	Push the side supports against the walls and tighten the screws. 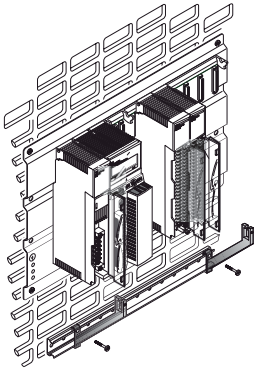
2	Choose the length of the grounding bar. 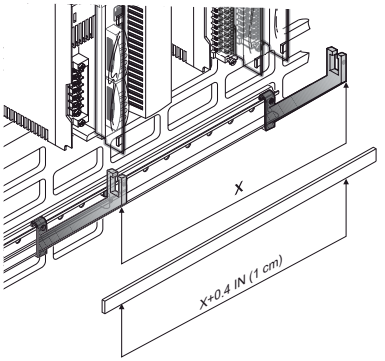
3	Insert the functional grounding terminal block and tighten the screw 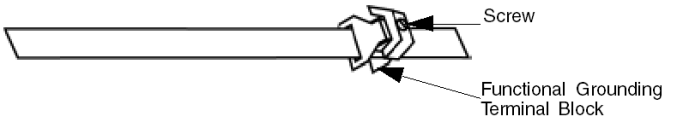

Step	Description
4	Fix the grounding bar at the side supports. 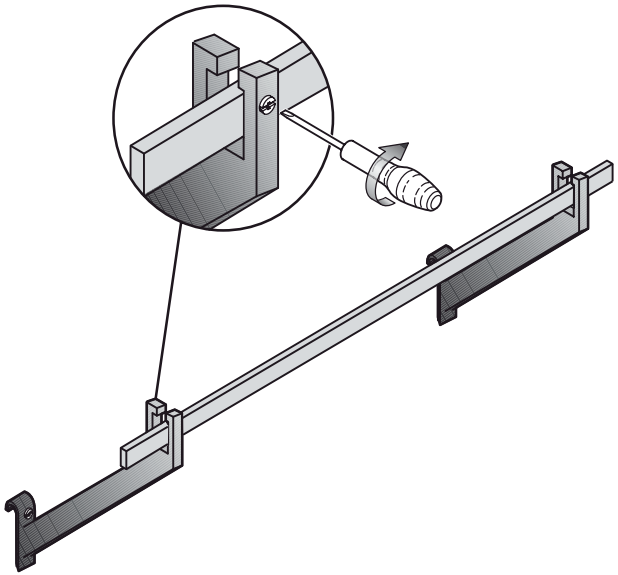
5	The following figure describes the final assembly of the STB XSP 3000. 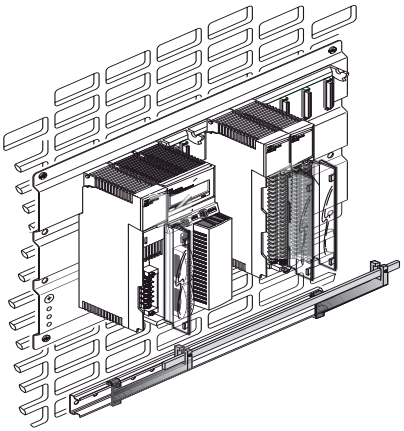

STB XSP 3010 Kit and STB XSP 3020

The following table describes the different cable sections (in AWG and mm2):

Reference	AWG	mm2
STB XSP 3010	16 to 9	1.5 to 6.5
STB XSP 3020	10 to 7	5 to 11

Final Assembly

The following figure shows the final assembly:

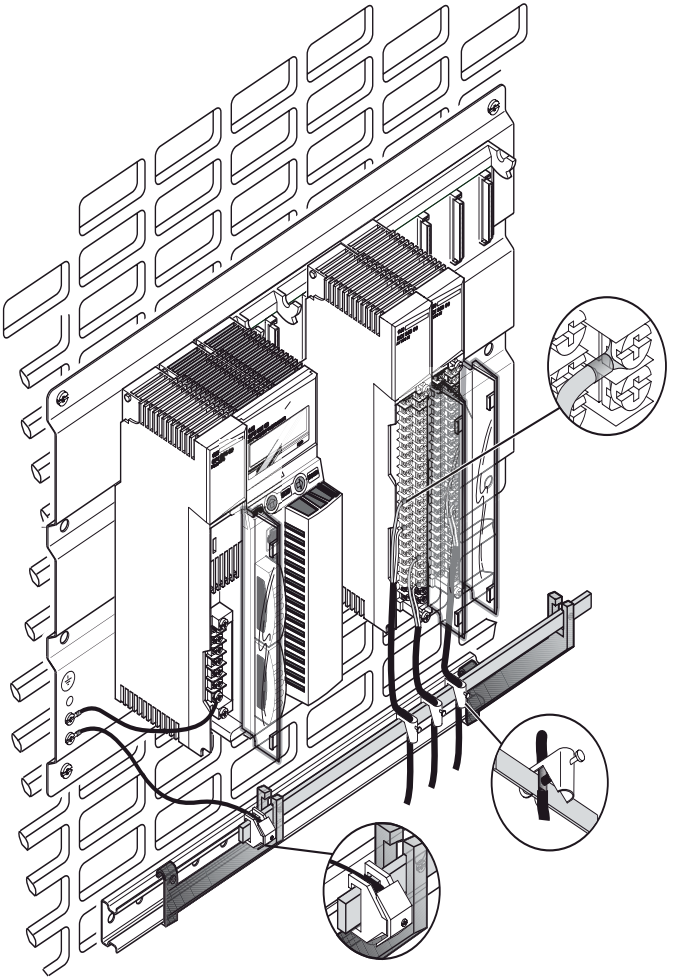

Field Wiring Terminal Strip / Module Keying Assignment

C

Purpose

This appendix provides information on Field Wiring Terminal Strip / Module Keying Assignment of I/O modules

What's in this Chapter?

This chapter contains the following topics:

Topic	Page
General Information	388
Illustration	389
Primary Keying	390
Secondary Keying	392

General Information

Location

Field wiring terminal strips and module housings are slotted on the left and right sides of the PCB card slot to accept keying pins (see *I/O Module Figure, page 389*).

Purpose

To prevent plugging the terminal strip into the wrong module, once wiring connections have been made. Keying is implemented at the discretion of the user.

NOTE: Schneider Electric recommends that module key coding be part of the system installation procedure.

Primary Keying

Primary keying is provided on the right side of the module, marked A through F (top and bottom positions are coded the same). Primary keying provides module class coding. Primary codes have been pre-defined, according to the following tables.

Secondary Keying

Secondary keying is provided on the left side of the module, marked 1 through 6. Secondary keying codes are user-definable and may be used to identify module personality within module classes, or other unique site requirements.

The user may also use personality keying to differentiate between like module types (i.e., 140 DAO 840 00 and 140 DAO 842 10 both have the same primary keying pin combinations), using the white keys for each code.

Illustration

I/O Module Figure

The following figure shows the I/O module and the terminal strip.

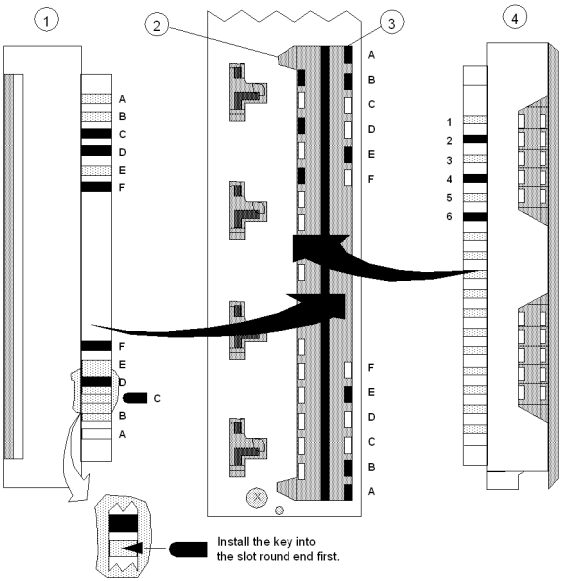

1 Right side of Terminal Strip
2 Secondary Key Slots
3 Primary Key Slots
4 Left side of Terminal Strip

NOTE: The primary / secondary keys shown (in black) in this example reflect the recommended coding of a 24 VDC module in slot 6 to its field wiring terminal strip.

To support keying, I/O modules accepting terminal strips come with 12 customer-installable primary keys (six yellow keys each for the module and terminal strip) and six secondary keys (three white keys each for the module and terminal strip). In the following table, check the Primary Module and Terminal Strip Coding columns for key locations.

To implement the user-optional secondary keying code (designed to help prevent the mismatching of terminal strips to I/O modules of identical type), 17 slot positions have been provided in modules and terminal strips to support a variety of coding schemes.

In addition (by using the secondary keying code), the user may key the field wiring terminal to the position where the module is installed in a rack, using the white keys for each code. To determine a unique module code and terminal strip code, refer to the *Primary Keying Table, page 390*.

Primary Keying

Primary Keying Table

The following table shows the primary module and terminal strip keying for the I/O modules.

Module Class	Module Part Number	Module Coding	Terminal Strip Coding
5 VDC	140 DDI 153 10	ABC	DEF
	140 DDO 153 10		
9 ... 12 VDC	Unassigned	ABD	CEF
24 VDC	140 DDI 353 00	ABE	CDF
	140 DDI 353 10		
	140 DDM 390 00		
	140 DDO 353 00		
	140 DDO 353 10		
	140 HLI 340 00		
	140 SDI 953 00S		
	140 SDO 953 00S		
10 ... 60 VDC	140 DDI 841 00	ABF	CDE
	140 DDI 853 00		
	140 DDO 843 00		
125 VDC	140 DDI 673 00	ACD	BEF
	140 DDM 690 00		
	140 DDO 885 00		
24 VAC	140 DAI 340 00	ACE	BDF
	140 DAI 353 00		
48 VAC	140 DAI 440 00	ACF	BDE
	140 DAI 453 00		
	140 DAO 842 20		
115 VAC	140 DAI 540 00	ADE	BCF
	140 DAI 543 00		
	140 DAI 533 00		
	140 DAM 590 00		
	140 DAO 840 10		

Module Class	Module Part Number	Module Coding	Terminal Strip Coding
230 VAC	140 DAI 740 00	ADF	BCE
	140 DAO 840 00		
	140 DAO 842 10		
	140 DRA 840 00		
Relay	140 DRC 830 00	AEF	BCD
Analog I/O	140 ACI 030 00	BCD	AEF
	140 SAI 940 00S		
	140 AVI 030 00		
	140 ACO 020 00	BCE	ADF
	140 AVO 020 00	BCF	ADE
TC In / RTD / PT100 In	140 ARI 030 10	BDE	ACF
	140 ATI 030 00		
Analog In/Out	140 AMM 090 00	BDF	ACE
Intelligent/ Special Purpose	140 EHC 105 00	BEF	ACD
	140 EHC 202 00		
	Unassigned	CDE	ABF
	Unassigned	CDF	ABE
	Unassigned	CEF	ABD
	Unassigned	DEF	ABC

Secondary Keying

Secondary Keying Table

The following table shows the secondary keying and rack positions.

rack Position	Module Coding	Terminal Strip Coding
1	123	456
2	124	356
3	125	346
4	126	345
5	134	256
6	135	246
7	136	245
8	145	236
9	146	235
10	156	234
11	234	156
12	235	146
13	236	145
14	245	136
15	246	135
16	256	134

CableFast Cabling

D

Introduction

This appendix provides information to the CableFast cabling system.

What's in this Chapter?

This chapter contains the following topics:

Topic	Page
General Information	394
140 CFA 040 00 Quantum CableFast Cabling Block	401
140 CFB 032 00 Quantum CableFast Cabling Block	403
140 CFC 032 00 Quantum CableFast Cabling Block	406
140 CFD 032 00 Quantum CableFast Cabling Block	412
140 CFE 032 00 Quantum CableFast Cabling Block	414
140 CFG 016 00 Quantum CableFast Cabling Block	416
140 CFH 008 00 Quantum CableFast Cabling Block	421
140CFI00800 Quantum CableFast Cabling Block	425
140CFJ00400 Quantum CableFast Cabling Block	429
140CFK00400 Quantum CableFast Cabling Block	433
CableFast Cables	437
CableFast Accessories	442

General Information

Overview

The CableFast wiring system consists of pre-wired Quantum field wiring terminal strips in various cable lengths, terminated with D-type connectors. The D connectors plug into DIN rail-mounted terminal blocks offered in straight-through or special application versions. Cables and terminal blocks are ordered separately. Terminal blocks may be used with any cable length. Pigtail cable versions are also available.

Quantum I/O Modules with CableFast Components

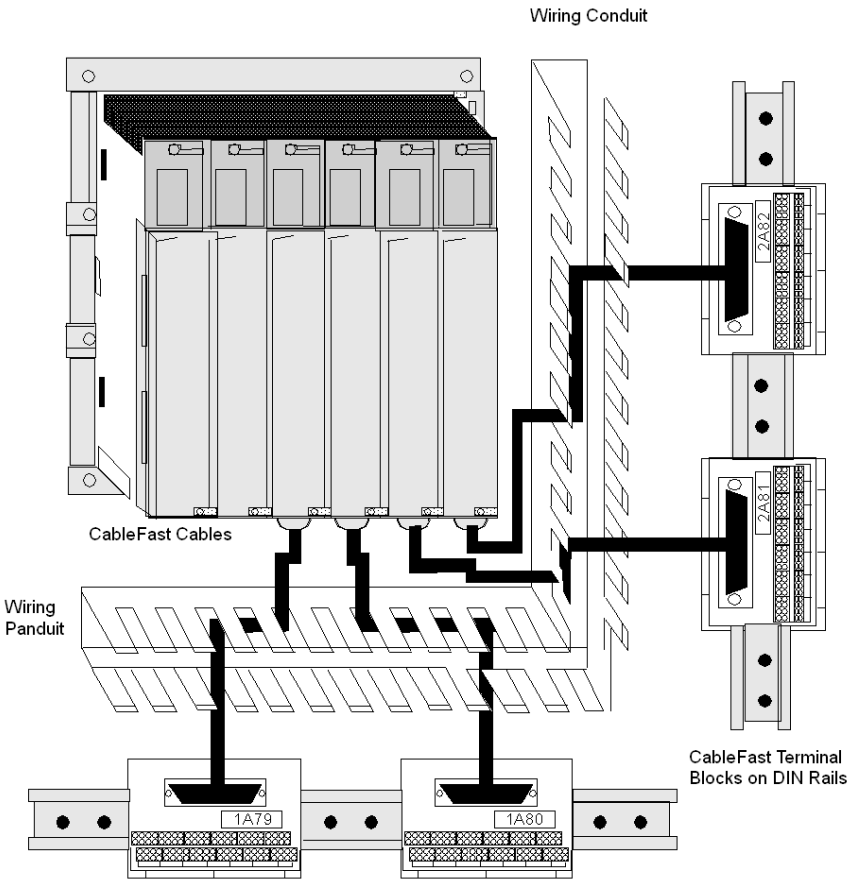

NOTE: Make sure that the wiring conduits are large enough to support 3.65 m (12 ft) cables.

CableFast System Specifications

Power ratings	150 VAC/VDC @ 0.5 A/point	
	150 VAC/VDC @ 2.0 A/point *	
	* Requires the 140 CFG 016 00 terminal block and the 140 XTS 012 •• cable	
Dielectric withstanding voltage	1060 VAC and 1500 VDC	
Creepage and clearance	per IEC 1131, UL 508, CSA 22.2 #142-1987	
Terminal block wire size/terminal	One wire	2.5 mm^2 (12 AWG)
	Two wires)	1.0 mm^2 (6 AWG) and above (See below for the maximum number of wires allowed per terminal.
	Note: It is recommended that no more than two wires be used at one time.	
	Wire Size	Number of Wires
	#24	4
	#22	4
	#18	3
	#16	2
	#14	1
	#12	1
Terminal screw	size	M3
	screwdriver head size	3.3 mm (0.13 in) flat head min.
	screw type	Captive
	screw finish	Tin plate (197 micro in min.)
	torque	0.8 Nm (7.2 lb-in)
System flammability rating	94 V-2	
Temperature	Operating	0 ... 60 °C (32 ... 140 °F)
	Storage	-40 ... +65 °C (-40 ... +149 °F)
Humidity	0 ... 95% RH noncondensing	
Altitude	6,666 ft. (2000 m) full operation	
Shock	+/-15 g peak, 11 ms, half sine wave	
Vibration	10 ... 57 Hz @ 0.075 mm displacement	
	57 ... 150 Hz @ 1 g, total 10 sweeps	
Mounting configuration	DIN rail mount, NS35/7.5 and NS32	

Terminal Block Selection Guide

	140 CFA 040 00	**140 CFB 032 00**	**140 CFC 032 00**	**140 CFD 004 00**	**140 CFE 032 00**	**140 CFG 016 00**	**140 CFH 008 00**	**140 CFI 008 00**	**140 CFJ 004 00**	**140 CFK 004 00**
140 ACI 030 00	X						X	X		
140 ACO 020 00	X								X	X
140 ACI 040 00	X									
140 ACO 130 00	X									
140 ARI 030 10	X									
140 ATI 030 00	X (see note 3)									
140 AMM 090 00	X									
14 AVI 030 00	X						X	X		
140 AVO 020 00	X									X
140 DAI 340 00	X					X				
140 DAI 353 00	X	X	X	X						
140 DAI 440 00	X					X				
140 DAI 453 00	X	X	X	X						
140 DAI 540 00	X					X				
140 DAI 543 00	X									
140 DAI 553 00	X	X	X	X						
140 DAI 740 00	CableFast not allowed									
140 DAI 753 00										
140 DAM 590 00	X see note 1									
140 DAO 840 00	–					X (see note 2				
140 DAO 840 10						X (see note 2				
140 DAO 842 10	–					X (see note 2				

	140 CFA 040 00	**140 CFB 032 00**	**140 CFC 032 00**	**140 CFD 004 00**	**140 CFE 032 00**	**140 CFG 016 00**	**140 CFH 008 00**	**140 CFI 008 00**	**140 CFJ 004 00**	**140 CFK 004 00**
140 DAO 842 20	–					X (see note 2				
140 DAO 853 00	X see note 1									
140 DDI 153 10	X		X							
140 DDI 364 00	not compatible with cable fast. See in the related chapter of the I/O reference guide for recommended cables									
140 DDI 353 00	X	X	X							
140 DDI 353 10	X									
140 DDI 673 00	X									
140 DDI 841 00	X									
140 DDI 853 00	X	X	X	X						
140 DDM 390 00	X									
140 DDM 690 00	X see note 1									
140 DDO 153 10	X									
140 DDO 353 00	X		X		X					
140 DDO 353 01	X		X		X					
140 DDO 353 10	X									
140 DDO 364 00	not compatible with cable fast. See in the related chapter of the I/O reference guide for recommended cables									
140 DDO 843 00						X see note 2				
140 DDO 885 00	X see note 1									
140 DRA 840 00	X see note 1									
140 DRC 830 00	X see note 1									
140 DSI 353 00	X									
140 DVO 853 00	X									

	140 CFA 040 00	140 CFB 032 00	140 CFC 032 00	140 CFD 004 00	140 CFE 032 00	140 CFG 016 00	140 CFH 008 00	140 CFI 008 00	140 CFJ 004 00	140 CFK 004 00
140 SAI 940 00S	not compatible with cable fast.									
140 SDI 953 00S	X									
140 SDO 953 00S	X									
X = Valid Selections.										

NOTE: These are the maximum load current capacities of the 140 CFA 040 00 and 140 CFG 016 00:

1. When using the 140 CFA 040 00 terminal block, the indicated module outputs are limited to 0.5 A/point @ 150 VAC maximum and 0.5 A/point @ 150 VDC maximum.

2. When using the 140 CFG 016 00 terminal block and either the 140 XTS 012 •• or 140 XTS 102 •• high power cable, the indicated module output ratings are 2 A per point, 150 VAC maximum and 2 A per point, 150 VDC maximum.

3. The 140 CFA 040 00 block does not incorporate an isometric barrier and is not recommended for use with 140 ATI 030 00 TC module. Without such a barrier, temperature readings may vary up to 2 degrees from one end of the block to the other. If the application can tolerate this temperature difference, the block (and module) remote CJC may be used.

CableFast Terminal Blocks

The following includes descriptions for the terminal blocks discussed in this Appendix.

This table includes descriptions for the following terminal blocks.

Block Number	Block Description
140 CFA 040 00	The A block is a straight through point to point connection on the terminal block. Wiring of this block is identical to wiring the Quantum I/O connector (140 XTS 002 00).
140 CFB 032 00	The B block is used for individually fused 2-wire digital inputs. This terminal block is designed to help prevent a single point error from affecting the remaining inputs. It is not recommended for 1-wire inputs powered from the field.
140 CFC 032 00	The C block provides connection for 32 group fused input or output points. The block may be used for 1- or 2-wire inputs or outputs, and features a fuse per group, four groups total. Users select input or output mode via four switches located on the module. (The default is input mode.)
140 CFD 032 00	The D block is used for sensors requiring either 2- or 3-wire electrical interface. A fuse per group is supplied to accommodate the I/O module (4) groups.

Block Number	Block Description
140 CFE 032 00	The E block provides connection for 32 individually fused 24 VDC outputs. 1- and 2-wire interfacing may be selected. Field power must be supplied to the four groups.
140 CFG 016 00	The G block is a high power output block used on both AC and DC circuits requiring up to 2 A. Individual fusing is provided and may be used in both 1- and 2-wire installations. It is also used for isolated AC modules.
140 CFH 008 00	The H block is used for analog inputs, with individual fusing provided per channel. This interface provides plus, minus, shield, and power supply interface for both field and loop power configurations.
140 CFI 008 00	The I block is used for analog inputs. This interface provides plus, minus, shield, and power supply interface for both field and loop power configurations.
140 CFJ 004 00	The J block is used for analog outputs, with individual fusing provided per channel. This interface provides plus, minus, shield, and power supply interface for both field and loop power configurations.
140 CFK 004 00	The K block is used for analog outputs. This interface provides plus, minus, shield, and power supply interface for both field and loop power configurations.

CableFast Terminal Block Features

CableFast terminal blocks have the following features.

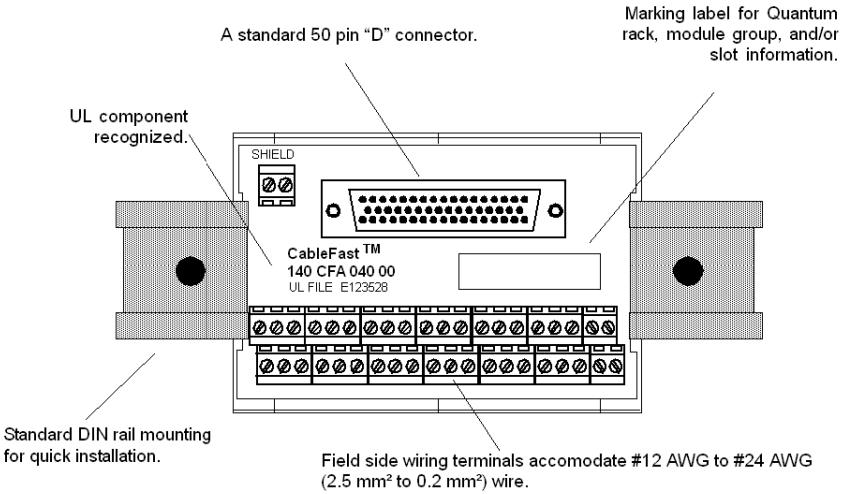

CableFast Terminal Block Stacking Convention

The following figure and table show the stacking convention used by CableFast terminal blocks.

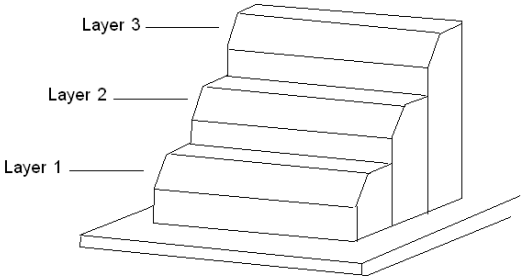

Table of Stacking Convention

Signal			Layer 3
Positive	Signal	Signal	Layer 2
Negative	Positive	Negative	Layer 1

140 CFA 040 00 Quantum CableFast Cabling Block

Overview

The A block is a straight-through point-to-point connection on the terminal block. Wiring this block (and other CableFast cabling blocks) is identical to wiring the Quantum I/O connector (140 XTS 002 00).

140 CFA 040 00 Terminal Block

The following terminal block is unique to the 140 CFA 040 00 module.

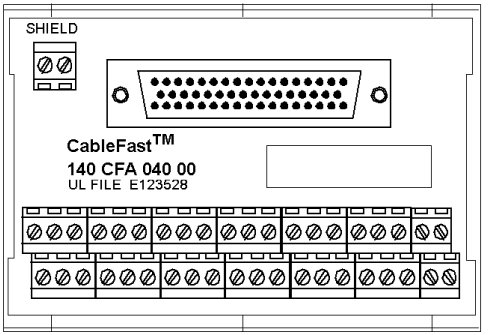

Application Notes

The following are the application notes for the 140 CFA 040 00 terminal block.

1. **Configuration** – two columns
2. **Compatibility** – this terminal block provides straight through (point-to-point) connection.

NOTE: You may use this terminal block with Quantum I/O modules except the 140 ATI 030 00 thermocouple module.

140 CFA 040 00 Dimensions

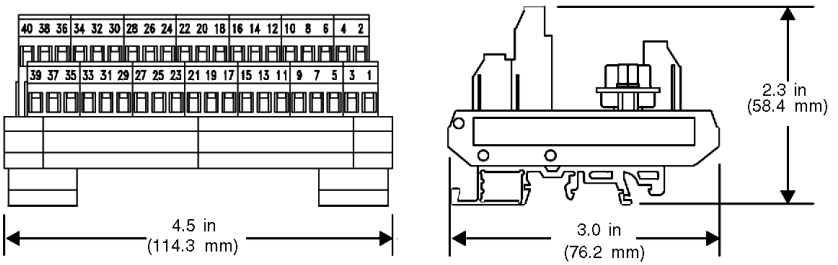

140 CFA 040 00 Wiring Diagram

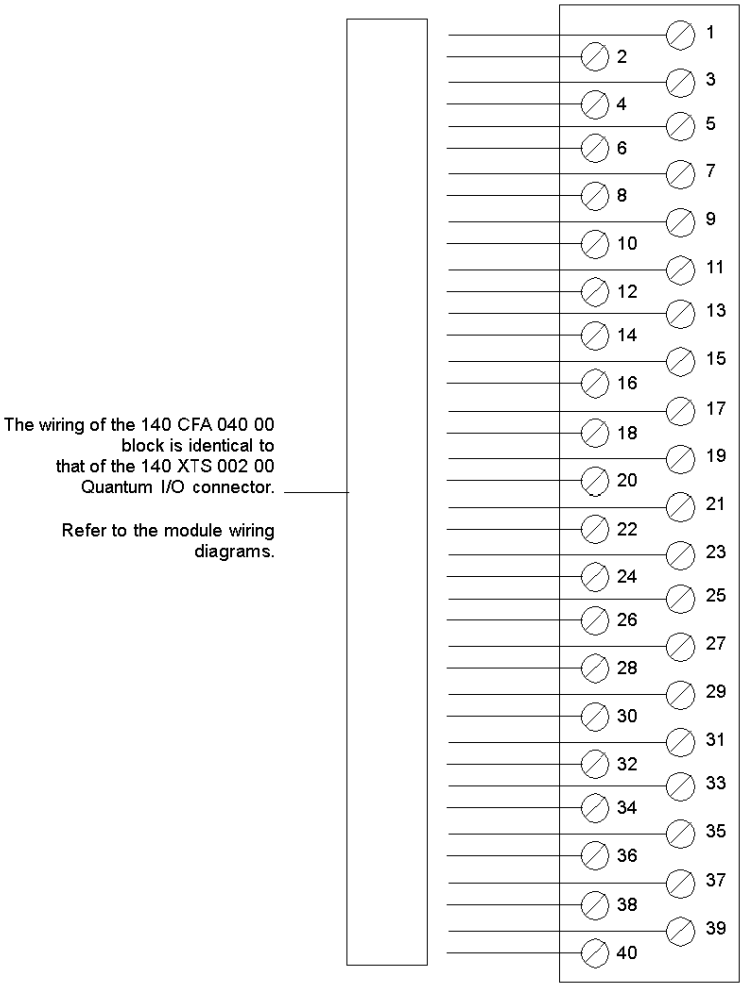

140 CFB 032 00 Quantum CableFast Cabling Block

Overview

The B block is used for individually fused 2-wire digital inputs. This CableFast terminal block is designed to help prevent a single point error from affecting the remaining inputs. It is not recommended for sourced 1-wire inputs (powered from the field).

Terminal Block

The following figure shows the terminal block for the 140 CFB 032 00 module.

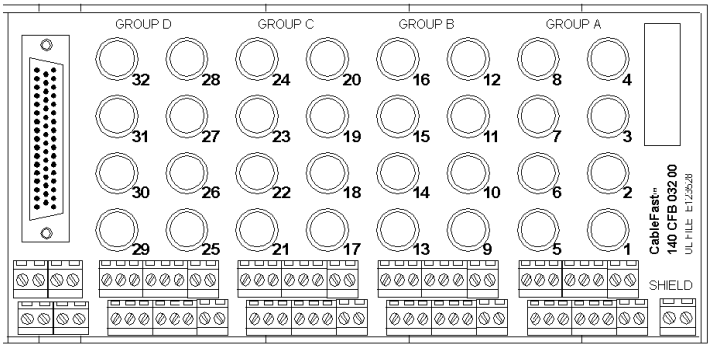

Application Notes

The following are the application notes for the 140 CFB 0320 0 terminal block.

1. **Configuration** – arranged in four groups of eight I/O points. Two terminals per point help prevent disruption of service due to a single point error.
2. **Compatibility** – this terminal block provides individual 32 point 0.8 A fusing for the following input modules:140 DAI 353 00, 140 DAI 453 00, 140 DAI 553 00, 140 DDO 153 10, 140 DDI 353 00, and 140 DDI 853 00.

Dimensions

The following figures show the dimensions for the 140CFB03200 terminal block.

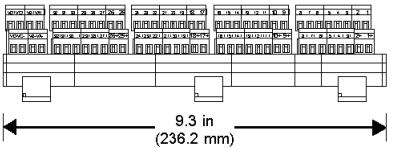

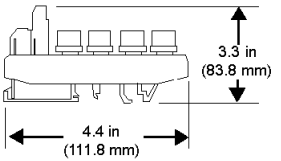

Wiring of Input Modules

The following figure shows the 140 CFB 032 00 wiring for the following input modules: 140 DAI 353 00, 140 DAI 453 00, 140 DAI 553 00, 140 DDI 353 00, and 140 DDI 853 00.

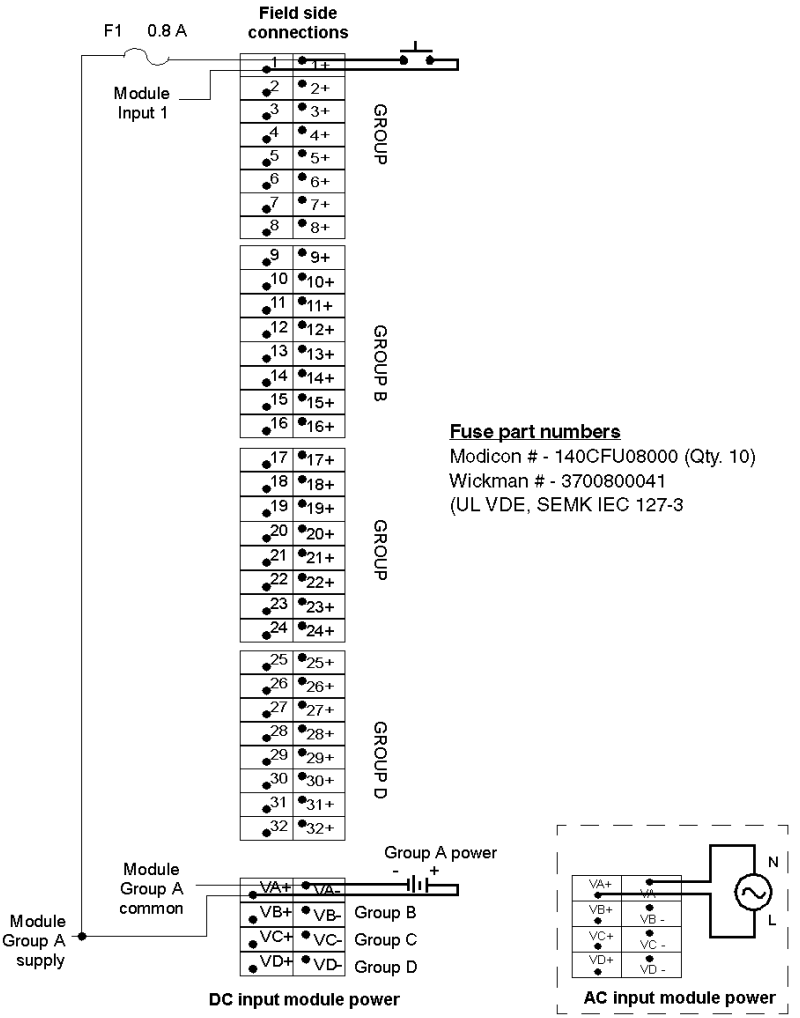

NOTE: The terminal block commoning strip, Modicon # 140 CFX 001 10 (Qty. 10) can be used to jumper the power between groups.

Wiring of Output Module

The following figure shows the 140 CFB 032 00 wiring for the 140 DDO 153 10 output module.

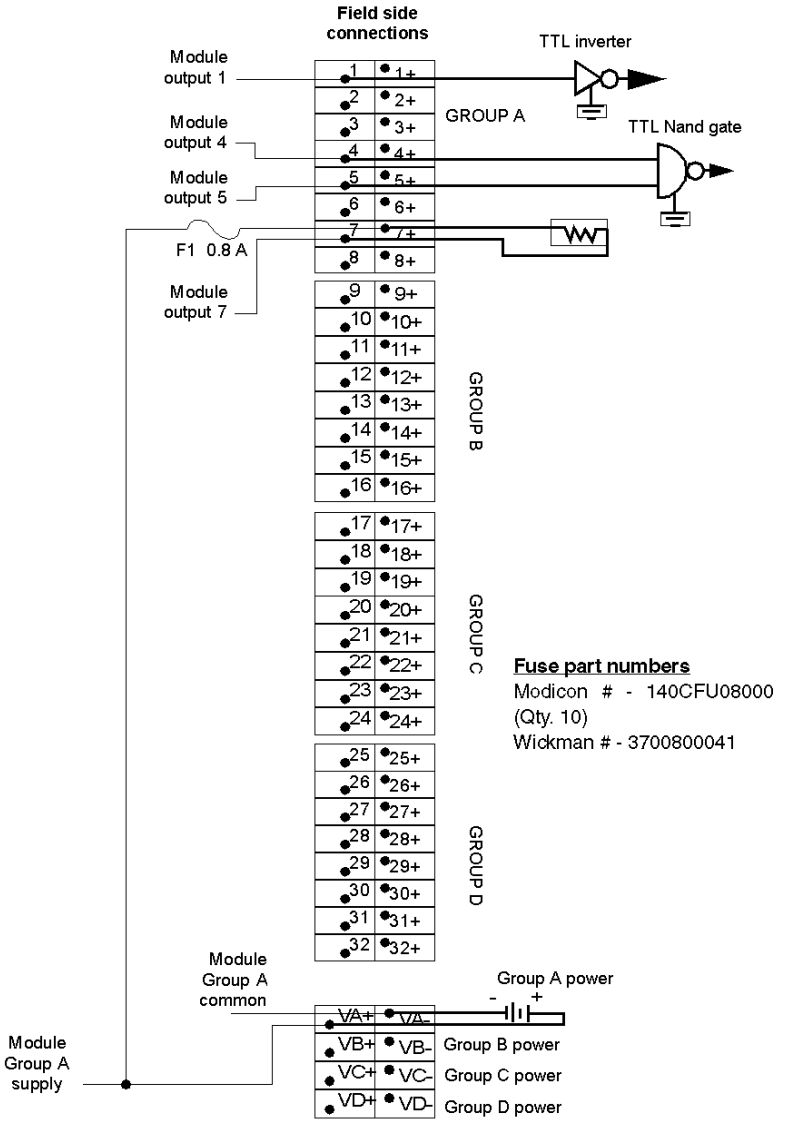

NOTE: The terminal block commoning strip, Modicon # 140 CFX 001 10 (Qty. 10) can be used to jumper the power between groups.

140 CFC 032 00 Quantum CableFast Cabling Block

Overview

The C block provides connections for 32 group fused input or output points. You may use this CableFast terminal block for 1- or 2-wire inputs or outputs, and features a fuse per group – up to a total of four groups. Users select input or output mode via four switches located on the module. (The default is input mode.)

Terminal Block

The following figure shows the terminal block for the 140 CFC 032 00 module.

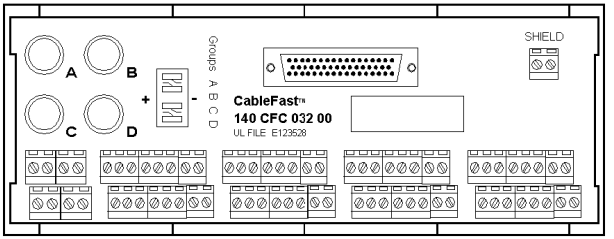

Application Notes

The following are the application notes for the 140 CFC 032 00 module.

1. **Configuration** – arranged in four groups of eight I/O points (two terminals per point). This block may be used for one- and two-wire inputs or outputs. The input and output mode is selected via four switches located on the block.
2. **Compatibility** – this terminal block provides 0.8 A group fusing for the following discrete modules:

The following table shows the modules provided with 0.8 A group fusing.

Module	Mode	Switch setting	Fuse rating
140 DAI 353 00	Input	+	0.8 A
140 DAI 453 00	Input	+	0.8 A
140 DAI 553 00	Input	+	0.8 A
140 DDI 153 10	Input	-	0.8 A
140 DDI 353 00	Input	+	0.8 A
140 DDI 853 00	Input	+	0.8 A
140 DDO 153 10	Output	+	4 A
140 DDO 353 00	Output	-	4 A

NOTE: Select input or output mode with the four switches located on the terminal.

Dimensions

The following figures show the dimensions for the 140 CFC 032 00 terminal block block. All four switches must be set to the same position.

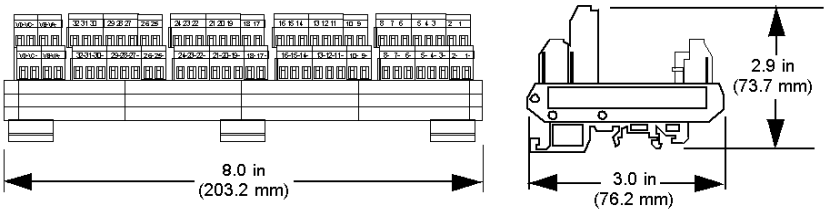

Wiring for Input Modules

The following shows the 140 CFC 032 00 wiring for the following input modules: 140 DAI 353 00, 140 DAI 453 00, 140 DAI 553 00, 140 DDI 353 00, and 140 DDI 853 00.

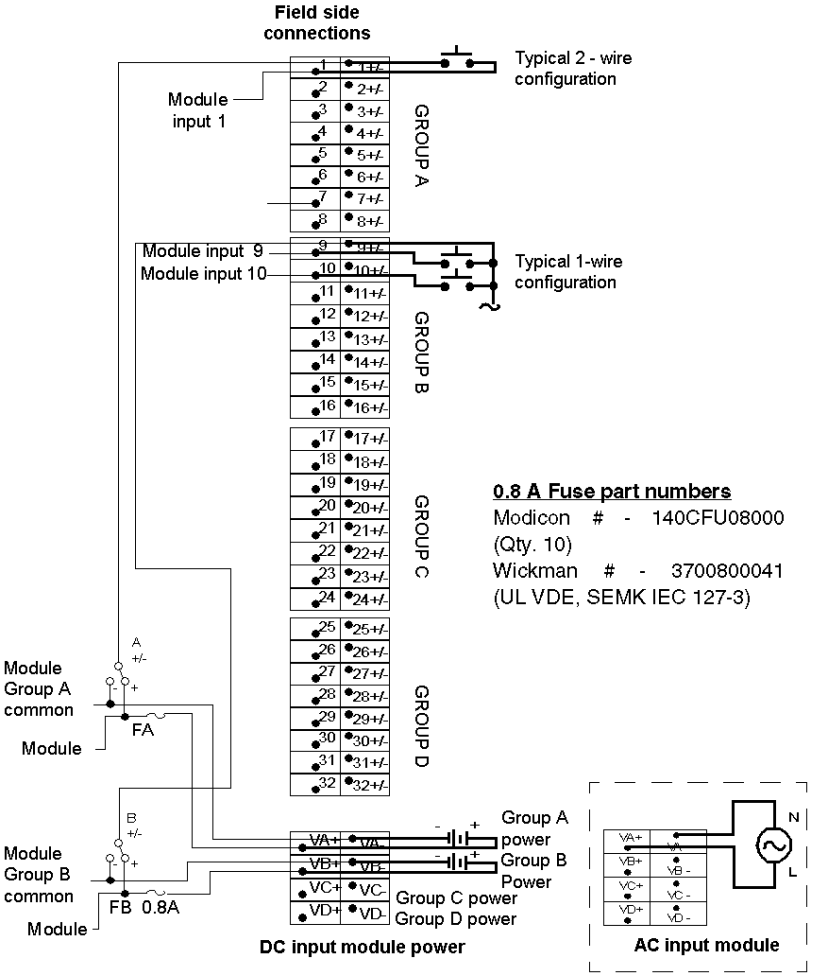

NOTE: The terminal block commoning strip, Modicon # 140 CFX 001 10 (Qty. 10), can be used to jumper the power between groups.

Wiring for 140 DDI 153 10 Input Module

The following figure shows the 140 CFC 032 00 wiring for the 140 DDI 153 10 input module.

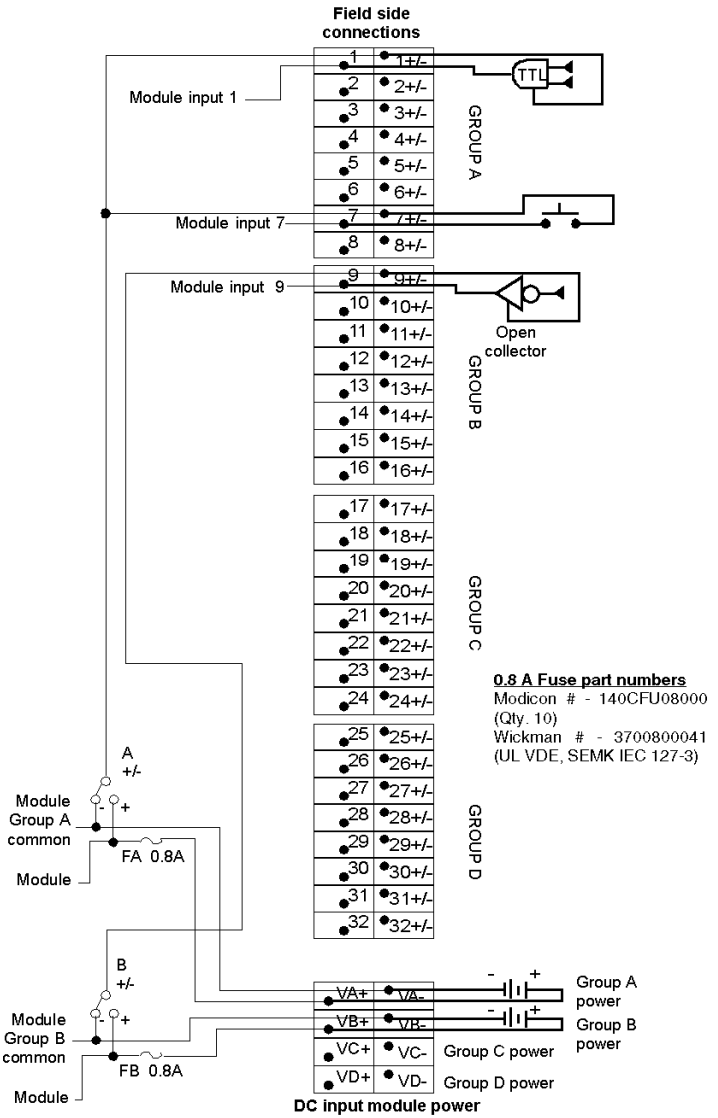

NOTE: The terminal block commoning strip, Modicon # 140 CFX 001 10 (Qty. 10), can be used to jumper the power between groups.

Wiring for 140 DDO 153 10 Output Module

The following figure shows the 140 CFC 032 00 wiring for the 140 DDO 153 10 output module.

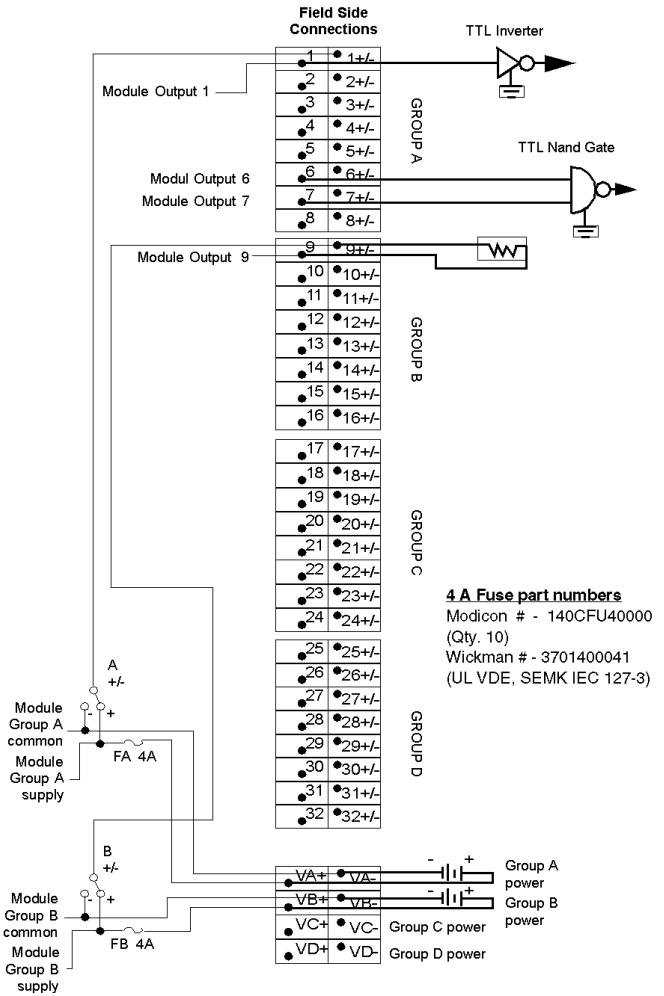

NOTE:

1. The 140 CFC 032 00 is shipped with Modicon the 140 CFU 080 00 (0.8 A) fuse installed. Check that the Modicon 140CFU40000 (4 A) fuse is installed when the 140 CFC 032 00 and the 140 DDO 153 00 are wired together.
2. The terminal block commoning strip, Modicon 140 CFX 001 10 (Qty. 10), can be used to jumper the power between groups.

Wiring for 140 DDO 353 0X Output Module

The following figure shows the 140 CFC 032 00 wiring for the 140 DDO 353 00 and 140 DDO 353 01 output modules.

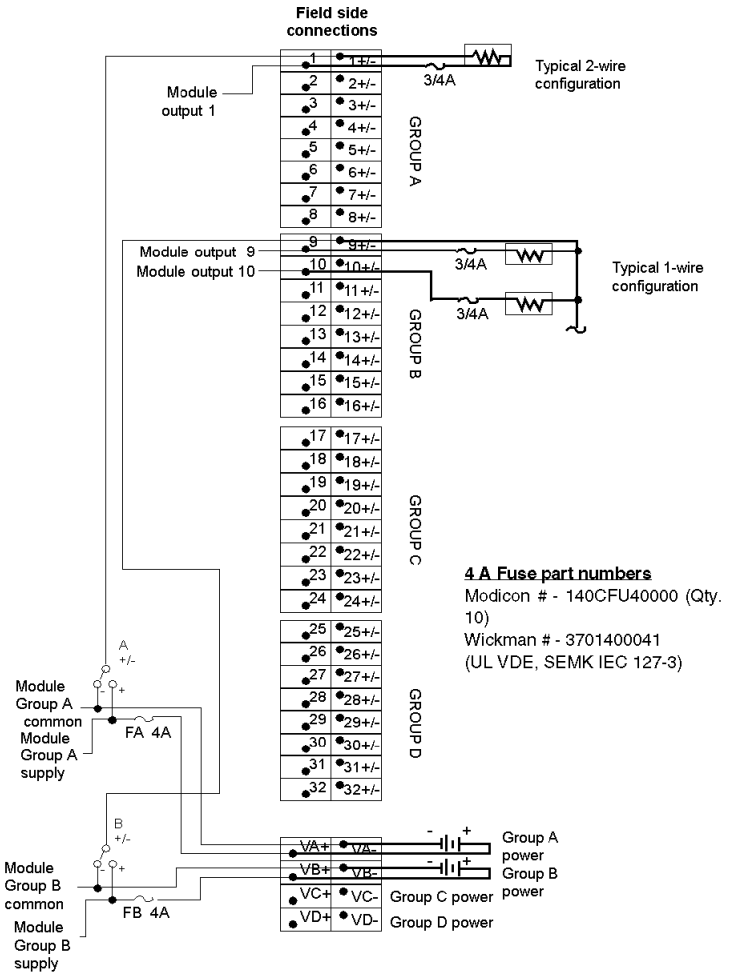

NOTE:

1. The 140 CFC 032 00 is shipped with the Modicon 140 CFU 080 00 (0.8 A) fuse installed. Make sure the Modicon 140 CFU 400 00 (4 A) fuse is installed when the 140 CFC 032 00 and the 140 DDO 353 00 are wired together.
2. The terminal block commoning strip, Modicon 140 CFX 001 10 (Qty. 10), can be used to jumper the power between groups.

140 CFD 032 00 Quantum CableFast Cabling Block

Overview

The CableFast cabling D block is used for sensors requiring either 2- or 3-wire electrical interfaces. A fuse per group is supplied to accommodate the I/O module (4) groups.

Terminal Block

The following figure shows the 140 CFD 032 00 terminal block.

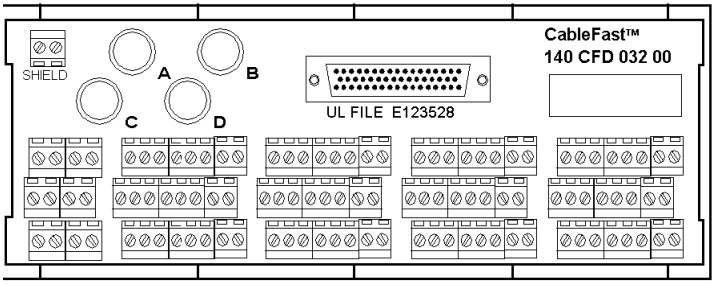

Application Notes

The following are the application notes for the 140 CFD 032 00 module.

1. **Configuration** – arranged in four groups of eight I/O points. Each input is allocated three terminals.
2. **Compatibility** – this terminal block provides 0.8 A group fusing connection points for 3- and 2-wire proximity switches and is used with the following modules: 140 DAI 353 00, 140 DAI 453 00, 140 DAI 553 00, 140 DDI 353 00, and 140 DDI 853 00.

Dimensions

The following shows the dimensions for the 140 CFD 032 00 module.

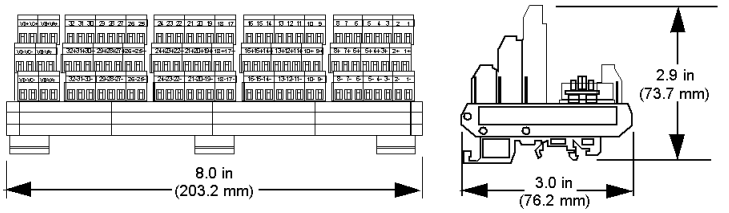

Wiring

The following figure shows the wiring for the 140 CFD 032 00 module.

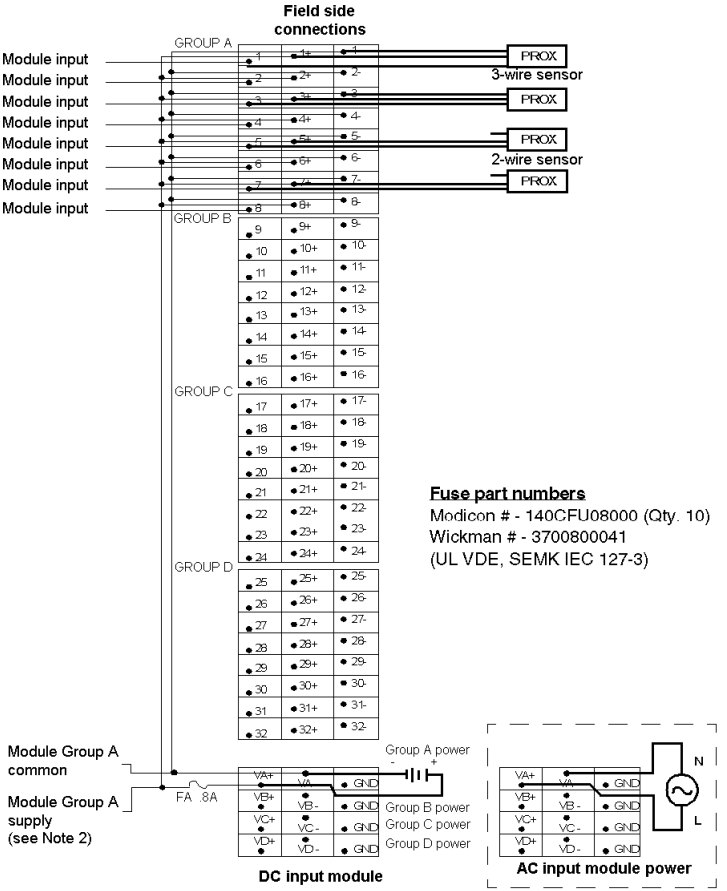

NOTE:

1. The GND (ground) terminal points are not connected.
2. The terminal block commoning strip, Modicon # 140 CFX 001 10 (Qty. 10), can be used to jumper the power between groups.

140 CFE 032 00 Quantum CableFast Cabling Block

Overview

The CableFast E cabling block provides connections for 32 individually fused 24 VDC outputs. 1- and 2-wire interfacing may be selected. Field power must be supplied to the four groups.

Terminal Block

The following figure shows the 140 CFE 032 00 terminal block.

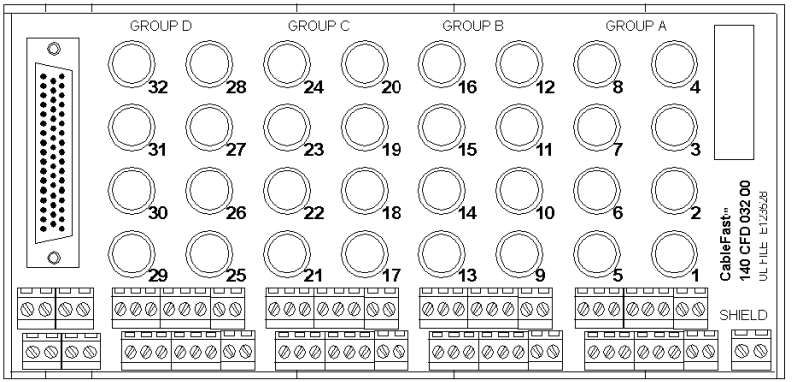

Application Notes

The following are the application notes for the 140 CFE 032 00 module.

1. **Configuration** – arranged in four groups of eight I/O points. Two terminals per point help prevent disruption of service due to a single point error.
2. **Compatibility** – this terminal block provides individual 32-point 0.8 A fusing for the 140 DDO 353 00 and the 140 DDO 353 01 modules.

Dimensions

The following shows the dimensions for the 140 CFE 032 00 module.

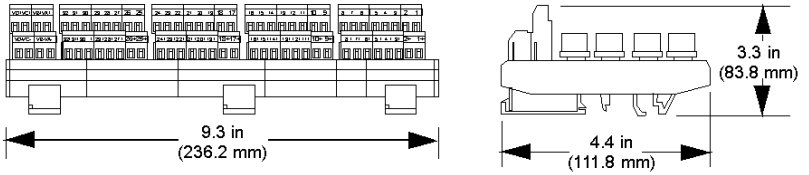

Wiring Diagram

The following figure shows the wiring for the 140 CFE 032 00 module.

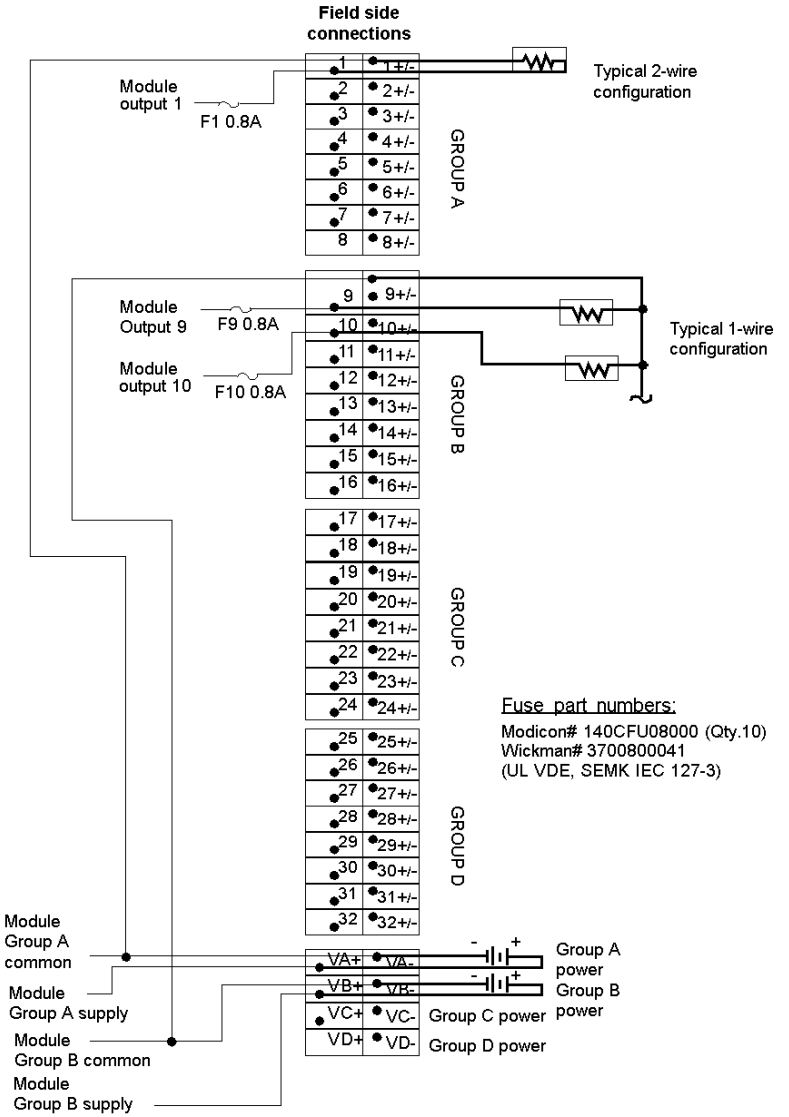

NOTE: The terminal block commoning strip, Modicon # 140 CFX 001 10 (QTY. 10), can be used to jumper the power between groups.

140 CFG 016 00 Quantum CableFast Cabling Block

Overview

The G CableFast cabling block is a high-power output block used on both AC and DC circuits requiring up to 2 A. Individual fusing is provided and may be used in both 1- and 2-wire installations. It is also used for isolated AC modules.

Terminal Block

The following figure shows the 140 CFG 016 00 terminal block.

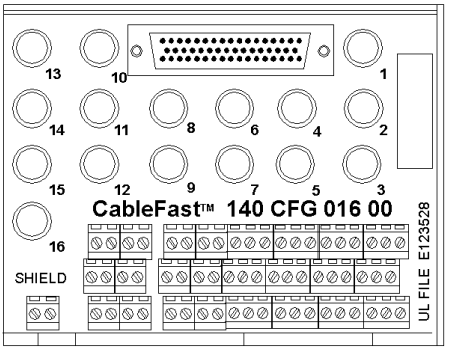

Application Notes

The following are the application notes for the 140 CFG 016 00 module.

1. **Configuration** – Arranged in 16 isolated I/O points.
2. **Compatibility** – This terminal block provides individual 16-point 4 A fused connection points for the following modules: 140 DAI 340 00, 140 DAI 440 00, 140 DAI 540 00, 140 DAO 840 00, 140 DAO 840 10, 140 DAO 842 10, 140 DAO 842 20, and 140 DDO 843 00.

Dimensions

The following figures show the dimensions for the 140 CFG 016 00 module.

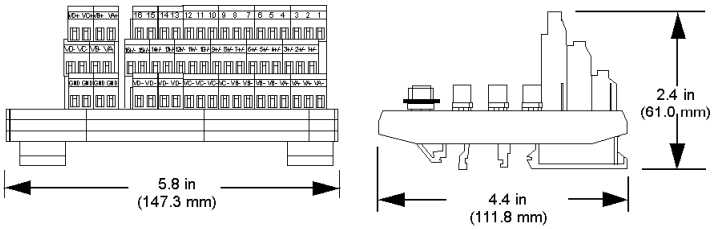

Wiring for Isolated AC Input Mode

The following figure shows the 140 CFG 016 00 wiring for the input (isolated AC input mode) modules: 140 DAI 340 00, 140 DAI 440 00, and 140 DAI 540 00.

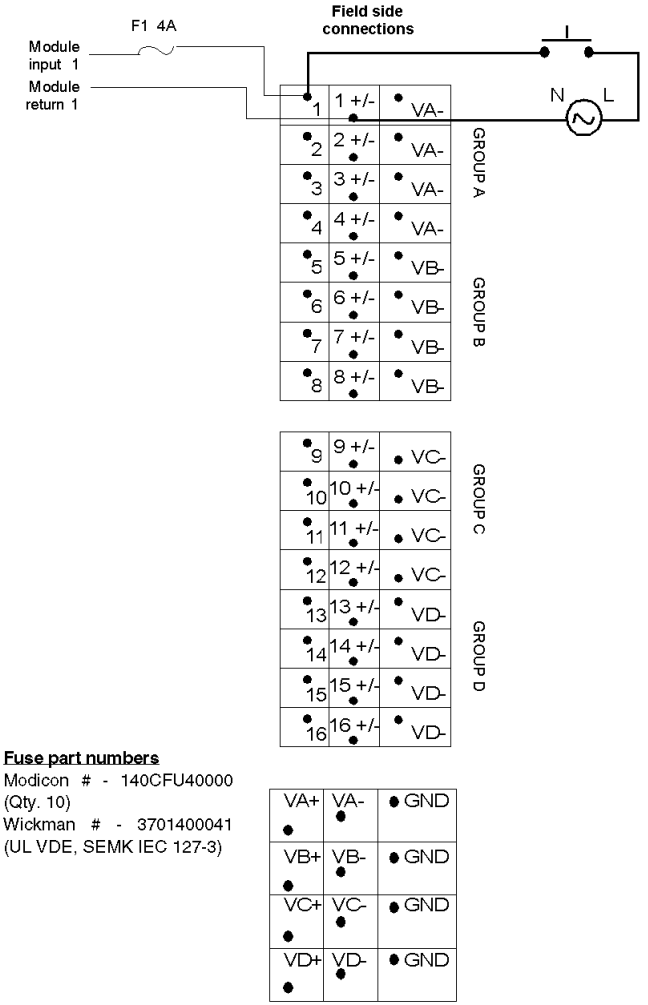

NOTE:

1. The terminal block commoning strip, Modicon # 140 CFX 001 10 (Qty. 10), can be used to jumper the power between groups.
2. The GND (ground) terminal points are not connected.

Wiring for Isolated Output Mode

The following shows the 140 CFG 016 00 wiring for the 140 DAO 840 00 and 140 DAO 840 10 output modules (isolated output mode).

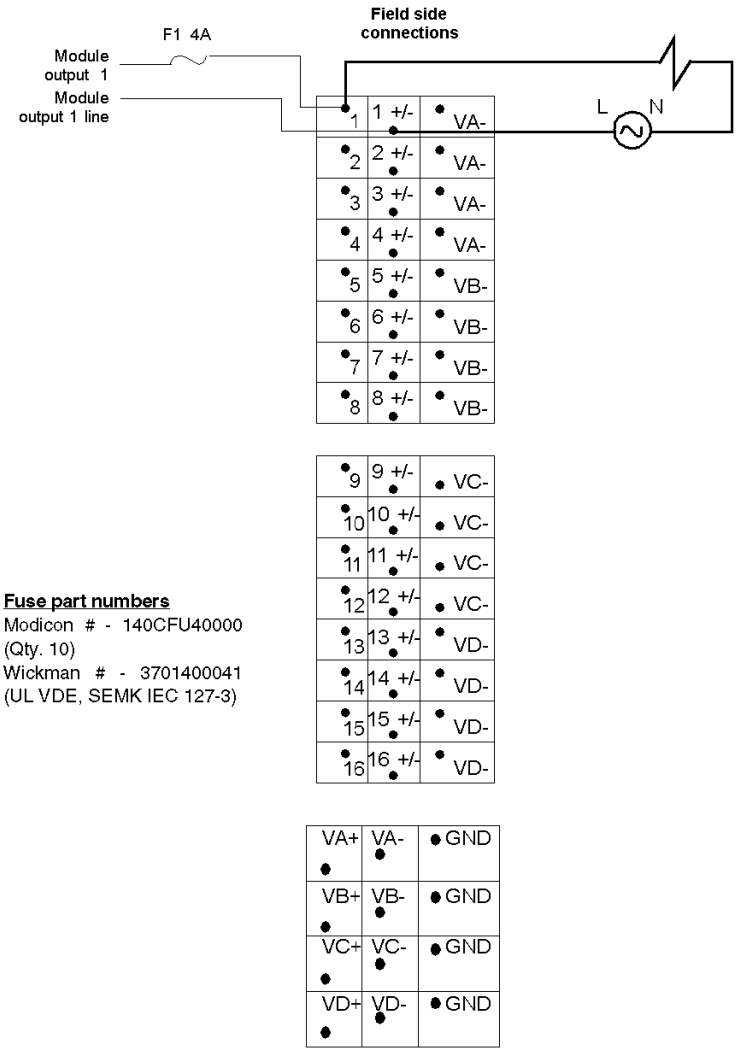

Fuse part numbers
Modicon # - 140CFU40000
(Qty. 10)
Wickman # - 3701400041
(UL VDE, SEMK IEC 127-3)

NOTE:

1. The terminal block commoning strip, Modicon # 140 CFX 001 10 (Qty. 10), can be used to jumper the power between groups.
2. The GND (ground) terminal points are not connected

Wiring for Grouped AC Output Mode

The following figure shows the 140 CFG 016 00 wiring for the 140 DAO 842 10 and 140 DAO 842 20 output modules (grouped AC output mode).

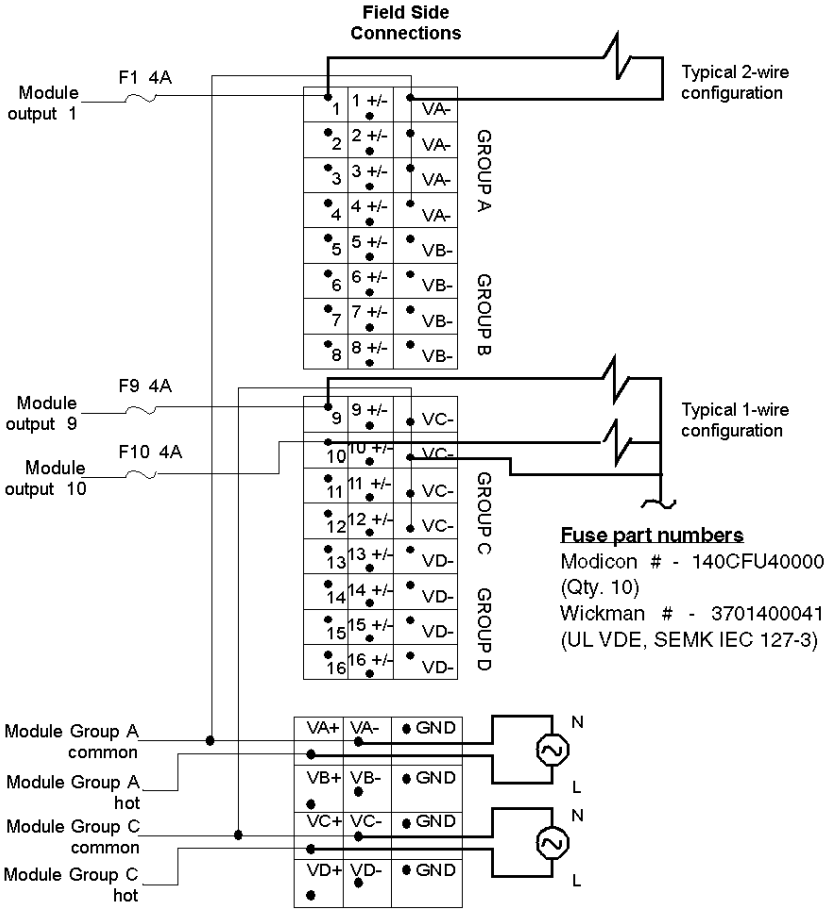

NOTE:

1. The terminal block commoning strip, Modicon # 140 CFX 001 10 (Qty. 10), can be used to jumper the power between groups.
2. The GND (ground) terminal points are not connected.

Wiring for Grouped DC Output Mode

The following figure shows the 140 CFG 016 00 wiring for the 140 DDO 843 00 (grouped DC output mode) module.

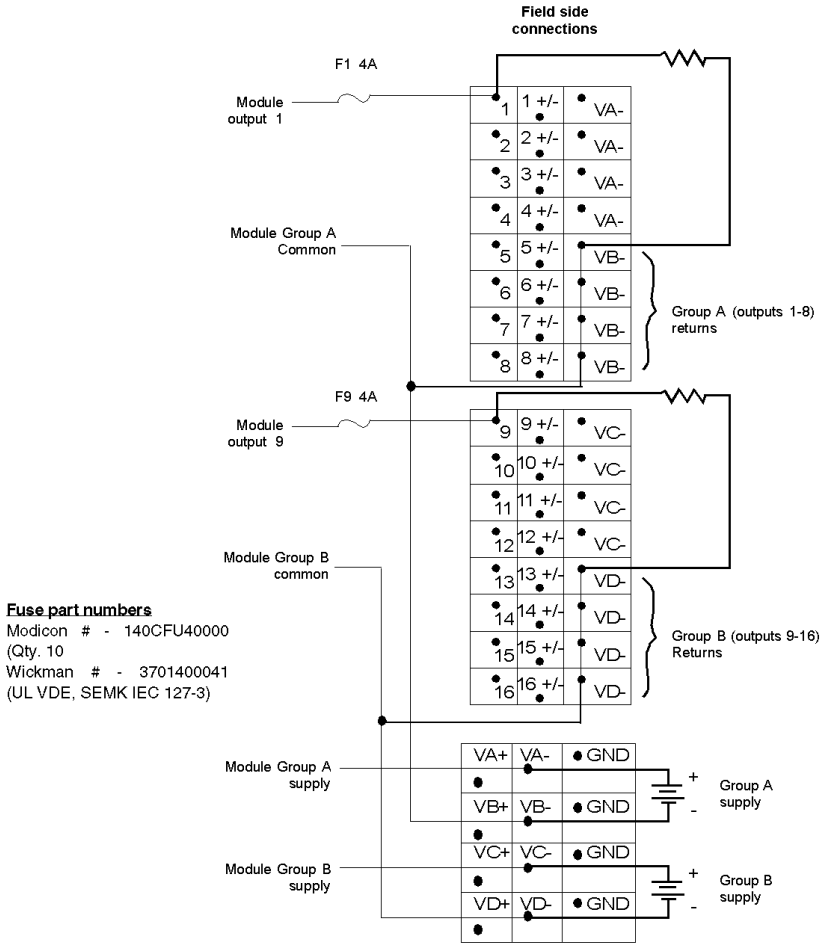

NOTE:

1. The terminal block commoning strip, Modicon # 140 CFX 001 10 (Qty. 10), can be used to jumper the power between groups.
2. The GND (ground) terminal points are not connected.

140 CFH 008 00 Quantum CableFast Cabling Block

Overview

The H CableFast cabling block is used for analog inputs, with individual fusing provided per channel. This interface provides plus, minus, shield, and power supply interface for both field and loop power configurations.

Terminal Block

The following figure shows the 140 CFH 008 00 terminal block.

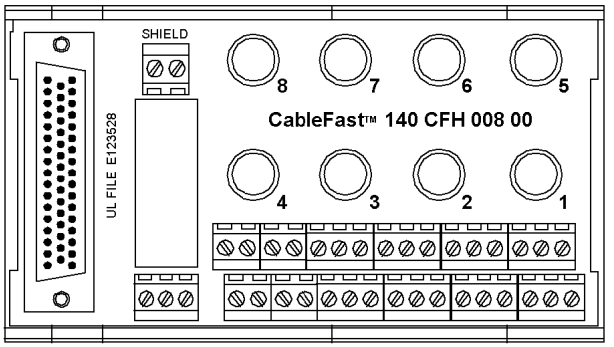

Application Notes

The following are the application notes for the 140 CFH 008 00 module.

1. **Configuration** – eight analog inputs with a common loop supply. Each point is allocated four terminals.
2. **Compatibility** – this terminal block provides individually 0.063 A fused connection point sets for the 140 ACI 030 00 and 140 AVI 030 00 analog input modules.

Dimensions

The following figures show the dimensions for the 140 CFH 008 00 module.

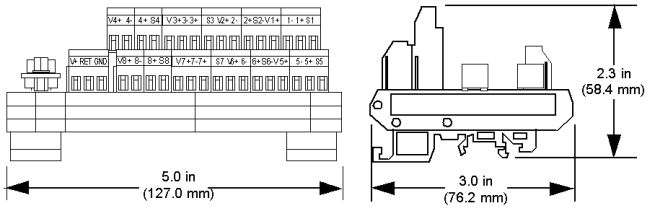

Wiring Diagram (Source Grounding)

The following figure shows the wiring for the 140 CFH 008 00 (source grounding) module.

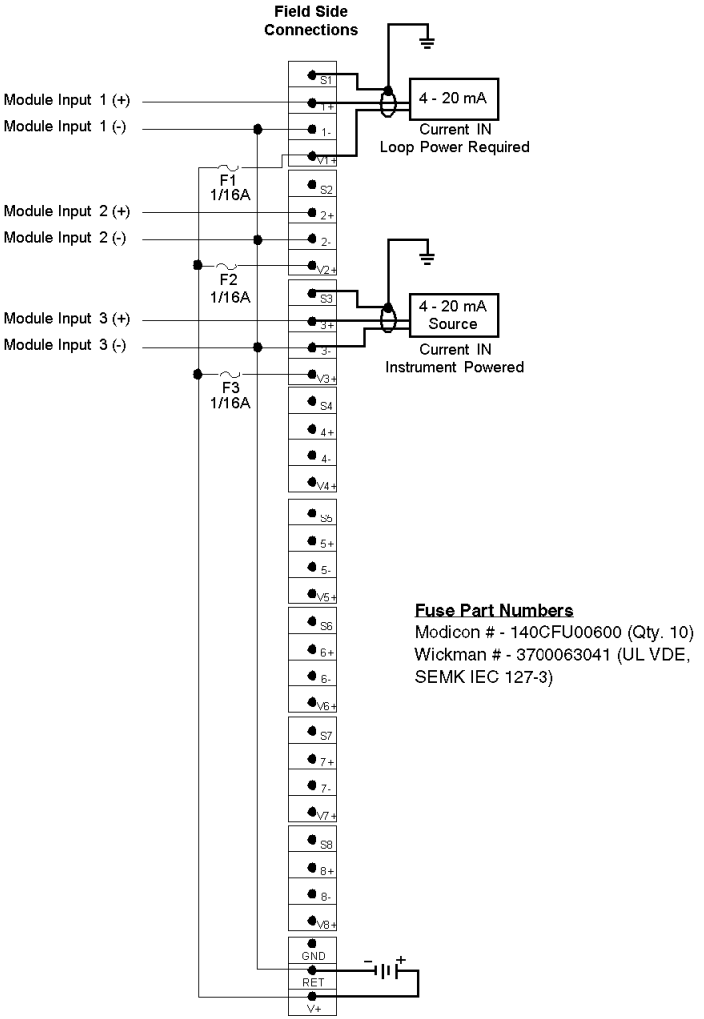

NOTE:

1. When using a single power supply, there will be no channel-to-channel isolation of input points.
2. For the required jumper options for the 140 ACI 030 00 and the 140 AVI 030 00, see the wiring diagrams for said modules.
3. The GND (ground) terminal point is not connected.

Wiring Diagram (Instrument Grounding)

The following figure shows the wiring (instrument grounding) for the 140 CFH 008 00 module.

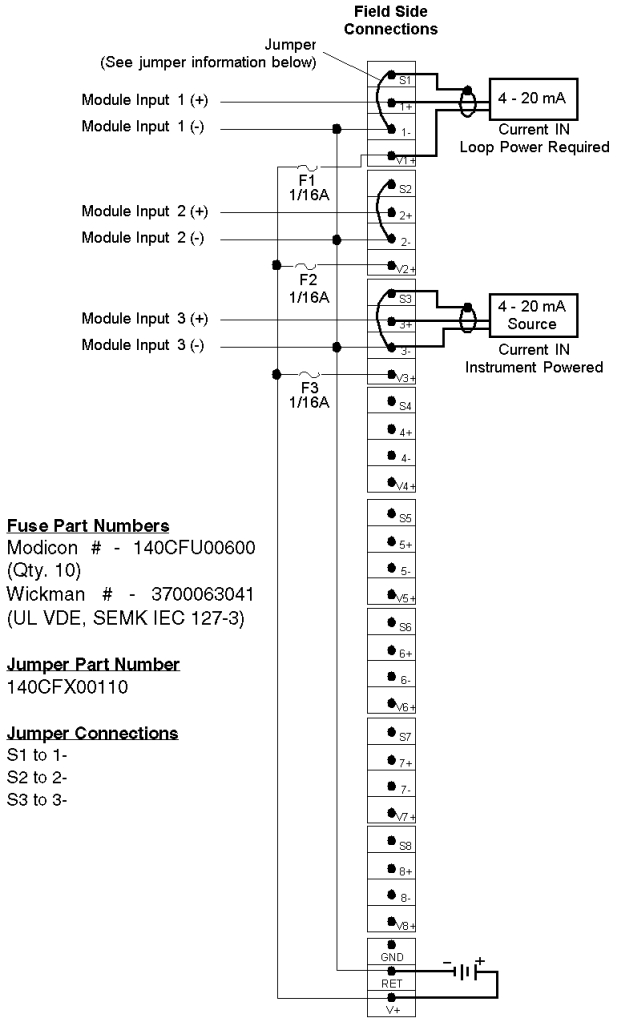

NOTE:

- If you use a single power supply, there will be no channel-to-channel isolation of the input points.
- For the required jumper options for the 140 ACI 030 00 and the 140 AVI 030 00, see the wiring diagrams for said modules.
- The GND (ground) terminal point is not connected.

Wiring Diagram (Chassis Grounding)

The following figure shows the wiring (chassis grounding) for the 140 CFH 008 00 module.

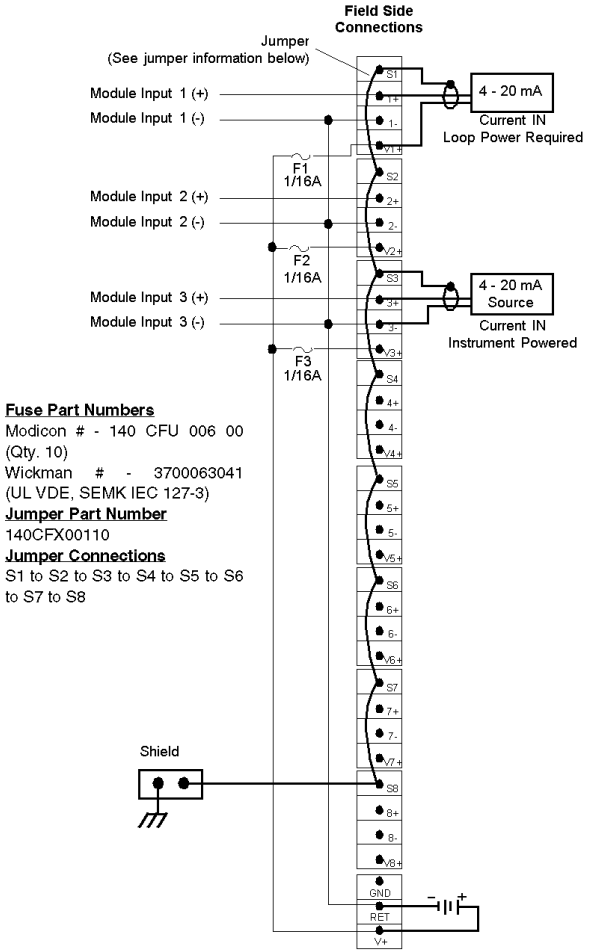

NOTE:

1. When using a single power supply, there will be no channel-to-channel isolation of input points.
2. For the required jumper options for the 140 ACI 030 00 and the 140 AVI 030 00, see the wiring diagrams for said modules.
3. The GND (ground) terminal point is not connected.

140CFI00800 Quantum CableFast Cabling Block

Overview

The I block is used for analog inputs. This interface provides plus, minus, shield, and power supply interfaces for both field and loop power configurations.

See Common Features of the CableFast Cabling System *(see Modicon Quantum, Automation Series, Hardware Reference Guide)* for information on common specifications and features of CableFast cabling blocks.

Application Notes

The following are the application notes for the 140CFI00800 module.

1. **Configuration** – Eight analog inputs with a common loop supply. Each point is allocated four terminals.
2. **Compatibility** – This terminal block provides eight connection point sets for the 140ACI03000 and 140AVI03000 analog input modules.

Dimensions

The following figures show the dimensions for the 140CFI00800 module.

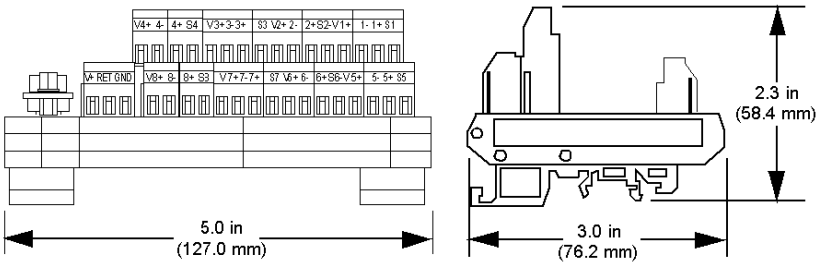

Wiring Diagram (Source Grounding)

The following figure shows the wiring for the140CFI00800 (source grounding) module.

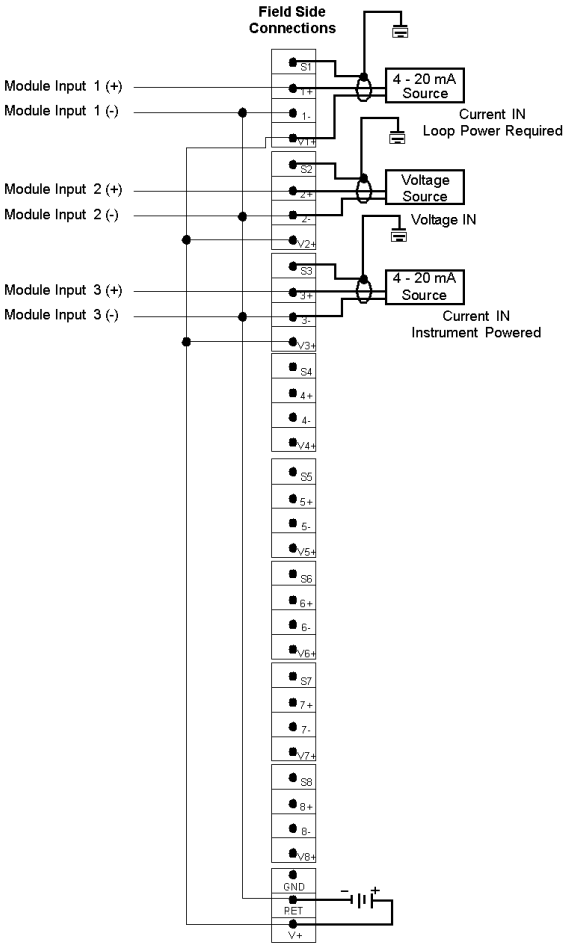

NOTE:

1. When using a single power supply, there will be no channel-to-channel isolation of input points.
2. For the required jumper options for the 140ACI03000 and the 140AVI03000, see the wiring diagrams in ACI03000 I/O Module *(see Modicon Quantum, Automation Series, Hardware Reference Guide)* and AVI03000 I/O Module *(see Modicon, A120 Series I/O Modules, User Guide)* .
3. The GND (ground) terminal point is not connected.

Wiring Diagram (Instrument Grounding)

The following figure shows the wiring for the140CFI00800 (instrument grounding) module.

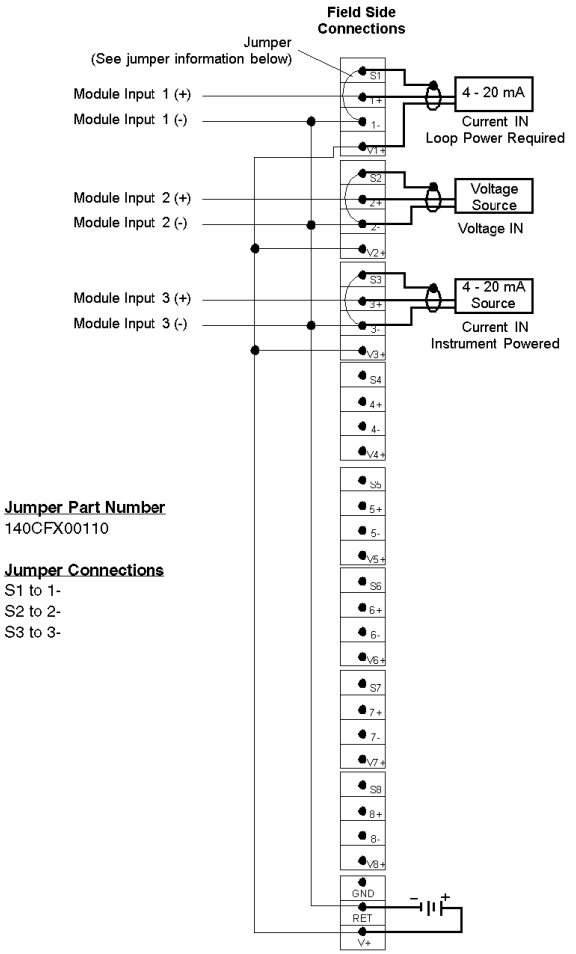

NOTE:

1. When using a single power supply, there will be no channel-to-channel isolation of input points.
2. For the required jumper options for the 140ACI03000 and the 140AVI03000, see the wiring diagrams in ACI03000 I/O Module *(see Modicon Quantum, Automation Series, Hardware Reference Guide)* and AVI03000 I/O Module *(see Modicon, A120 Series I/O Modules, User Guide)*..
3. The GND (ground) terminal point is not connected.

Wiring Diagram (Chassis Grounding)

The following figure shows the wiring for the 140CFI00800 (chassis grounding) module.

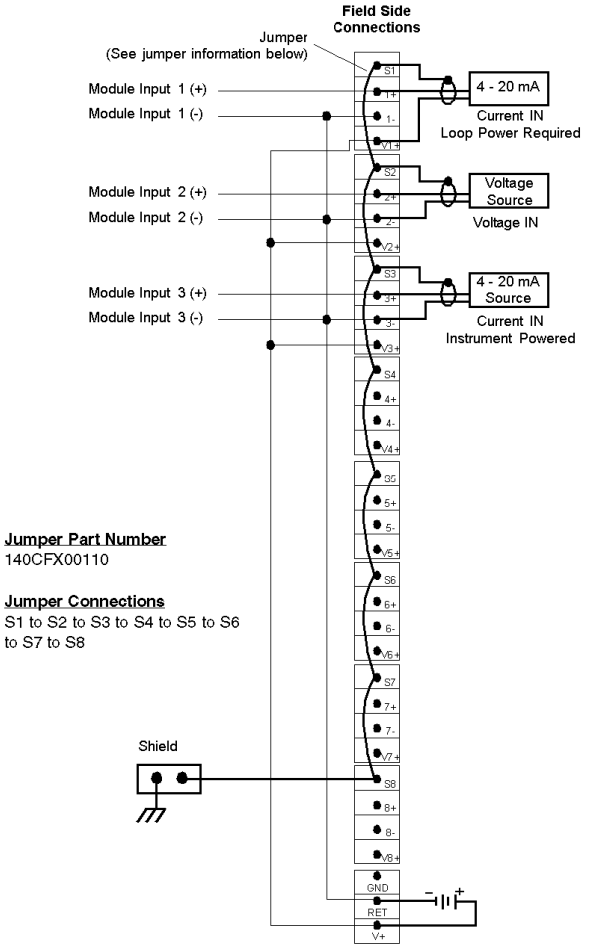

NOTE:

1. When using a single power supply, there will be no channel-to-channel isolation of input points.
2. For the required jumper options for the 140ACI03000 and the 140AVI03000, see the wiring diagrams in ACI03000 I/O Module *(see Modicon Quantum, Automation Series, Hardware Reference Guide)* and AVI03000 I/O Module *(see Modicon, A120 Series I/O Modules, User Guide)* .
3. The GND (ground) terminal point is not connected.

140CFJ00400 Quantum CableFast Cabling Block

Overview

The J block is used for analog outputs, with individual fusing provided per channel. This interface provides plus, minus, shield, and power supply interfaces for both field and loop power configurations.

See Common Features of the CableFast Cabling System *(see Modicon Quantum, Automation Series, Hardware Reference Guide)* for information on common specifications and features of CableFast cabling blocks.

Terminal Block

The following figure shows the 140CFJ00400 terminal block.

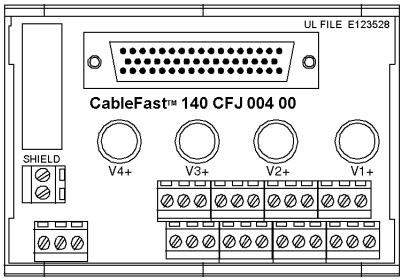

Application Notes

The following are the application notes for the 140CFJ00400 module.

1. **Configuration** – Four analog outputs with a common loop supply. Each point is allocated six terminals.
2. **Compatibility** – This terminal block provides four individually 0.063 A fused connection point sets for the 140ACO02000 analog output module.

Dimensions

The following figures show the dimensions for the 140CFJ00400 module.

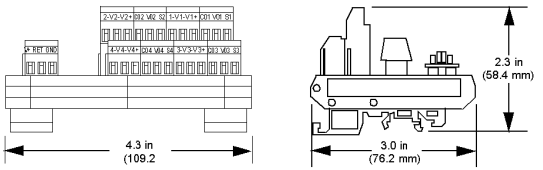

Wiring Diagram (Source Grounding)

The following figure shows the wiring for the 140CFJ00400 (source grounding) module.

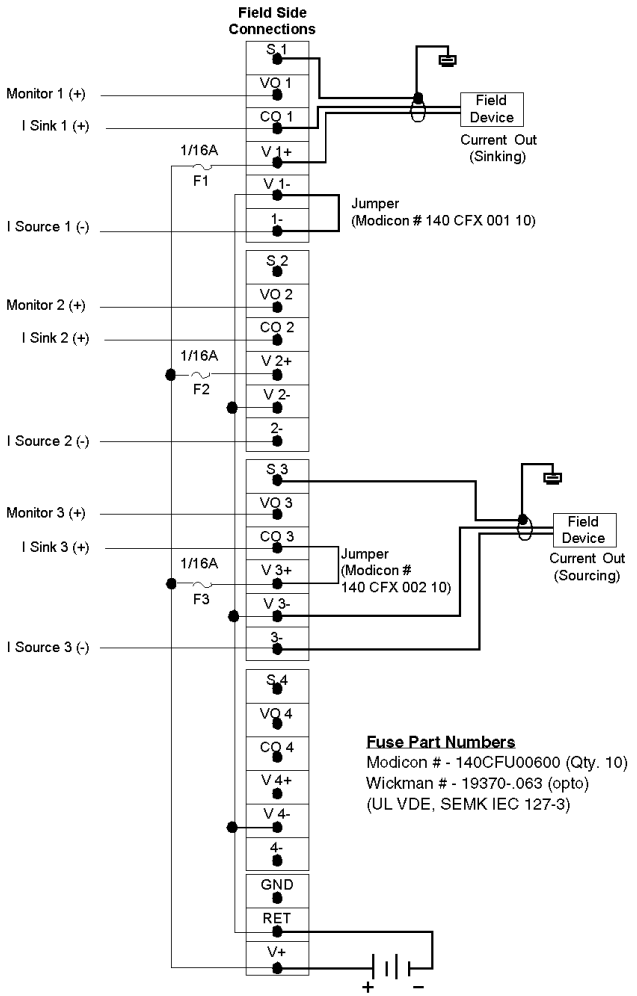

NOTE:

1. When using a single power supply, there will be no channel-to-channel isolation of input points.
2. For the required jumper options for the 140ACO02000, see the wiring diagrams in ACO02000 map, wiring diagram *(see Modicon Quantum, Automation Series, Hardware Reference Guide)*.
3. The GND (ground) terminal point is not connected.

Wiring Diagram (Instrument Grounding)

The following figure shows the wiring for the140CFJ00400 (instrument grounding) module.

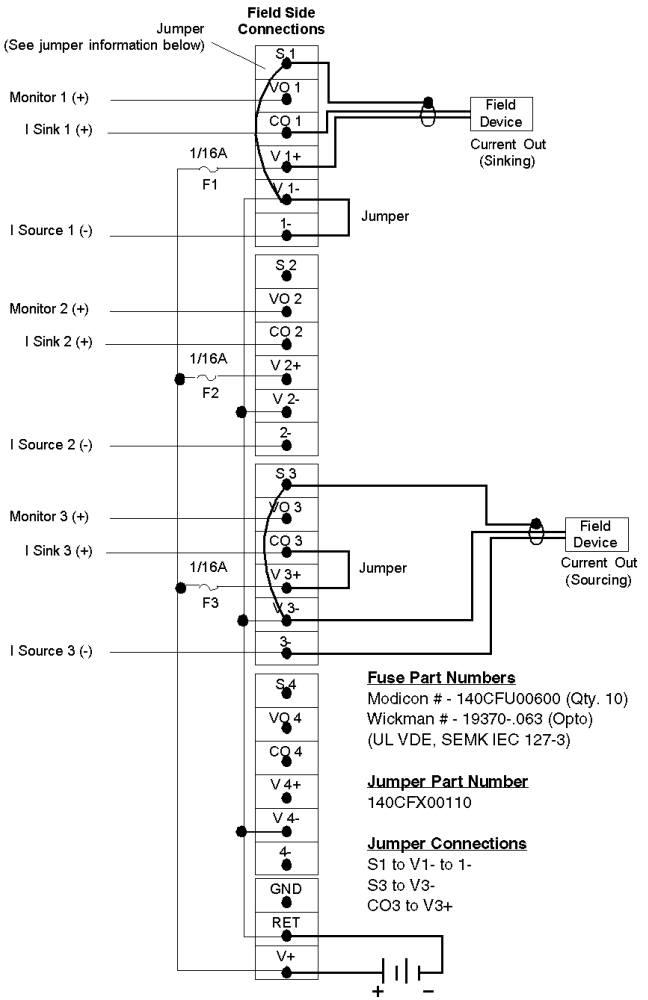

NOTE:

1. When using a single power supply, there will be no channel-to-channel isolation of input points.
2. For the required jumper options for the 140ACO02000, see the wiring diagrams in ACO02000 map, wiring diagram *(see Modicon Quantum, Automation Series, Hardware Reference Guide).*
3. The GND (ground) terminal point is not connected.

Wiring Diagram (Chassis Grounding)

The following figure shows the wiring for the 140CFJ00400 (chassis grounding) module.

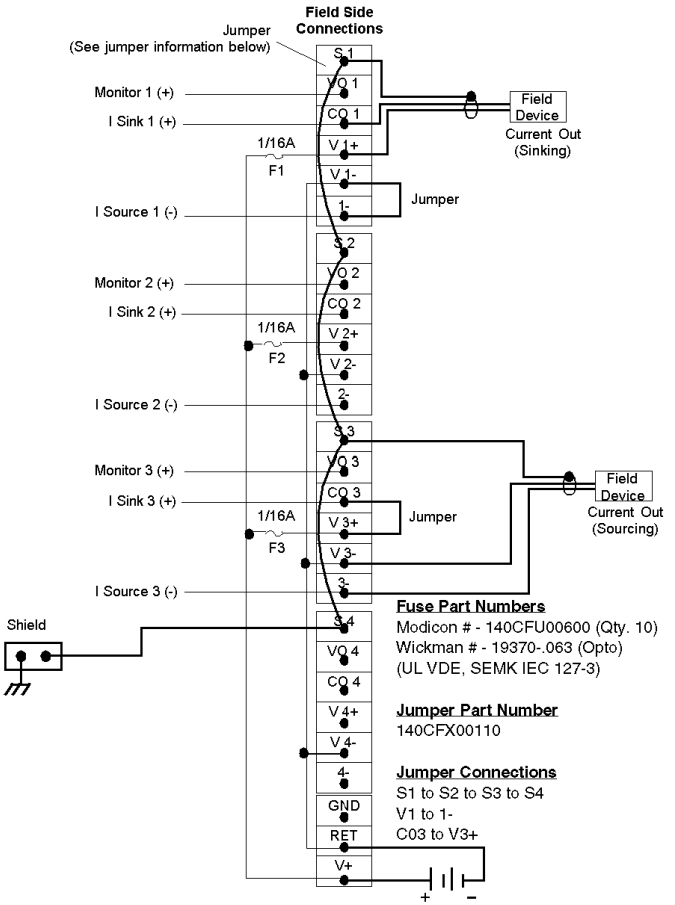

NOTE:

1. When using a single power supply, there will be no channel-to-channel isolation of input points.
2. For the required jumper options for the 140ACO02000, see the wiring diagrams in ACO02000 map, wiring diagram *(see Modicon Quantum, Automation Series, Hardware Reference Guide)*.
3. The GND (ground) terminal point is not connected.

140CFK00400 Quantum CableFast Cabling Block

Overview

The K block is used for analog outputs. This interface provides plus, minus, shield, and power supply interface for both field and loop power configurations.

See Common Features of the CableFast Cabling System *(see Modicon Quantum, Automation Series, Hardware Reference Guide)* for information on common specifications and features of CableFast cabling blocks.

Terminal Block

The following figure shows the 140CFK00400 terminal block.

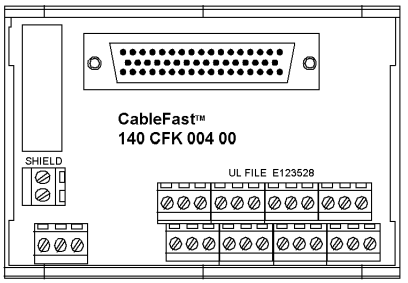

Application Notes

The following are the application notes for the 140CFK00400 module.

1. **Configuration** – Four analog outputs with a common loop supply. Each point is allocated four terminals.
2. **Compatibility** – This terminal block provides four individually unfused connection point sets for the 140ACO02000 and 140AVO02000 analog output modules.

Dimensions

The following figures show the dimensions for the 140CFK00400 module.

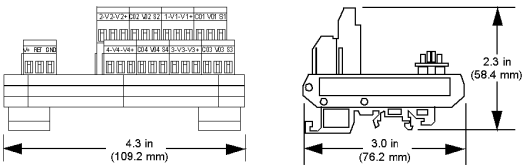

Wiring Diagram (Source Grounding)

The following shows the wiring for the 140CFK00400 (source grounding) module.

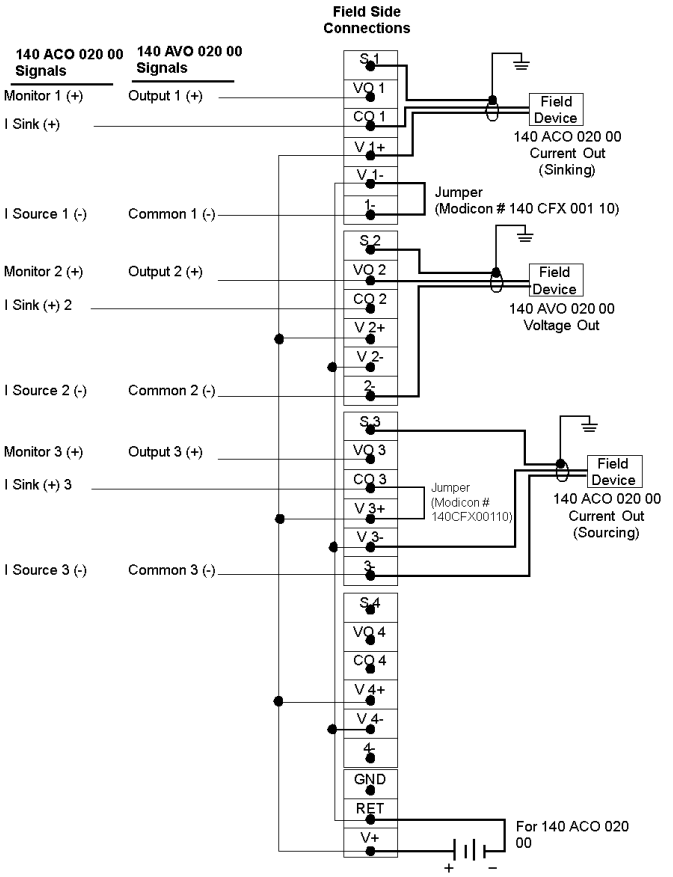

NOTE:

1. When used with the 140AVO02000 analog voltage out module, the master override connections and range select must be made on the Quantum I/O connector.
2. When using a single power supply, there will be no channel-to-channel isolation of input points.
3. For the required jumper options for the 140ACO02000, see wiring diagram in ACO02000 I/O Module *(see Modicon Quantum, Automation Series, Hardware Reference Guide)*.
4. The GND (ground) terminal point is not connected.

Wiring Diagram (Instrument Grounding)

The following figure shows the wiring for the 140CFK00400 (instrument grounding) module.

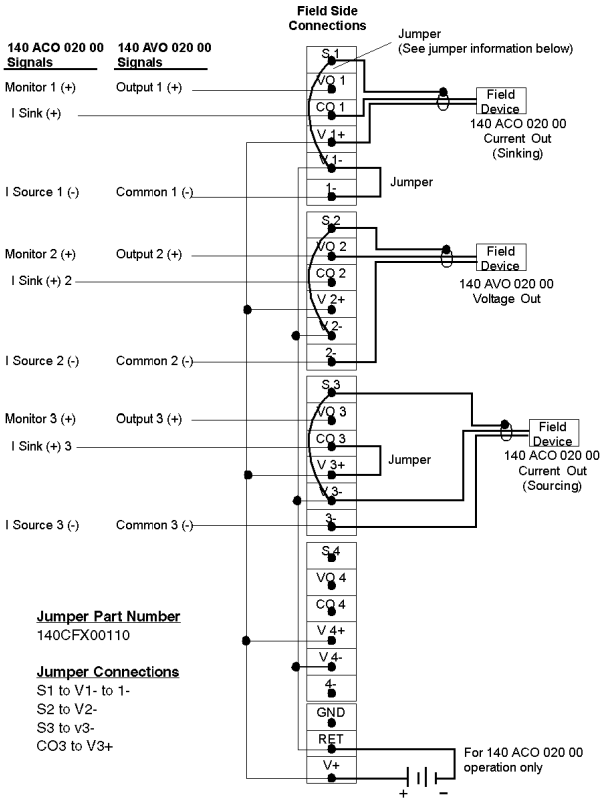

NOTE:

1. When used with the 140AVO02000 analog voltage out module, the master override connections and range select must be made on the Quantum I/O connector.
2. When using a single power supply, there will be no channel-to-channel isolation of input points.
3. For the required jumper options for the 140ACO02000 and the AVO02000, see wiring diagrams in ACO02000 I/O Module *(see Modicon Quantum, Automation Series, Hardware Reference Guide)* and the AVO02000 module *(see Modicon Quantum, Automation Series, Hardware Reference Guide)*.
4. The GND (ground) terminal point is not connected.

Wiring Diagram (Chassis Grounding)

The following shows the wiring for the 140CFK00400 (chassis grounding) module.

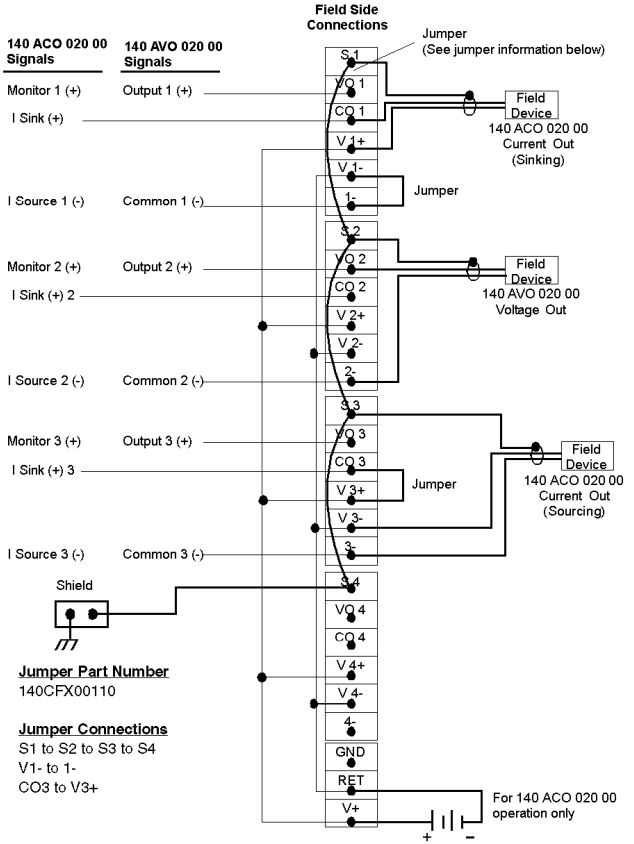

NOTE:

1. When used with the 140AVO02000 analog voltage out module, the master override connections and range select must be made on the Quantum I/O connector.
2. When using a single power supply, there will be no channel-to-channel isolation of input points.
3. For wiring the 140ACO02000 and the 140AVO02000, see the wiring diagrams in ACO02000 I/O Module *(see Modicon Quantum, Automation Series, Hardware Reference Guide)* and AVO02000 module *(see Modicon Quantum, Automation Series, Hardware Reference Guide)*.
4. The GND (ground) terminal point is not connected.

CableFast Cables

Cable Specifications

Standard Power	
Cable Diameter	0.43 in. nominal (10.9 mm)
Number of Conductors	8-#20 AWG (0.8 mm), 7/28 tinned annealed copper; semi rigid PVC32-#26 AWG (0.4 mm), 7/34 tinned annealed copper; semi rigid PVC
Bend Radius (I.D.)	0.75 in. min. (19.0 mm)
High Power	
Cable Diameter	0.55 in. nominal (14.0 mm)
Number of Conductors	8-#18 AWG (1.0 mm), 16/30 tinned annealed copper; semi rigid PVC32-#20 AWG (0.8 mm), 10/30 tinned annealed copper; semi rigid PVC
Bend Radius (I.D.)	38.1 mm (1.50 in) min.
Common Specifications	
Cable Jacket	Jacket color: black, 0.040 in wall min, flexible PVC
Wire Strip Length	8 mm (0.32 in)
Wire Marking	See the wire color coding table
Wire Rating	300 V, 105 °C UL rated 2517, CSA Type AWM 1/2 FT1
Cable Rating	300 V, 105 °C rated
Shielding	Aluminum/polyester tape (aluminum side out) attached at connector body (360 °).#22 AWG, 7/30 drain wire.Shield resistance 16.55 Ω/M ft nominal
Agency Approval	UL-758; AWM style 2517 VW-1 and CSA C22:210.2; AWM I/II A/B FT1

Cable Lengths

Cable Lengths	Terminated		Pigtail
	Standard Power	High Power	High Power
0.91 m (3 ft)	X	X	
1.82 m (6 ft)	X	X	X
2.73 m (9 ft)	X	X	
3.64 m (12 ft)	X	X	
4.6 m (15 ft)			X

Inner Wire Color Codes

The following diagram represents the physical mapping of colors on the standard cablefast wires:

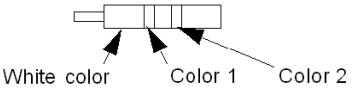

The following table describes the colors mapping of the standard cablefast wires:

Wire/ Pin #	AWG for Standard Power Cable	AWG for High Power Cable	Color	Wire/ Pin #	AWG for Standard Power Cable	AWG for High Power Cable	Color
1	26	20	Black	21	26	20	White/Blue
2	26	20	Brown	22	26	20	White/Violet
3	26	20	Red	23	26	20	White/Gray
4	26	20	Orange	24	26	20	White/ Black/ Brown
5	26	20	Yellow	25	26	20	White/ Black/ Red
6	26	20	Green	26	26	20	White/ Black/ Orange
7	26	20	Blue	27	26	20	White/ Black/ Yellow
8	26	20	Violet	28	26	20	White/ Black/ Green
9	20	18	Black	29	20	20	Yellow
10	20	18	Brown	30	20	18	Green
11	26	20	Gray	31	26	18	White/ Black/ Blue
12	26	20	White	32	26	20	White/ Black/ Violet
13	26	20	White/ Black	33	26	20	White/ Black/ Gray
14	26	20	White/ Brown	34	26	20	White/ Brown/ Red
15	26	20	White/ Red	35	26	20	White/ Brown/ Orange
16	26	20	White/ Orange	36	26	20	White/ Brown/ Yellow
17	26	20	White/Yellow	37	26	20	White/ Brown/ Green
18	26	20	White/ Green	38	26	20	White/ Brown/ Blue
19	20	18	Red	39	20	18	Blue
20	20	18	Orange	40	20	18	Violet

The following diagram represents the physical mapping of colors on the substitution cablefast wires:

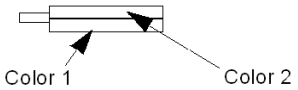

The following table describes the colors mapping of the substitution cablefast wires:

Wire/ Pin #	AWG for Standard Power Cable	AWG for High Power Cable	Color	Wire/ Pin #	AWG for Standard Power Cable	AWG for High Power Cable	Color
1	26	20	Black	21	26	20	White/Blue
2	26	20	Brown	22	26	20	White/Violet
3	26	20	Red	23	26	20	White/Gray
4	26	20	Orange	24	26	20	Black/ Brown
5	26	20	Yellow	25	26	20	Black/ Red
6	26	20	Green	26	26	20	Black/ Orange
7	26	20	Blue	27	26	20	Black/ Yellow
8	26	20	Violet	28	26	20	Black/ Green
9	20	18	Black	29	20	20	Yellow
10	20	18	Brown	30	20	18	Green
11	26	20	Gray	31	26	18	Black/ Blue
12	26	20	White	32	26	20	Black/ Violet
13	26	20	White/ Black	33	26	20	Black/ Gray
14	26	20	White/ Brown	34	26	20	Brown/ Red
15	26	20	White/ Red	35	26	20	Brown/ Orange
16	26	20	White/ Orange	36	26	20	Brown/ Yellow
17	26	20	White/Yellow	37	26	20	Brown/ Green
18	26	20	White/ Green	38	26	20	Brown/ Blue
19	20	18	Red	39	20	18	Blue
20	20	18	Orange	40	20	18	Violet

140 XTS Terminated Cables

Part Number	Cable Type		Cable Description
	Standard Power	High Power	
140 XTS 002 03	X		CableFast system cable with Quantum I/O connector, 0.9 m (3 ft) and D-sub connector
140 XTS 012 03		X	
140 XTS 002 06	X		CableFast system cable with Quantum I/O connector, 1.8 m (6 ft) and D-sub connector
140 XTS 012 06		X	
140 XTS 002 09	X		CableFast system cable with Quantum I/O connector, 2.7 m (9 ft) and D-sub connector
140 XTS 012 09		X	
140 XTS 002 12	X		CableFast system cable with Quantum I/O connector, 3.7 m (12 ft) and D-sub connector
140 XTS 012 12		X	

I/O Connector

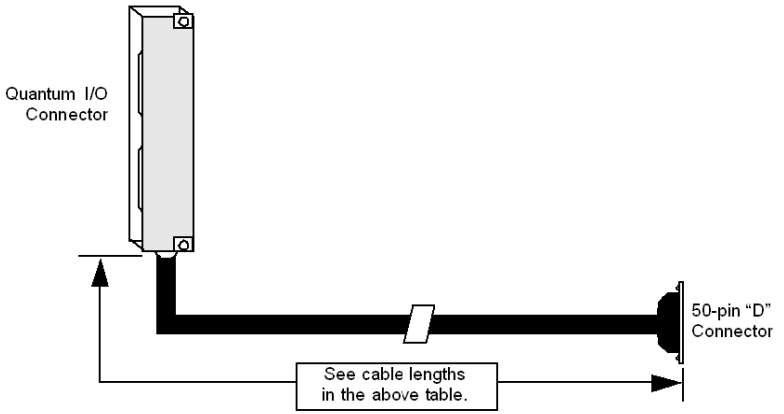

140 XCA 102 Pigtails

Part Number	Cable Type		Cable Description
	Standard Power	High Power	
140 XCA 102 06		X	CableFast system cable, 6 ft (1.8 m), with D-sub connector and pigtails
140 XCA 102 15		X	CableFast system cable, 4.6 m (15 ft), with D-sub connector and pigtails

Pigtail Leads

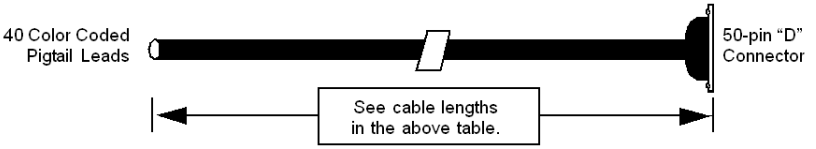

140 XTS 102 Pigtails

Part Number	Cable Type		Cable Description
	Standard Power	High Power	
140 XTS 102 06		X	CableFast system cable with Quantum I/O connector, 1.8 m (6 ft), and pigtail cable
140 XTS 102 15		X	CableFast system cable with Quantum I/O connector, 4.6 m (15 ft), and pigtail cable

I/O Connector for Pigtail Leads

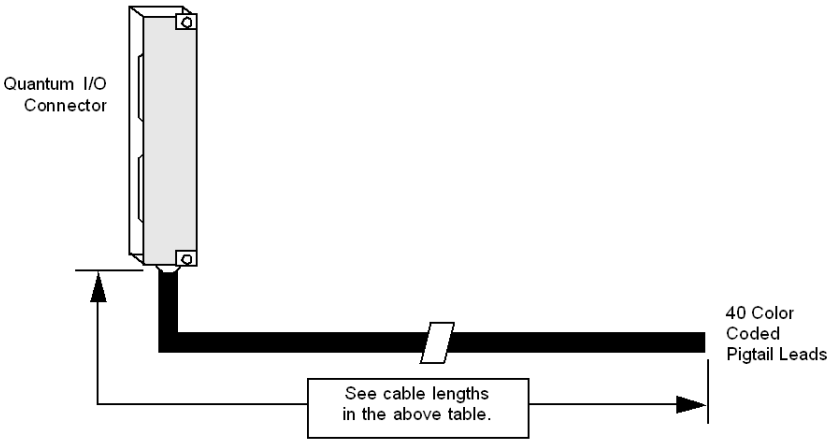

CableFast Accessories

Overview

The following information pertains to the CableFast accessories.

Accessories

The following table shows the part numbers and descriptions for CableFast Accessories.

Part Number	Description	Quantity
140CFU40000	Fuse Kit, Wickmann 4 A	10
140CFU08000	Fuse Kit, Wickmann 0.8 A	10
140CFU00600	Fuse Kit, Wickmann 0.063 A	10
140CFX00110	Terminal Block Common Strip, 10 Position (see below)	10

Terminal Block Common Strip

The following figure shows the terminal block common strip.

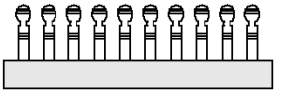

Jumper, Fuse Replacement

Fuse replacement information is given in the following table.

Part Number	Description	Quantity
140 CFX 002 10	Jumper, Fuse Replacement (see below)	10

The following figure shows a jumper.

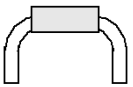

NOTE: The jumper is used instead of fuses as a disconnect device.

ConneXium Ethernet Cabling System

E

Purpose

This appendix provides an overview on the ConneXium Ethernet Cabling System.

NOTE: For further details see *, page* , ConneXium Ethernet Cabling System Quick Reference Guide

What's in this Chapter?

This chapter contains the following topics:

Topic	Page
Introduction	444
Configuration	446

Introduction

The ConneXium NxS Switch

The internal switch control intelligence of a ConneXium NxS permits the redundant coupling of several network segments to a higher network segment.

The switch learns up to 2000 addresses, allowing the connection of several independent subnetworks. When reset, the switch deletes the learned addresses.

Ports' link integrity is provided through link testing in accordance with IEEE 802.3. Additionally, if the receive cable pair signals are incorrectly connected (if RD+ and RD- are switched), the NxS automatically detects it and reverses the connection polarity. The ConneXium NxS switch uses shielded RJ-45 connectors that are internally wired in the accordance with the MDI-X specification.

Installation and Security Instructions

CAUTION

IMPROPER POWER SUPPLY

As electricity is used to operate this equipment, comply in every detail with the safety requirements specified in the operating instructions regarding the voltages to apply.

Failure to follow these instructions can result in equipment damage.

CAUTION

NON-SELV SUPPLY VOLTAGES

The ConneXium Switches 10/100 Mbps 5TX/2FL or 7TX units are designed for operation with safety extra-low voltage. Accordingly, connect only safety extra-low voltages (SELV) conforming to IEC950/EN60950/VDE0805 to the supply voltage connections.

Failure to follow these instructions can result in equipment damage.

Hardware

The following figure describes the interfaces, display elements, and controls of the ConneXium Switch 10/100 Mbps 5TX/2FX.

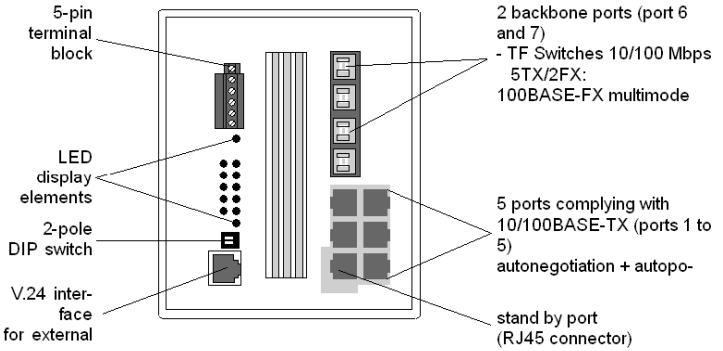

The following figure describes the interfaces, display elements, and controls of the ConneXium Switch 10/100 Mbps 7TX.

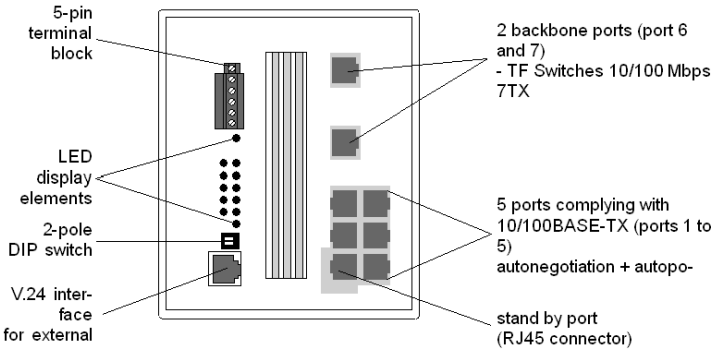

Configuration

Line Structure

The NxS switches enable backbones in line structures to be built up. Cascading is carried out using the backbone ports.

Redundant Ring Structure

With the redundancy manager function of the NxS modules you can close the two ends of a line structured backbone to a redundant ring. The NxS switches are integrated into the ring via the backbone ports (ports 6 and 7). If one section becomes inoperable the reaction time comes to less than 0.5 s at up to 50 NxS modules being cascaded.

Redundant Coupling of Network Segments

The built-in control intelligence of the NxS allows the redundant coupling of network segments.

The connection of two network segments is realized via two separate paths. The NxS switches in the redundant line get the redundancy function assigned by the DIP switch setting standby.

The NxS modules in the redundant line and the NxS switches in the main line share their operating states via the control line (crossover Ethernet cable).

After the failure of the main line the redundant NxS modules enable the redundant line within 0.5 s. If the main line is okay again, the NxS switches in the main line inform the redundant Nxs modules about this. The main line will be enabled and the redundant line will be disabled within 0.5 s.

The following figure shows an optical line structure.

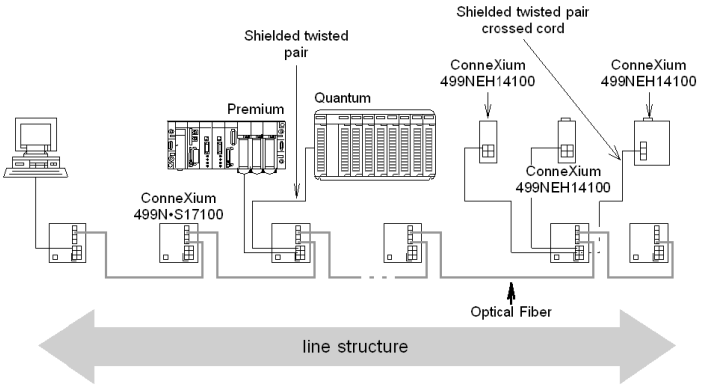

The following figure shows a redundant ring structure.

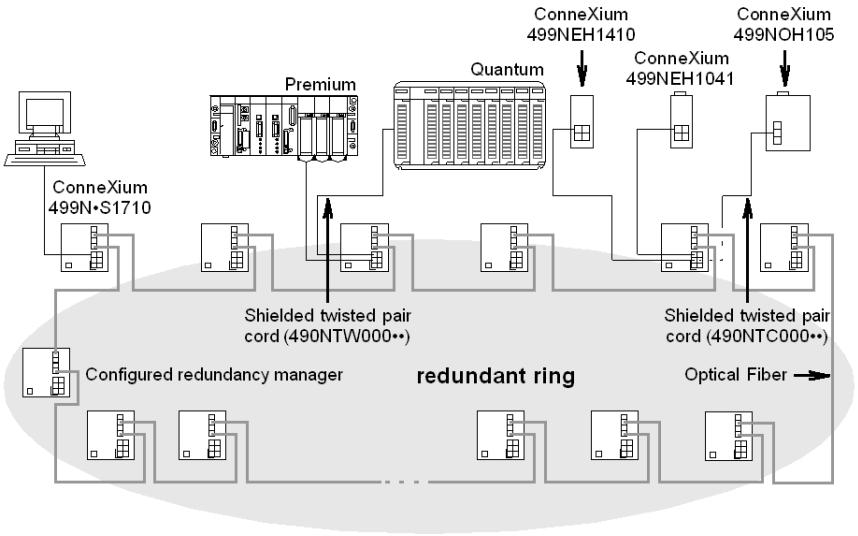

The following figure shows a redundant coupling of optical rings.

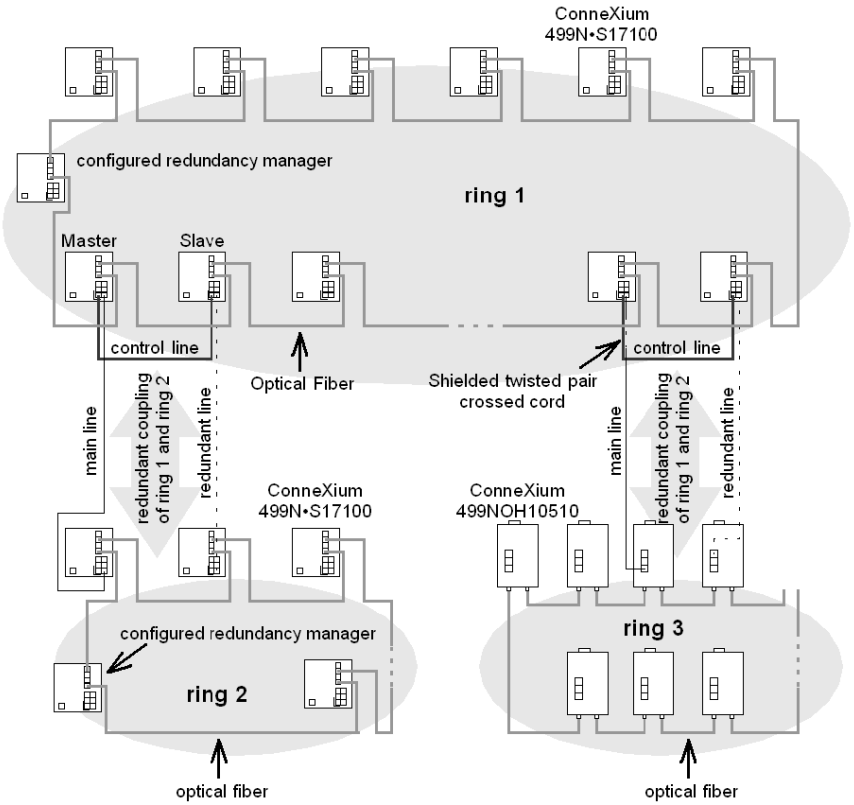

Agency Approvals and Conformal Coating

F

Introduction

This appendix provides information on agency approvals and includes conformal coating availability of the indicated Quantum products.

The table below describes the headings used in the tables in this chapter.

Heading	Description
UL 508	certified by Underwriters Laboratories according to UL 508
c-UL (UL for Canada)	certified by Underwriters Laboratories according to relevant Canadian standards (CSA)
CSA 22.2-142	certified by Canadian Standards Association according to CSA 22.2 n° 142
FM (Class I, Division 2)	certified by Factory Mutual for Hazardous Locations Class 1 Division 2
CE	compliant to the EMC and Low Voltage European Directives

What's in this Chapter?

This chapter contains the following topics:

Topic	Page
Agency Approvals: Power Supply	450
Agency Approvals: CPU	451
Agency Approvals: I/O	452
Agency Approvals: DIO Drops	454
Agency Approvals: RIO Heads and Drops	455
Agency Approvals: Ethernet Modules	456
Agency Approvals: NOM	457
Agency Approvals: Motion Modules	458
Agency Approvals: Battery and Simulator Modules	459

Agency Approvals: Power Supply

Power Supplies Table

The following table provides the agency approvals and conformal coating availability for the power supplies of the indicated Quantum products.

Quantum Part Numbers	Availability of a conformal coated version	Agency Approval Status				
		UL 508	c-UL (UL for Canada)	CSA 22.2-142	FM Class I, Div 2	CE
140 CPS 111 00	y	y	y	y	y	y
140 CPS 114 00	y	y	y	y	y	y
140 CPS 114 10	y	y	y	y	y	y
140 CPS 114 20	y	y	y	y	y	y
140 CPS 124 00	y	y	y	y	y	y
140 CPS 124 20	y	y	y	y	y	y
140 CPS 211 00	y	y	y	y	y	y
140 CPS 214 00	y	y	y	y	y	y
140 CPS 224 00	y	y	y	y	y	y
140 CPS 414 00	y	y	y	y	y	y
140 CPS 424 00	y	y	y	y	y	y
140 CPS 511 00	y	y	y	y	y	y
140 CPS 524 00	y	y	y	y	y	y

Agency Approvals: CPU

CPUs Table

The following table provides the agency approvals and conformal coating availability for the CPUs of the indicated Quantum products.

Quantum Part Numbers	Availability of a conformal coated version	Agency Approval Status				
		UL 508	c-UL (UL for Canada)	CSA 22.2-142	FM Class I, Div 2	CE
140 CPU 311 10	y	y	y	y	y	y
140 CPU 434 12U	y	y	y	y	**n**	y
140 CPU 534 14U	y	y	y	y	**n**	y
140 CPU 651 50	y	y	y	y	***CSA**	y
140 CPU 651 60	y	y	y	y	***CSA**	y
140 CPU 651 60S	y	**Scheduled**	**Scheduled**	**Scheduled**	**Scheduled**	**Scheduled**
140 CPU 652 60	y	y	y	y	***CSA**	y
140 CPU 671 60	y	y	y	y	***CSA**	y
140 CPU 671 60S	y	**Scheduled**	**Scheduled**	**Scheduled**	**Scheduled**	**Scheduled**
140 CPU 672 61	y	**Scheduled**	**Scheduled**	**Scheduled**	**Scheduled**	**Scheduled**

***CSA** Certified by Canadian Standards Association for Hazardous Locations Class 1 Division 2 according to CSA 22.2 n° 213.

Agency Approvals: I/O

I/O Table

The following table provides the agency approvals and conformal coating availability for the I/O of the indicated Quantum products

Quantum Part Numbers	Availability of a conformal coated version	Agency Approval Status				
		UL 508	c-UL (UL for Canada)	CSA 22.2-142	FM Class I, Div 2	CE
140 ACI 030 00	y	y	y	y	y	y
140 ACI 040 00	y	y	y	y	y	y
140 ACO 020 00	y	y	y	y	y	y
140 ACO 130 00	y	y	y	y	y	y
140 AII 330 00	y	y	y	y	y	y
140 AII 330 10	y	y	y	y	y	y
140 AIO 330 00	y	y	y	y	y	y
140 AMM 090 00	y	y	y	y	y	y
140 ARI 030 10	y	y	y	y	y	y
140 ATI 030 00	y	y	y	y	y	y
140 AVI 030 00	y	y	y	y	y	y
140 AVO 020 00	y	y	y	y	y	y
140 DAI 340 00	y	y	y	y	y	y
140 DAI 353 00	y	y	y	y	y	y
140 DAI 440 00	y	y	y	y	y	y
140 DAI 453 00	y	y	y	y	y	y
140 DAI 540 00	y	y	y	y	y	y
140 DAI 543 00	y	y	y	y	y	y
140 DAI 553 00	y	y	y	y	y	y
140 DAI 740 00	y	y	y	y	y	y
140 DAI 753 00	y	y	y	y	**n**	y
140 DAM 590 00	y	y	y	y	y	y
140 DAO 840 00	y	y	y	y	y	y
140 DAO 840 10	y	y	y	y	y	y
140 DAO 842 10	y	y	y	y	y	y
140 DAO 842 20	y	y	y	y	y	y
140 DAO 853 00	y	y	y	y	**n**	y

Quantum Part Numbers	Availability of a conformal coated version	Agency Approval Status				
		UL 508	c-UL (UL for Canada)	CSA 22.2-142	FM Class I, Div 2	CE
140 DDI 153 10	y	y	y	y	y	y
140 DDI 353 00	y	y	y	y	**n**	y
140 DDI 353 10	y	y	y	y	y	y
140 DDI 673 00	y	y	y	y	y	y
140 DDI 841 00	y	y	y	y	**n**	y
140 DDI 853 00	y	y	y	y	**n**	y
140 DDM 390 00	y	y	y	y	y	y
140 DDM 690 00	y	y	y	y	y	y
140 DDO 153 10	y	y	y	y	y	y
140 DDO 353 00	y	y	y	y	y	y
140 DDO 353 01	y	y	y	y	y	y
140 DDO 353 10	y	y	y	y	y	y
140 DDO 364 00	y	y	y	y	y	y
140 DDO 843 00	y	y	y	y	y	y
140 DDO 885 00	y	y	y	y	y	y
140 DII 330 00	y	y	y	y	y	y
140 DIO 330 00	y	y	y	y	y	y
140 DRA 840 00	y	y	y	y	y	y
140 DRC 830 00	y	y	y	y	y	y
140 DSI 353 00	y	y	y	y	y	y
140 DVO 853 00	y	y	y	y	y	y
140 SAI 940 00S	y	**Scheduled**	**Scheduled**	**Scheduled**	**Scheduled**	**Scheduled**
140 SDI 953 00S	y	**Scheduled**	**Scheduled**	**Scheduled**	**Scheduled**	**Scheduled**
140 SDO 953 00S	y	**Scheduled**	**Scheduled**	**Scheduled**	**Scheduled**	**Scheduled**

Agency Approvals: DIO Drops

DIO Drops Table

The following table provides the agency approvals and conformal coating availability for the DIO drops of the indicated Quantum products.

Quantum Part Numbers	Availability of a conformal coated version	Agency Approval Status				
		UL 508	c-UL (UL for Canada)	CSA 22.2-142	FM Class I, Div 2	CE
140 CRA 211 10	y	y	y	y	y	y
140 CRA 211 20	y	y	y	y	y	y
140 CRA 212 10	y	y	y	y	y	y
140 CRA 212 20	y	y	y	y	y	y

Agency Approvals: RIO Heads and Drops

RIO Heads and Drops Table

The following table provides the agency approvals and conformal coating availability for the RIO Heads and Drops of the indicated Quantum products.

Quantum Part Numbers	Availability of a conformal coated version	Agency Approval Status				
		UL 508	c-UL (UL for Canada)	CSA 22.2-142	FM Class I, Div 2	CE
140 CRA 931 00	y	y	y	y	y	y
140 CRA 931 01	y	y	y	y	y	y
140 CRA 932 00	y	y	y	y	y	y
140 CRP 931 00	y	y	y	y	y	y
140 CRP 932 00	y	y	y	y	y	y

Agency Approvals: Ethernet Modules

Ethernet Modules Table

The following table provides the agency approvals and conformal coating availability for the Ethernet modules of the indicated Quantum products.

Quantum Part Numbers	Availability of a conformal coated version	Agency Approval Status				
		UL 508	c-UL (UL for Canada)	CSA 22.2-142	FM Class I, Div 2	CE
140 NOE 211 00	y	y	y	y	y	y
140 NOE 211 10	y	y	y	y	y	y
140 NOE 251 00	y	y	y	y	y	y
140 NOE 251 10	y	y	y	y	y	y
140 NOE 311 00	y	y	y	y	y	y
140 NOE 351 00	y	y	y	y	y	y
140 NOE 511 00	y	y	y	y	y	y
140 NOE 551 00	y	y	y	y	y	y
140 NOE 771 00	y	y	y	y	y	y
140 NOE 771 01	y	y	y	y	n	y
140 NOE 771 10	y	y	y	y	y	y
140 NOE 771 11	y	y	y	y	y	y
140 NWM 100 00	y	y	y	y	y	y

Agency Approvals: NOM

NOM modules Table

The following table provides the agency approvals and conformal coating availability for the NOM modules of the indicated Quantum products.

Quantum Part Numbers	Availability of a conformal coated version	Agency Approval Status				
		UL 508	c-UL (UL for Canada)	CSA 22.2-142	FM Class I, Div 2	CE
140 NOM 211 00	y	y	y	y	y	y
140 NOM 212 00	y	y	y	y	y	y
140 NOM 252 00	y	y	y	y	y	y

Agency Approvals: Motion Modules

Motion Modules Table

The following table provides the agency approvals and conformal coating availability for the Motion Modules of the indicated Quantum products.

Quantum Part Numbers	Availability of a conformal coated version	Agency Approval Status				
		UL 508	c-UL (UL for Canada)	CSA 22.2-142	FM Class I, Div 2	CE
140 MMS 425 01	y	y	y	y	y	y
140 MMS 535 02	y	y	y	y	y	y
140 MSB 101 00	y	y	y	y	y	y

Agency Approvals: Battery and Simulator Modules

Battery and Simulator Table

The following table provides the agency approvals and conformal coating availability for the battery and simulators modules of the indicated Quantum products.

Quantum Part Numbers	Availability of a conformal coated version	Agency Approval Status				
		UL 508	c-UL (UL for Canada)	CSA 22.2-142	FM Class I, Div 2	CE
140 XCP 900 00	y	y	y	y	y	y
140 XSM 002 00	**n**	y	y	y	**n**	y
140 XSM 010 00	**n**	y	y	y	**n**	y

System Specifications

G

Purpose

This appendix provides an overview on the Quantum System Specifications.

What's in this Chapter?

This chapter contains the following topics:

Topic	Page
Mechanical and Electrical Specifications	462
Power Supply Specifications	463
I/O Module Specifications	464
Operating and Storage Conditions	465

Mechanical and Electrical Specifications

Mechanical Specifications

Weight	1 kg (2 lb) max
Dimensions (H x D x W)	250 x 103.85 x 40.34 mm (9.84 x 4.09 x 1.59 in)
Wire Size	1-14 AWG or 2-16 AWG max. 20 AWG min.
Material (Enclosures and Bezels)	Polycarbonates
Space Requirements	1 rack slot (only HE-CPUs need 2 rack slots)

Electrical Specifications

RFI Immunity (IEC 1000-4-3)	80 ...1000 MHz, 10 V/m
Ground Continuity (IEC 1000-4-5)	2 kV shield to ground
Electrostatic Discharge (IEC 1000-4-2)	8 kV air / 4 kV contact
Flammability	Wiring connector: 94V-0 module enclosure: 94V-1

Agency Approvals

.

UL 508
CSA 22.2-142
Factory Mutual Class 1, Div 2
European Directive on EMC 89/336/EEC (CE)

NOTE: Quantum system modules contain static-sensitive components. Each module is labeled with the following static-sensitive symbol.

Power Supply Specifications

AC/DC Power Supplies

Fast transients (IEC 1000-4-4)	2 kV common mode
Damped ocillatory transients	2 kV common mode.
	1 kV differential mode
Surge withstand capability (transients) (IEC 1000-4-5)	2 kV common mode
	1 kV differential mode
Nonperiodic peak input voltage	2.3 times nominal for 1.3 ms (Nominal = DC average or AC peak)

I/O Module Specifications

I/O Modules with Operating Voltages Less than 24 V

Fast transients (IEC 1000-4-4)	0.5 kV common mode
Damped oscillatory transients	1 kV common mode
	0.5 kV differential mode
Surge withstand capability (transients) (IEC 1000-4-5)	1 kV common mode
	0.5 kV differential mode

I/O Modules with 24 to 48 V Operating Voltages

Fast transients (IEC 1000-4-4)	1 kV
Damped oscillatory transients	2 kV common mode
	1 kV differential mode
Surge withstand capability (transients) (IEC 1000-4-5)	1 kV common mode
	0.5 kV differential mode

I/O Modules with Operating Voltages Greater than 48 V

Fast transients (IEC 1000-4-4)	2 kV
Damped oscillatory transients	2 kV common mode
	1 kV differential mode
Surge withstand capability (transients) (IEC 1000-4-5)	2 kV common mode
	1 kV differential mode

Operating and Storage Conditions

Operating Conditions

Temperature	0 ... 60 °C (32 ... 140 °F)
Humidity	90 ... 95% RH non-condensing at 6 °C
Chemical interactions	Enclosures and terminal strips are made of polycarbonates. This material can be damaged by strong alkalis and various hydrocarbons, esters, halogens and ketones in combination with heat. Common products containing these include detergents, PVC products, petroleum products, pesticides, disinfectants, paint removers, and spray paints.
Altitude	2,000 m. When the altitude exceeds this, reduce the 60 °C maximum operating temperature by 6 °C/1000 m of additional elevation.
Vibration	10 ... 57 Hz at 0.075 mm constant displacement amplitude 57 ... 150 Hz at 1 g
Shock	+/-15 g peak, 11 ms, half-sine wave

Storage Conditions

Temperature	-40 ... 85 °C. C -40 ... 185 °F
Humidity	0 ... 95% RH noncondensing at 60 °C
Free Fall	1 m (3 ft)

Gas Resistance in Conformally Coated Modules

This table shows the results of the mixed flowing gas test, 22 days exposure

Standard	Gas	Test Requirement	Actual Exposure
EIA364-65 Level III	CL2 (chlorine)	20 PPB, +/- 5 PPB	20 PPB
	NO2 (nitric oxide)	200 PPB, +/- 50 PPB	1250 PPB
	H2S (hydrogen sulfide)	100 PPB, +/- 20 PPB	100 PPB
	SO2 (sulfur oxide)	N/A	300 PPB
ISA-S71.04 (GX Severe)	CL2 (chlorine)	10 PPB	20 PPB
	NO2 ((nitric oxide)	1250 PPB	1250 PPB
	H2S (hydrogen sulfide)	50 PPB	100 PPB
	O2 (sulfur oxide)	300 PPB	300 PPB

Index

0-9

140 CFC 032 00
    wiring diagram for 140 DDI 153 10, *409*
140CFA04000, *401*
140CFB03200, *403*
140CFC03200, *406*
140CFD03200, *412*
140CFE03200, *414*
140CFG01600, *416*
140CFH00800, *421*
140CFI00800, *425*
140CFJ00400, *429*
140CFK00400, *433*
140CFU00600, *442*
140CFU04000, *442*
140CFU08000, *442*
140CFX00110, *442*
140CPS11100, *217*, *221*
140CPS11400, *225*
140CPS11410, *229*
140CPS11420, *233*
140CPS12400, *237*
140CPS12420, *241*
140CPS21100, *245*
140CPS21400, *249*
140CPS22400, *253*
140CPS41400, *257*
140CPS42400, *261*
140CPS51100, *265*
140CPS52400, *269*
140CPU31110, *122*
140CPU43412A, *124*
140CPU53414A/U, *127*
140CPU53414B/U, *130*
140CPU65150, *133*
140CPU65160, *133*
140CPU65160S, *133*
140CPU65260, *133*
140CPU67160, *133*
140CPU67160S, *133*
140DAI34000, *417*
140DAI35300, *408*
140DAI44000, *417*
140DAI45300, *408*
140DAI54000, *417*
140DAI55300, *408*
140DAO84000, *418*
140DAO84010, *418*
140DAO84210, *419*
140DAO84220, *419*
140DDI35300, *408*
140DDI85300, *408*
140DDO15310, *410*
140DDO3530X, *411*
140DDO84300, *420*
140XBE10000, *283*
140XBP00200, *277*
140XBP00300, *278*
140XBP00400, *279*
140XBP00600, *280*
140XBP01000, *281*
140XBP01600, *282*
140XCP20000, *353*
140XCP50000, *353*

140XCP51000, *354*
140XCP60000, *354*
140XCP90000, *299*
140XSM00200, *298*
140XSM01000, *294*
140XTS00100, *354*
140XTS00200, *355*
43509446, *359*
490NAA27101, *351*
490NAA27102, *351*
490NAA27103, *351*
490NAA27104, *351*
490NAA27106, *351*
52-0487-000, *359*
990NAA26320, *351*
990NAA26350, *351*
990NAD21110, *351*
990NAD21130, *351*
990NAD21810, *351*
990NAD21830, *351*
990NAD21910, *351*
990NAD21930, *351*
990NAD23000, *351*
990NAD23010, *351*

A

AS-MBII-003, *351*
AS-MBII-004, *351*

B

batteries
    990XCP90000, *353*
    990XCP98000, *353*
    changing, *188*
    TSXBATM02, *188*
    TSXBATM03, *188*
battery for PCMCIA cards
    lifetime, *192*

C

CableFast, *393*
cabling blocks, *393*
compliance, *449*
configuring discrete I/O modules, *73*
CRC (cyclic redundancy check), *138*
cyclic redundancy check (CRC), *138*

D

diagnosing hot standby, *151*
diagnosing processors, *95*
discrete simulator module, *298*
double code execution, *138*
double code generation, *138*

E

Ethernet, *46*

G

grounding, *361*

H

hot standby, *133*
Hot Standby (HSBY)
    Maintenance Mode, *141*
    run offline, *141*
    run primary state, *141*
    run standby state, *141*
    Safety Mode, *141*
    stop offline, *141*
HSBY (Hot Standby)
    Maintenance Mode, *141*
    run offline, *141*
    run primary state, *141*
    run standby state, *141*
    Safety Mode, *141*
    stop offline, *141*

I

installing modules, *77*
installing racks, *77*

K

key switches, *152*
keypads, *145*

L

Low End CPU
    illustration, *98*

M

MA-0329-001, *359*
MA-0329-002, *359*
memory cards, *181*
memory Cards, *182*
menus
    high end CPUs, *151*
Modbus bus, *49*, *149*
    SubD ports, *106*
Modbus Plus network, *49*

N

network support, *35*

P

power supply modules, *201*
process Safety time (PST), *138*
processors, *174*
PST (process Safety time), *138*

Q

Quantum Safety CPU
    internal 1oo2 architecture, *137*

R

rack, *350*
racks, *31*
    operating guidelines, *287*

T

terminal blocks
    coding, *387*
TSXMCPC001M, *182*
TSXMCPC002M, *182*
TSXMCPC004M, *182*
TSXMCPC512K, *182*
TSXMFPP001M, *182*
TSXMFPP002M, *182*
TSXMFPP004M, *182*
TSXMFPP512K, *182*
TSXMRPC001M, *182*
TSXMRPC001M7, *182*
TSXMRPC002M, *182*
TSXMRPC003M, *182*
TSXMRPC007M, *182*
TSXMRPC768K, *182*
TSXMRPM004M, *182*
TSXMRPM008M, *182*

W

watchdog, *138*

wiring accessories, *353*
140CFU00600, *442*
140CFU04000, *442*
140CFU08000, *442*
140CFX00110, *442*
490NAA27101, *351*
490NAA27102, *351*
490NAA27103, *351*
490NAA27104, *351*
490NAA27106, *351*
990NAA26320, *351*
990NAA26350, *351*
990NAD21110, *351*
990NAD21130, *351*
990NAD21810, *351*
990NAD21830, *351*
990NAD21910, *351*
990NAD21930, *351*
990NAD23000, *351*
990NAD23010, *351*
AS-MBII-003, *351*
AS-MBII-004, *351*
ConneXium Ethernet, *443*
wiring configurations, *59*

X

XSM00200, *298*