Modicon Momentum I/O Base

User Guide

9/2010

31001697.14

www.schneider-electric.com

Schneider Electric

The information provided in this documentation contains general descriptions and/or technical characteristics of the performance of the products contained herein. This documentation is not intended as a substitute for and is not to be used for determining suitability or reliability of these products for specific user applications. It is the duty of any such user or integrator to perform the appropriate and complete risk analysis, evaluation and testing of the products with respect to the relevant specific application or use thereof. Neither Schneider Electric nor any of its affiliates or subsidiaries shall be responsible or liable for misuse of the information contained herein. If you have any suggestions for improvements or amendments or have found errors in this publication, please notify us.

No part of this document may be reproduced in any form or by any means, electronic or mechanical, including photocopying, without express written permission of Schneider Electric.

All pertinent state, regional, and local safety regulations must be observed when installing and using this product. For reasons of safety and to help ensure compliance with documented system data, only the manufacturer should perform repairs to components.

When devices are used for applications with technical safety requirements, the relevant instructions must be followed.

Failure to use Schneider Electric software or approved software with our hardware products may result in injury, harm, or improper operating results.

Failure to observe this information can result in injury or equipment damage.

© 2010 Schneider Electric. All rights reserved.

Table of Contents

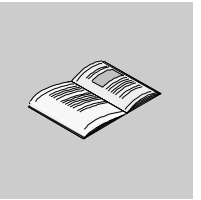

Safety Information **13**
About the Book **15**
Part I Using Momentum I/O Bases **17**
Chapter 1 Introducing the TSX Momentum I/O Bases **19**
Basic Features of I/O Bases 20
Types of I/O Bases 22
Chapter 2 Selecting Other TSX Momentum Components **25**
Which Components Should I Use? 26
Communication Adapters 28
Processor Adapters. 29
Option Adapters 31
Terminal Connectors. 32
Busbars 34
Chapter 3 Assembly **37**
Assembling an Adapter and an I/O Base 38
Disassembling an Adapter from an I/O Base 41
Assembling a Processor Adapter and an Option Adapter. 43
Mounting the Assembled Adapters on the I/O Base 45
Disassembling a Module with an Option Adapter 47
Using Terminal Connector Coding Keys 50
Inserting Terminal Connectors 51
Removing a Terminal Connector. 52
Attaching a Busbar 53
Labeling the Components in the Assembly. 54
Chapter 4 Dimensions and Mounting Instructions **55**
Dimensions of Assembled TSX Momentum Devices 56
Standard Adapter on a Typical Base. 57
Standard Adapter on a Discrete VAC Base 58
Processor and Option Adapter on a Typical Base 59
Processor and Option Adapter on a Discrete VAC Base 60
Mounting TSX Momentum Devices. 61

Chapter 5 Power and Grounding Guidelines 63
Voltage Types 64
Structuring Your Power Supply System. 65
Selecting Power Supplies 67
Single Power Supply Configuration 68
Protective Circuits for DC Actuators 70
Protective Circuits for AC Actuators. 72
Grounding Momentum Devices 73
Grounding DIN Rail Terminals and Cabinets. 75
Grounding Analog I/O Lines. 76
Part II I/O Base Descriptions 77
Chapter 6 170 AAI 030 00 Analog 8 Channel Differential Input Module Base. 79
Front Panel Components. 80
Specifications. 82
Internal Pin Connections 84
Field Wiring Guidelines 85
Wiring Illustrations 87
I/O Mapping 88
Analog Channel Parameters 89
Analog Inputs. 91
Input Measuring Ranges 93
Chapter 7 170 AAI 140 00 Analog 16 Channel Single-Ended Input Module Base. 97
Front Panel Components. 98
Specifications. 100
Internal Pin Connections 102
Field Wiring Guidelines 103
Wiring Diagrams 105
I/O Mapping 106
Analog Channel Parameters 107
Analog Inputs. 109
Input Measuring Ranges 111
Chapter 8 170 AAI 520 40 Analog 4 Channel RTD, Therm. and mV Input Module Base. 113
Front Panel Components. 114
Specifications. 116
Internal Pin Connections 124
Field Wiring Guidelines 125
Wiring Diagrams 127
I/O Mapping 128
Analog Channel Parameters 129
Analog Inputs. 134
RTD, Thermocouple and mV Input Measuring Ranges. 136

Chapter 9 170 AAO 120 00 Analog 4 Channel Output Module Base +/- 10 V, 0 - 20 mA 139
Front Panel Components 140
Specifications 142
Internal Pin Connections 144
Field Wiring Guidelines 145
Wiring Diagrams 147
I/O Mapping 148
Analog Channel Parameters 149
Analog Outputs 151
Output Ranges 152
Chapter 10 170 AAO 921 00 Analog 4 Channel Output Module Base +/- 10 V, 4 ... 20 mA 155
Front Panel Components 156
Specifications 158
Internal Pin Connections 160
Field Wiring Guidelines 161
Wiring Diagrams 163
I/O Mapping 164
Analog Channel Parameters 165
Analog Outputs 167
Output Ranges 168
Chapter 11 170 ADI 340 00 24 VDC - 16 Pt. Discrete Input Module Base 169
Front Panel Components 170
Specifications 172
Internal Pin Connections 174
Field Wiring Guidelines 175
Wiring Diagrams 177
I/O Mapping 179
Chapter 12 170 ADI 350 00 24 VDC - 32 Pt. Discrete Input Module Base 183
Front Panel Components 184
Specifications 186
Internal Pin Connections 188
Field Wiring Guidelines 189
Wiring Diagrams 191
I/O Mapping 193

Chapter 13 170 ADI 540 50 120 VAC - 16 Point Discrete Input Module Base 197
Front Panel Components 198
Specifications 200
Internal Pin Connections 203
Field Wiring Guidelines 204
Wiring Diagrams 205
I/O Mapping 207
Chapter 14 170 ADI 740 50 230 VAC - 16 Point Discrete Input Module Base 211
Front Panel Components 212
Specifications 214
Internal Pin Connections 217
Field Wiring Guidelines 218
Wiring Diagrams 219
I/O Mapping 221
Chapter 15 170 ADM 350 10 24 VDC - 16 Pt. In / 16 Pt. Out Module Base 225
Front Panel Components 226
Specifications 228
Internal Pin Connections 231
Field Wiring Guidelines 232
Wiring Diagrams 234
I/O Mapping 239
Chapter 16 170 ADM 350 11 24 VDC - 16 Pt. In / 16 Pt. Out Module Base 243
Front Panel Components 244
Specifications 246
Internal Pin Connections 249
Field Wiring Guidelines 250
Wiring Diagrams 252
I/O Mapping 257
Chapter 17 170 ADM 350 15 24 VDC - 16 Pt. In / 16 Pt. Out Module Base 261
Front Panel Components 262
Specifications 264
Internal Pin Connections 267
Field Wiring Guidelines 268
Wiring Diagrams 270
I/O Mapping 271

Chapter 18 170 ADM 370 10 24 VDC - 16 Pt. In / 8 Pt. Out @ 2 Amp. Module Base 275
Front Panel Components 276
Specifications 278
Internal Pin Connections 281
Field Wiring Guidelines 282
Wiring Diagrams 284
I/O Mapping 289
Chapter 19 170 ADM 390 10 24 VDC - 16 Pt. In / 12 Pt. Out Monitored Module Base 293
Front Panel Components 294
Specifications 296
Internal Pin Connections 299
Field Wiring Guidelines 300
Wiring Diagrams 302
I/O Mapping 305
Chapter 20 170 ADM 390 30 24 VDC - 10 Pt. In / 8 Pt. Relay Out Module Base 309
Front Panel Components 310
Specifications 312
Internal Pin Connections 315
Field Wiring Guidelines 316
Wiring Diagrams 318
I/O Mapping 321
Chapter 21 170 ADM 390 31 24 VDC - 10 Pt. In / 8 Pt. Relay Out Module Base 325
Front Panel Components 326
Specifications 328
Internal Pin Connections 331
Field Wiring Guidelines 332
Wiring Diagrams 334
I/O Mapping 337
Chapter 22 170 ADM 540 80 120 VAC - 6 Pt. In / 3 Pt. Out Discrete MCC Module Base 341
Front Panel Components 342
Specifications 344
Internal Pin Connections 347
Field Wiring Guidelines 348
Wiring Diagrams 351
I/O Mapping 352
General Modbus Message Rules 354

Output Words 357
Output Words Control Modes 361
Input Words 366
Input Words Control Modes 368
Chapter 23 170 ADM 690 50 120 VAC - 10 Pt. In / 8 Pt. Out Module Bases 371
Front Panel Components 372
Specifications 374
Internal Pin Connections 377
Field Wiring Guidelines 378
Wiring Diagrams 380
I/O Mapping 383
Chapter 24 170 ADM 690 51 120 VAC - 10 Pt. In / 8 Pt. Out Module Bases 387
Front Panel Components 388
Specifications 390
Internal Pin Connections 393
Field Wiring Guidelines 394
Wiring Diagrams 396
I/O Mapping 400
Chapter 25 170 ADM 850 10 10 to 60 VDC Module Base 403
Front Panel Components 404
Specifications 406
Internal Pin Connections 410
Field Wiring Guidelines 411
Wiring Diagrams 413
I/O Mapping 418
Chapter 26 170 ADO 340 00 24 VDC - 16 Pt. Discrete Output Module Base 421
Front Panel Components 422
Specifications 424
Internal Pin Connections 426
Field Wiring Guidelines 427
Wiring Diagrams 429
I/O Mapping 431
Chapter 27 170 ADO 350 00 24 VDC - 32 Pt. Discrete Output Module Base 435
Front Panel Components 436
Specifications 438
Internal Pin Connections 440
Field Wiring Guidelines 441
Wiring Diagrams 443
I/O Mapping 445

Chapter 28 170 ADO 530 50 120 VAC - 8 Point Discrete Output @ 2A Module Base 449
Front Panel Components 450
Specifications 452
Internal Pin Connections 455
Field Wiring Guidelines 456
Wiring Diagrams 458
I/O Mapping 461
Chapter 29 170 ADO 540 50 120 VAC - 16 Point Discrete Output Module Base 465
Front Panel Components 466
Specifications 468
Internal Pin Connections 471
Field Wiring Guidelines 472
Wiring Diagrams 474
I/O Mapping 477
Chapter 30 170 ADO 730 50 230 VAC - 8 Point Discrete Output @ 2A Module Base 481
Front Panel Components 482
Specifications 484
Internal Pin Connections 487
Field Wiring Guidelines 488
Wiring Diagrams 490
I/O Mapping 493
Chapter 31 170 ADO 740 50 230 VAC - 16 Point Discrete Output Module Base 497
Front Panel Components 498
Specifications 500
Internal Pin Connections 503
Field Wiring Guidelines 504
Wiring Diagrams 506
I/O Mapping 509
Chapter 32 170 ADO 830 30 6 Pt. Relay Out Module Base 513
Front Panel Components 514
Specifications 516
Internal Pin Connections 519
Field Wiring Guidelines 520
Wiring Diagrams 522
I/O Mapping 524

Chapter 33 170 AMM 090 00 Analog 4 Ch. In / 2 Ch. Out Module Base w/ 24 VDC I/O Pts 527
Front Panel Components 528
Specifications 530
Internal Pin Connections 534
Field Wiring Guidelines 535
Wiring Diagrams 537
I/O Mapping 540
Analog Channel Parameters 542
Analog Outputs 545
Analog Inputs 546
Discrete Inputs and Outputs 547
Input Measuring Ranges 548
Error Messages 554
Chapter 34 170 AMM 090 01 Analog 4 Ch. In / 2 Ch. Out Module Base w/ 12 VDC I/O Pts 557
Front Panel Components 558
Specifications 560
Internal Pin Connections 564
Field Wiring Guidelines 565
Wiring Diagrams 567
I/O Mapping 570
Analog Channel Parameters 572
Analog Outputs 575
Analog Inputs 576
Discrete Inputs and Outputs 577
Input and Output Measuring Ranges 578
Error Messages 584
Chapter 35 170 ANR 120 90 Unipolar Analog 6 Ch. In / 4 Ch. Out Module Base with 24 VDC I/O Points 587
Front Panel Components 588
Specifications 590
Internal Pin Connections 594
Field Wiring Guidelines 595
Wiring Diagrams 597
I/O Mapping 599
Output Words 602
Inputs Words 606
Input and Qutput Measuring Ranges 608
Error Messages 610

Chapter 36 170 ANR 120 91 Bipolar Analog 6 Ch. In / 4 Ch. Out Module Base with 24 VDC I/O Points 611
Front Panel Components 612
Specifications 614
Internal Pin Connections 617
Field Wiring Guidelines 618
Wiring Diagrams 620
I/O Map 622
Register for Outputs 623
4x Registers 626
Register for Inputs 627
Analog Map 629
Discrete I/O Points and IEC Compliant Data Mapping 630
Input and Output Ranges 631
Interpreting the Error Bits 633
Chapter 37 170 ARM 370 30 24 VDC - 10 Pt. In / 8 Pt. Relay Out Module Base (120 VAC Powered) 635
Front Panel Components 636
Specifications 638
Internal Pin Connections 641
Field Wiring Guidelines 642
Wiring Diagrams 645
I/O Mapping 648
Chapter 38 170 CPS 111 00 TIO Power Supply Module 651
Front Panel Components 652
Specifications 654
Terminal Connectors 658
External Operating Voltage Connections 660
Appendices 663
Appendix A System Specifications 665
Power Supply Specifications 666
Field Device Interfaces 667
Environmental Specifications 668
Appendix B Interference Suppression 671
Interference Suppression 671
Appendix C IEC 1131 Input Types 673
Input Voltage and Current Thresholds 673
Appendix D Field Wire Length 675
Calculating Field Wire Length for AC and DC Devices 675
Appendix E IEC Symbols 677
Glossary of IEC Symbols 677
Index 679

Safety Information

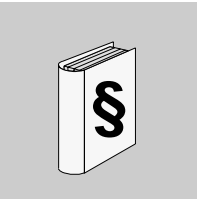

Important Information

NOTICE

Read these instructions carefully, and look at the equipment to become familiar with the device before trying to install, operate, or maintain it. The following special messages may appear throughout this documentation or on the equipment to warn of potential hazards or to call attention to information that clarifies or simplifies a procedure.

The addition of this symbol to a Danger or Warning safety label indicates that an electrical hazard exists, which will result in personal injury if the instructions are not followed.

This is the safety alert symbol. It is used to alert you to potential personal injury hazards. Obey all safety messages that follow this symbol to avoid possible injury or death.

⚠ DANGER

DANGER indicates an imminently hazardous situation which, if not avoided, **will result in** death or serious injury.

⚠ WARNING

WARNING indicates a potentially hazardous situation which, if not avoided, **can result in** death or serious injury.

⚠ CAUTION
CAUTION indicates a potentially hazardous situation which, if not avoided, **can result in** minor or moderate injury.

CAUTION
CAUTION, used without the safety alert symbol, indicates a potentially hazardous situation which, if not avoided, **can result in** equipment damage.

PLEASE NOTE

Electrical equipment should be installed, operated, serviced, and maintained only by qualified personnel. No responsibility is assumed by Schneider Electric for any consequences arising out of the use of this material.

A qualified person is one who has skills and knowledge related to the construction and operation of electrical equipment and the installation, and has received safety training to recognize and avoid the hazards involved.

About the Book

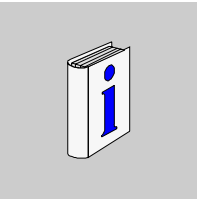

At a Glance

Document Scope

This manual contains complete information about the Momentum I/O bases. It contains only passing references to other Momentum components, including processor adapters, option adapters, and communication adapters.

Validity Note

This document is valid for Unity Pro 2.0 or later.

The technical characteristics of the device(s) described in this manual also appear online. To access this information online:

Step	Action
1	Go to *www.schneider-electric.com*
2	In the **Search** box on the home page, type a model number. Do not type any blank spaces in the model number. To get information on a grouping similar modules, you can use the characters **; do not use dots or *xx*'s.
3	Under **All**, click **Products** →**Product Datasheets** and select the model number that interests you.
4	To save or print a data sheet as a .pdf file, click **Export to PDF**.

The characteristics presented in this manual should be the same as those that appear online. In line with our policy of constant improvement we may revise content over time to improve clarity and accuracy. In the event that you see a difference between the manual and online information, use the online information as your reference.

Related Documents

Title of Documentation	Reference Number
Momentum Processor Adapter and Option Adapter User Guide	870 USE 101
Momentum InterBus Communication Adapter User Manual	870 USE 009
Momentum Profibus-DP Communication Adapter User Manual	870 USE 004
Momentum FIPI/O Communication Adapter User Manual	870 USE 005
Momentum ControlNet Communication Adapter User Manual	870 USE 007
Momentum 170 AEC 920 00 I/O Base with 2 High-Speed Counters User Manual	870 USE 008
Momentum Modbus Plus PNT Series Communication Adapter User Manual	870 USE 103
Momentum DeviceNet Communication Adapter User Manual	870 USE 104
Momentum Modbus Plus NEF Series Communication Adapter User Manual	870 USE 111
Momentum 170ENT11001/170ENT11002 Ethernet Communications Adapter User Guide	870 USE 114

You can download these technical publications and other technical information from our website at www.schneider-electric.com.

User Comments

We welcome your comments about this document. You can reach us by e-mail at techcomm@schneider-electric.com.

Using Momentum I/O Bases

I

Overview

This part describes how to assemble TSX Momentum I/O bases with other Momentum components, how to mount assembled modules, and how to ground them.

What's in this Part?

This part contains the following chapters:

Chapter	Chapter Name	Page
1	Introducing the TSX Momentum I/O Bases	19
2	Selecting Other TSX Momentum Components	25
3	Assembly	37
4	Dimensions and Mounting Instructions	55
5	Power and Grounding Guidelines	63

Introducing the TSX Momentum I/O Bases

1

Overview

This chapter introduces the basic features and types of TSX Momentum I/O bases.

What's in this Chapter?

This chapter contains the following topics:

Topic	Page
Basic Features of I/O Bases	20
Types of I/O Bases	22

Basic Features of I/O Bases

Overview

This section provides a drawing of a typical I/O base and describes basic features of I/O bases.

Front View

The front panel components of a typical I/O base are shown in the illustration below

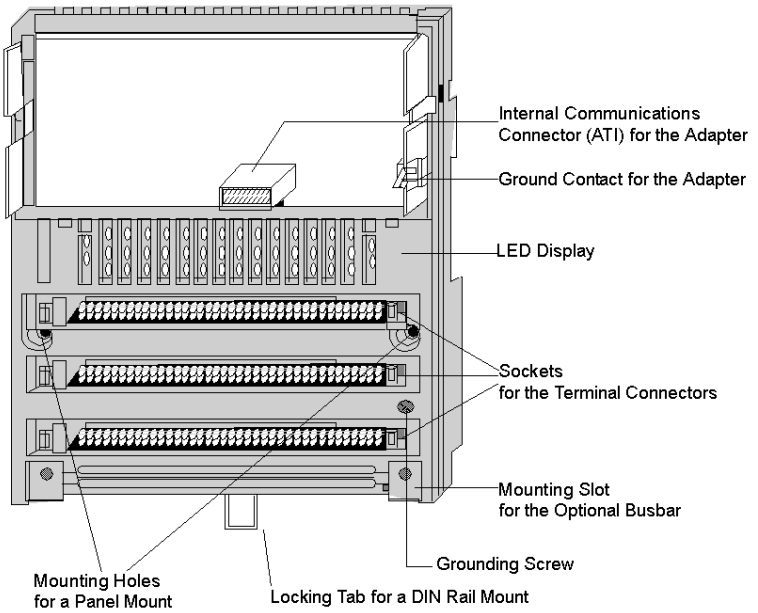

Internal Communications Connector

The internal communications connector on an I/O base provides automatic communication to any adapter mounted on the base.

LED Display

Each I/O base has a custom LED display, providing information about the status of input and output devices. Refer to the LED illustration and description for your I/O base for details.

Ground Contact

This contact provides an earth ground connection to any adapter mounted on the base.

Terminal Connector Sockets

Each I/O base has sockets for as many as three terminal connectors. Terminal connectors are required for connecting I/O devices and must be ordered separately. For ordering information, see *Terminal Connectors, page 27*.

Busbar Slot

A slot at the bottom of the I/O base allows a busbar to be attached to support 3- and 4-wire field devices. Busbars are optional. They must be ordered separately. For ordering information, see *Busbar Numbers, page 53*.

Mounting

Each I/O base has mounting holes for a panel mount and a locking tab for a DIN rail mount. For mounting instructions, see *Mounting TSX Momentum Devices, page 61*.

CE Compliant

TSX Momentum I/O bases are designed to meet CE mark requirements for open equipment. Other agency approvals can be found in the specifications for each I/O base module.

Types of I/O Bases

Overview

This section provides part numbers and descriptions for the TSX Momentum I/O bases.

Analog

The following analog I/O bases are available.

Part Number	Channels	Type	Details
170 AAI 030 00	8	Input	Broken wire detection
170 AAI 140 00	16	Input	Single-ended
170 AAI 520 40	4	Input	RTD/Thermocouple/mV
170 AAO 120 00	4	Output	0...20 mA
170 AAO 921 00	4	Output	4...20 mA

Combination

The following I/O bases support a combination of analog and discrete I/O.

Part Number	Channels	Type	Details
170 AMM 090 00	4 analog in 2 analog out 4 discrete in 2 discrete out	Input/Output	24 VDC
170 ANR 120 90 Unipolar	6 analog in 4 analog out 8 discrete in 8 discrete out	Input/Output	24 VDC
170 ANR 120 91 Bipolar	6 analog in 4 analog out 8 discrete in 8 discrete out	Input/Output	24 VDC

Discrete

The following discrete I/O bases are available.

Part Number	Points	Type	Details
170 ADI 340 00	16	Input	24 VDC
170 ADI 350 00	32	Input	24 VDC
170 ADI 540 50	16	Input	120 VAC

Part Number	Points	Type	Details
170 ADI 740 50	16	Input	230 VAC
170 ADM 350 10	16 in 16 out	Input Output	24 VDC, True High
170 ADM 350 11	16 in 16 out	Input Output	24 VDC, True High Fast Inputs
170 ADM 350 15	16 in 16 out	Input Output	24 VDC, True Low
170 ADM 370 10	16 in 8 out	Input Output	24 VDC @ 2 A
170 ADM 390 10	16 in 12 out	Input Output	24 VDC
170 ADM 390 30	10 in 8 relay out	Input Output	24 VDC
170 ADM 690 51	10 in 8 out	Input Output	120 VAC
170 ADO 340 00	16	Output	24 VDC
170 ADO 350 00	32	Output	24 VDC
170 ADO 530 50	8	Output	115 VAC @ 2A
170 ADO 540 50	16	Output	120 VAC
170 ADO 730 50	8	Output	230 VAC @ 2A
170 ADO 740 50	16	Output	230 VAC
170 ARM 370 30	10 in 8 out	Input Output	120 VAC Powered 24 VDC in

NOTE: The 170 ADM 690 50 has been replaced by the 170 ADM 690 51.

Specials

The following specialty I/O bases are available.

Part Number	Points	Type	Details
170 AEC 920 00	2	Counter	24 VDC
170 ANM 050 10		Seriplex	
170 ADM 540 80	6 in/3 out	Modbus	120 VAC

Selecting Other TSX Momentum Components

2

Overview

A TSX Momentum I/O base must be assembled with a communication adapter or processor adapter in order to function. If you choose a processor adapter, you may also use an option adapter.

This chapter describes:
- TSX Momentum adapters
- terminal connectors
- busbars

What's in this Chapter?

This chapter contains the following topics:

Topic	Page
Which Components Should I Use?	26
Communication Adapters	28
Processor Adapters	29
Option Adapters	31
Terminal Connectors	32
Busbars	34

Which Components Should I Use?

Overview

This topic explains the choices you have in assembling a Momentum I/O device.

Primary Adapter

Each TSX Momentum I/O base must be assembled with a communication adapter or a processor adapter. Without one of these adapters, the I/O base will not function.

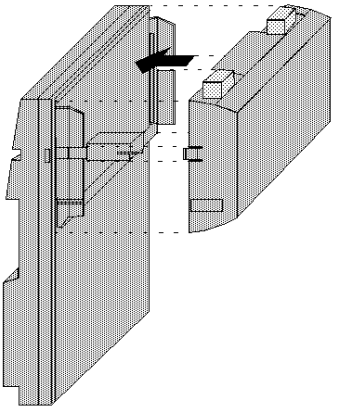

Option Adapter

If you use a processor adapter, you may add an option adapter. Option adapters cannot be used with communication adapters.

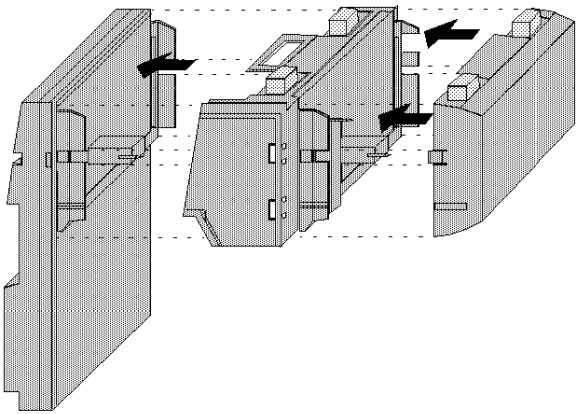

Terminal Connectors

Terminal connectors must be used to connect I/O devices to the I/O base.

Busbars

Busbars may be used to support 3- and 4-wire field devices. They are optional.

Communication Adapters

Overview

This topic describes the function of communication adapters, the types available, and where to get more information.

Function

A communication adapter provides an interface between an I/O base and a number of industry standard open-communication networks.

Types

The following communication adapters are available.

For this Network...	Order this Adapter...	and this Manual...
ControlNet	170 LNT 810 00	870 USE 007
DeviceNet	170 LNT 710 00	870 USE 104
Ethernet	170 ENT 110 01	870 USE 114
FIPI/O	170 FNT 110 00	870 USE 005
InterBus	170 INT 110 00 170 INT 110 01 170 INT 120 00	870 USE 009
Modbus Plus (IEC data format)	170 PNT 110 20 (Single Port) 170 PNT 160 20 (Dual Port)	870 USE 103
Modbus Plus (984 data format)	170 NEF 110 21 (Single Port) 170 NEF 160 21 (Dual Port)	870 USE 111
Profibus-DP	170 DNT 110 00	870 USE 004

Processor Adapters

Overview

This topic describes the function of processor adapters, the types available, and where to get more information.

Function

A processor adapter is a programmable logic controller (PLC). It stores and executes a logic program, and controls I/O points over a common communication bus. It is designed to mount on any Momentum I/O base and control its points as local I/O.

The following Momentum processor adapters are available.

Model	Internal Memory	Flash RAM	Clock Speed	Comm Ports
171 CCS 700 00	64K bytes	256K bytes	20 MHz	One Modbus RS-232 port
171 CCS 700 10	64K bytes	256K bytes	32 MHz	One Modbus RS-232 port
171 CCS 760 00	256K bytes	256K bytes	32 MHz	One Modbus RS-232 port
				One I/O bus port
171 CCC 760 10	512K bytes	512K bytes	32 MHz	One Modbus RS-232 port
				One I/O Bus port
171 CCS 780 00	64K bytes	256K bytes	20 MHz	One Modbus RS-232 port
				One Modbus RS-485 port
171 CCC 780 10	512K bytes	512K bytes	32 MHz	One Modbus RS-232 port
				One Modbus RS-485 port
171 CCC 960 20	512K bytes	512K bytes	50 MHz	One Ethernet port
				One I/O Bus port
171 CCC 960 30	512K bytes	512K bytes	50 MHz	One Ethernet port
				One I/O bus port
171 CCC 980 20	512K bytes	1 M bytes	50 MHz	One Ethernet port
				One Modbus RS-485 port
171 CCC 980 30	512K bytes	1 M bytes	50 MHz	One Ethernet port
				One Modbus RS-485 port

Model	Internal Memory	Flash RAM	Clock Speed	Comm Ports
171 CCC 960 91	512K bytes	512K bytes	50 MHz	One Ethernet port
				One I/O bus port
171 CCC 980 91	512K bytes	1 M bytes	50 MHz	One Ethernet port
				One Modbus RS-485 port
171 CBB 970 30	512K bytes	1 M bytes	50 MHz	Four Ethernet ports
				One Modbus RS-232/485 port

For More Information

For detailed descriptions of all the processor adapters, refer to the *TSX Momentum Processor Adapter and Option Adapter User Guide* (870 USE 101).

Option Adapters

Overview

This section describes the function of option adapters, the types available, and where to get more information.

Function

An option adapter is used in conjunction with a processor adapter and an I/O base to provide:

- a time-of-day clock
- a battery backup
- one or more additional communication ports

Types

The following option adapters are available

For these Communication Ports...	Order Adapter Part Number...
One user-selectable RS-232/RS-485 port	172 JNN 210 32
One Modbus Plus port	172 PNN 210 22
Two (redundant) Modbus Plus ports	172 PNN 260 22

For More Information

For detailed descriptions of all option adapters, refer to the *TSX Momentum Processor Adapter and Option Adapter User Guide* (870 USE 101).

Terminal Connectors

Overview

This section describes:

- the function of terminal connectors
- the coding key feature
- types of terminal connectors available
- how many are needed
- how to order them

Function

Terminal connectors are used to connect I/O field devices and the power supply to the I/O base. While busbars may also be used, terminal connectors are electrically connected to the module, busbars are not.

Coding Key Feature

Some I/O bases can be operated over dangerous voltage ranges (above 42.4 VAC and above 60 VDC). Coding keys shipped with the I/O base and coding tabs shipped with the terminal connector can be used to prevent the accidental insertion into an I/O base of a terminal connector wired for the wrong voltage range.

For information on using coding keys, see Using Terminal Connector Coding Keys *(see page 50)*.

NOTE: For maximum protection, key coding is required during installation.

Types

Terminal connectors are available in screw-in and spring-clip versions.

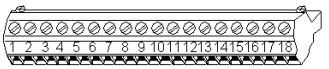

Screw-type terminal block

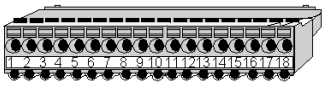

Spring-clip terminal block

How Many Do I Need?

One terminal connector is required for each row of terminals that you will connect to the module's operating voltages and field devices.

Ordering Information

Terminal connectors must be ordered separately. They are available in kits of three. They are not shipped with the Momentum I/O bases.

Type	Kit Part Number	Wire Type	Wire Size
Screw-in (set of 3) **Note**: The recommended maximum torque for the screws on these connectors is 4.4 in/lb (0.5 Nm).	170 XTS 001 00	Solid or stranded	If one wire, use 12AWG ($2.5mm^2$) max. If two wires, use 14AWG ($1.5mm^2$) max.
Spring-clip (set of 3)	170 XTS 002 00	Solid only	

Busbars

Overview

This section describes:
- The function of busbars
- Types of busbars
- How to choose a busbar
- How to order a busbar

Function

A busbar may be plugged into the fourth row of an I/O base. Busbars provide a common connection for the field devices and serve as protective distribution connectors, for instance to PE. Each row of terminals on the busbar is connected internally. There is no electrical connection to the I/O base.

Types

Depending on the I/O base and the type and number of field devices to which it is connected, a 1-, 2-, or 3-row busbar may be used.

They are available in screw-in and spring-clip versions.

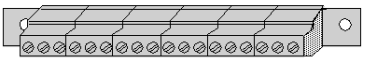

Screw-in 1 -row busbar

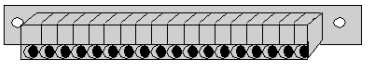

Spring-clip 1-row busbar

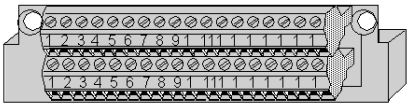

Screw-in 2 -row busbar

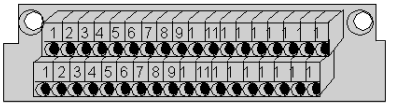

Spring-clip 2-row busbar

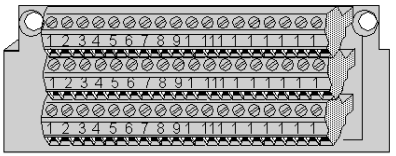

Screw-in 3 -row busbar

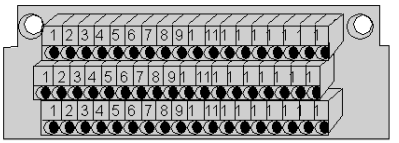

Spring-clip 3-row busbar

Specifications

Busbars have the following specifications:

Busbar type	Screw-in	Spring-clip
Max. load at 20 deg. C	250 V 14 A	250 V 17.5 A
Short circuit	100 A 30 s	100 A 30 s
Test voltage	2.2 kV	2.2 kV
Creepage / air dist.	per IEC 664A	per IEC 664A
Pollution	Degree 2	Degree 2
Contact derating at 70 deg. C	ca. 60% of nominal value	ca. 60% of nominal value

How to Choose a Busbar

See the internal pin connections and field wiring diagrams associated with your I/O base to determine whether or not you need a busbar and which busbar best suits your needs.

Ordering Information

Busbars should be ordered separately. They are not shipped with I/O bases.

Busbar Type	Part Number	# of Rows	Wire Size
Screw-in	170 XTS 006 01	1	If one wire, use 10AWG (4mm^2) max. If two wires, use 14AWG (2.5mm^2) max.
	170 XTS 005 01	2	One or two wires 14AWG (2.5mm^2) max.
	170 XTS 004 01	3	One or two wires 14AWG (2.5mm^2) max.
Spring-clip	170 XTS 007 01	1	If one wire, use 10AWG (4mm^2 max. If two wires, use 14AWG (2.5mm^2) max.
	170 XTS 008 01	2	One or two wires 14AWG (2.5mm^2) max.
	170 XTS 003 01	3	One or two wires 14AWG (2.5mm^2) max.

Assembly

3

Overview

This chapter describes how to assemble and disassemble the components of a TSX Momentum device:

- I/O bases
- communication adapters or processor adapters
- option adapters
- terminal connectors
- busbars
- labels

What's in this Chapter?

This chapter contains the following topics:

Topic	Page
Assembling an Adapter and an I/O Base	38
Disassembling an Adapter from an I/O Base	41
Assembling a Processor Adapter and an Option Adapter	43
Mounting the Assembled Adapters on the I/O Base	45
Disassembling a Module with an Option Adapter	47
Using Terminal Connector Coding Keys	50
Inserting Terminal Connectors	51
Removing a Terminal Connector	52
Attaching a Busbar	53
Labeling the Components in the Assembly	54

Assembling an Adapter and an I/O Base

Overview

A processor adapter or communication adapter can be snapped directly onto a Momentum I/O base. This section contains safety precautions for handling components and an assembly procedure.

Connection Points

The adapter and I/O base connect at these three points.

- The plastic snap extensions on the two sides of the adapter fit into the two slots on the sides of the I/O base.
- The 12-pin ATI connectors on the two units mate together.

No Tools Required

CAUTION

STATIC ELECTRICITY DAMAGE

Use proper ESD procedures when handling the adapter, and do not touch the internal elements. The adapter's electrical elements are sensitive to static electricity.

Failure to follow these instructions can result in equipment damage.

⚠ DANGER

RISK OF ELECTRICAL SHOCK

Make sure that the I/O base is not under power when it does not have an adapter mounted on it. Electrical circuitry on the I/O base may be exposed when a Momentum adapter is not mounted.

To make sure that power is not present, do not insert the wiring connectors to the I/O base until after the adapter has been mounted.

Failure to follow these instructions will result in death or serious injury.

The components can be snapped together by hand. No assembly tools are required.

Procedure

Follow the steps in the table below to assemble an adapter and an I/O base.

Step	Action
1	Choose a clean environment to assemble the I/O base and adapter to protect the circuitry from contamination.
2	Make sure that the I/O base is not under power while you assemble the module.
3	Align the two plastic snap extensions on the adapter with the slots on the sides of the I/O base. The 12-pin ATI connectors will automatically line up when the units are in this position. The two devices should be oriented such that their communication ports are facing out on the back side of the assembly. 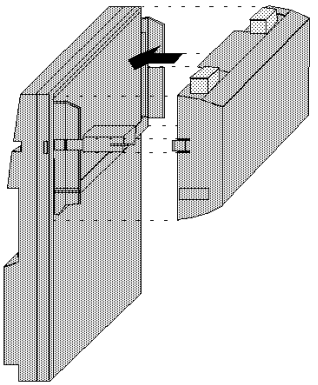
4	Push the adapter onto the base, gently pressing the locking tabs inward. **Result:** The locking tabs on each side of the adapter slide inside the I/O base and out through the locking slot. The 12-pin ATI connectors on the two units are mated to each other in the process. 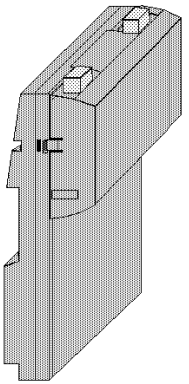

Next Step

Once the adapter and I/O base have been assembled, the device can be mounted on a DIN rail or surface-mounted inside a panel enclosure.

A Momentum device is classified as open equipment; i.e., electrical circuitry on the unit may be exposed. Open equipment should be installed in an industry-standard enclosure, and direct access must be restricted to qualified service personnel.

Disassembling an Adapter from an I/O Base

Overview

This section contains safety precautions and a procedure for disassembling an adapter from an I/O base.

Tools Required

⚠ DANGER

RISK OF ELECTRICAL SHOCK

Before removing an adapter from the base, disconnect the wiring connectors.

Make sure that the I/O base is not under power when it does not have a Momentum adapter mounted on it.

Failure to follow these instructions will result in death or serious injury.

A flat-head screw driver.

Procedure

Follow the steps in the table below to remove an adapter from an I/O base.

Step	Action
1	Choose a clean environment to disassemble the unit, in order to protect the circuitry from contamination.
2	Make sure that the I/O base is not under power by removing the terminal connectors from the I/O base.

Step	Action
3	Use a screwdriver to push the clips on both sides of the adapter inward, as shown in the illustration below. 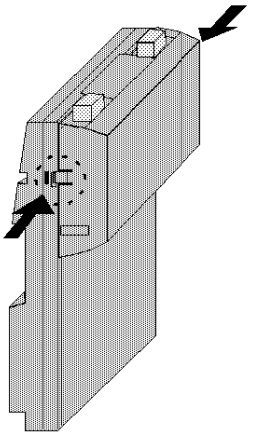
4	Lift off the adapter. 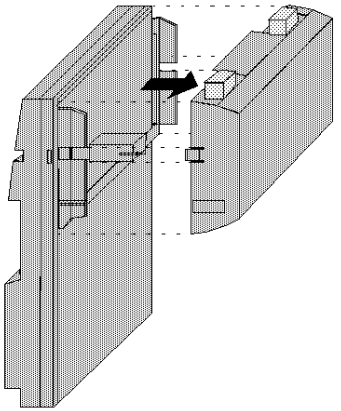

Assembling a Processor Adapter and an Option Adapter

Overview

If a TSX Momentum option adapter is used, it is mounted between an M1 processor adapter and an I/O base in a three-tiered stack.

This section contains guidelines, safety precautions and a procedure for assembling a processor adapter and an option adapter.

Guidelines

We recommend that you snap together the option adapter and the M1 processor adapter before mounting them on the I/O base.

Connection Points

The option adapter and M1 processor connect at these four points.

- The plastic snap extensions on the two sides of the processor adapter fit into the two slots on the sides of the option adapter.
- The 12-pin ATI connectors on the center of the back walls of the two units mate together.
- The 34-pin processor extension connectors that run along the left sidewalls of the components mate together.

No Tools Required

The components can be snapped together by hand; no assembly tools are required. A flat-head screw driver is required to disassemble the unit.

Procedure

Follow the steps in the table below to assemble an option adapter and an M1 processor adapter.

Step	Action
1	Choose a clean environment to assemble the option adapter and processor to protect the circuitry from contamination.
2	Align the two plastic snap extensions on the sides of the M1 processor adapter with the slots on the sides of the option adapter. The 12-pin ATI connectors and processor extension connectors will automatically line up when the units are in this position. The two devices should be oriented such that their communication ports are facing out on the back side of the assembly.

CAUTION
PIN ALIGNMENT Do not connect one side and try to rotate the M1 onto the option adapter. Proper assembly requires that the 34 pins on the processor extension connector be aligned correctly with the mating socket on the M1 processor adapter. **Failure to follow these instructions can result in equipment damage.**

Step	Action
3	Push the processor adapter onto the option adapter, gently pressing the locking tabs inward. 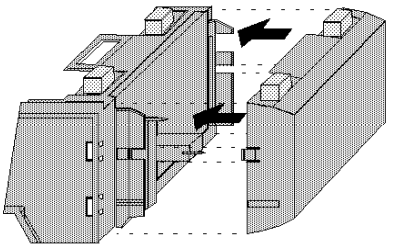 **Result:** The locking tabs on each side of the Processor Adapter slide inside the Option Adapter and out through the locking slot. The 12-pin ATI connectors on the two units are mated to each other in the process.

Next Step

Follow the directions in the next section to mount the assembled adapters on the I/O base.

Mounting the Assembled Adapters on the I/O Base

Overview

This section gives guidelines, safety precautions and a procedure for mounting the assembled processor and option adapter on an I/O base.

Connection Points

The assembled adapters connect with the I/O base at these seven points.

- Two plastic snaps on the front of the option adapter fit into two slots on the front of the I/O base.
- The plastic snap extensions on the two sides of the option adapter fit into the two slots on the sides of the I/O base.
- The 12-pin ATI connectors on the center of the back walls of the two units mate together.
- The plastic stirrup on the back of the option adapter clips onto the bottom of the I/O base.

No Tools Required

⚠ DANGER

RISK OF ELECTRICAL SHOCK

Make sure that the I/O base is not under power when it does not have an adapter mounted on it. Electrical circuitry on the I/O base may be exposed when a Momentum adapter is not mounted.

To make sure that power is not present, do not insert the wiring connectors to the I/O base until after the adapter has been mounted.

Failure to follow these instructions will result in death or serious injury.

The components can be snapped together by hand; no assembly tools are required. A flat-head screw driver is required to disassemble the unit.

Procedure

Follow the steps in the table below to mount the assembly on an I/O base

Step	Action
1	Make sure that the I/O base is not under power when you assemble the module.
2	Align the four plastic snap extensions (on the front and sides of the option adapter) with the slots on the I/O base. The 12-pin ATI connectors will automatically line up when the units are in this position. The devices should be oriented such that their communication ports are facing out on the back side of the assembly. 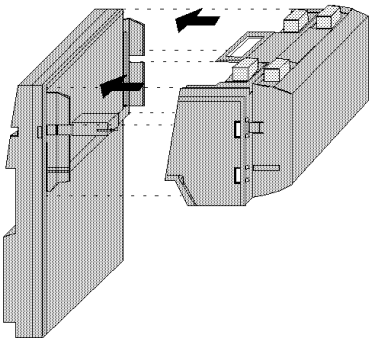
3	Push the assembled adapters onto the base, gently pressing the locking tabs inward. Snap #1 shown in the illustration below will not align properly with the mating slot in the I/O base unless the option adapter is placed straight onto the base. Do not attach just one latch and rotate the option adapter onto the I/O base. 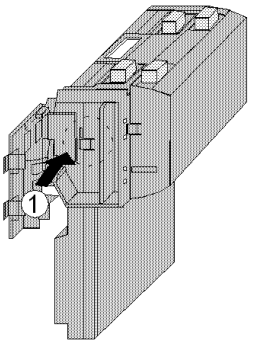 **Result:** The locking tabs on each side of the option adapter slide inside the I/O base and out through the locking slot. The 12-pin ATI connectors on the two units are mated to each other in the process.
4	Apply slight pressure to the top of the stirrup on the back of the option adapter so that it snaps into place on the bottom of the I/O base.

Disassembling a Module with an Option Adapter

Overview

The three-tiered assembly is designed to fit together tightly so it can withstand shock and vibration in an operating environment.

This section contains two procedures:
- removing the assembled adapters from the I/O base
- removing the option adapter from the processor

Tools Required

Flat-head screwdriver.

Procedure 1

Follow the steps in the table below to remove the assembled option adapter and M1 processor adapter from the I/O base.

Step	Action
1	Make sure that the power is off by removing the terminal connectors from the I/O base.
2	Remove the assembled unit from its wall or DIN rail mounting surface.

CAUTION

RISK OF DETERIORATION OF CIRCUITRY IN BATTERY COMPARTMENT

Use care when you insert a screwdriver in the battery compartment so that you do not scratch any exposed elements.

Failure to follow these instructions can result in equipment damage.

Step	Action
3	Open the battery door and use a flat-head screwdriver to release snaps 1 and 2 as shown in the illustration below. 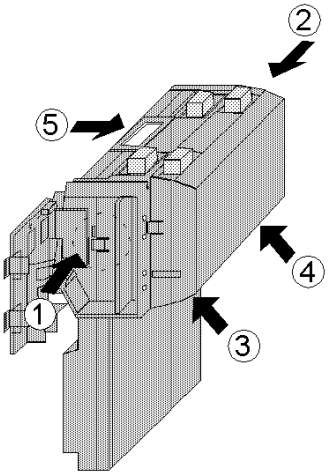
4	Once snaps 1 and 2 have been disengaged, use the screwdriver to release snaps 3 and 4 on the front of the assembly.
5	Gently lift the stirrup on the back of the option adapter with your fingers until it disengages from the bottom of the I/O base. Then lift the option adapter and M1 assembly from the I/O base. 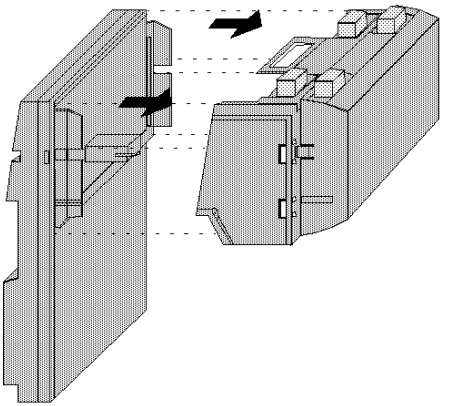
6	Follow the directions in the next procedure to remove the option adapter from the Processor.

Procedure 2

Follow the steps in the table below to remove the option adapter from the M1 processor.

Step	Action
1	Use a screwdriver to push the clips on both sides of the adapter inward. 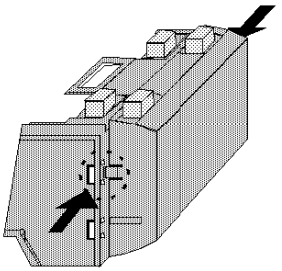
2	Lift off the adapter.

Using Terminal Connector Coding Keys

Overview

This section describes how to use terminal connector coding keys. It also provides an illustrated example of coded terminals.

How Coding Keys Work

Each I/O base has a series of slots into which you can insert one or more of the coding keys. Each terminal connector has a similar series of slots into which you can insert one or more of the coding tabs. When a key and a tab are inserted into slots that should mate, the I/O base and the connector cannot be physically connected.

NOTE: For maximum protection, key coding is required during installation.

Example

An example of a key-coded screw-in terminals is shown in the figure below.

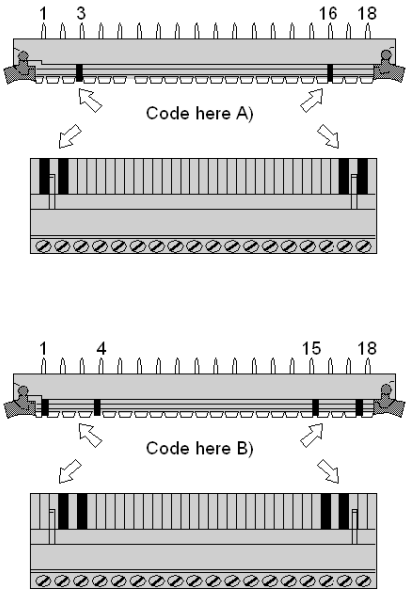

A) Coding for Voltage Range I (≤42.4 VAC / ≤60 VDC) e.g. 24 VDC
B) Coding for Voltage Range II (≥ 42.4 VAC / ≥ 60 VDC) e.g. 60 VDC

Inserting Terminal Connectors

Overview

⚠ DANGER

RISK OF ELECTRIC SHOCK

Make sure that power is not present while you are handling the coding keys on the I/O base and on the terminal connectors. Electrical voltages are present when the I/O base is under power.

Failure to follow these instructions will result in death or serious injury.

This section contains safety precautions and a diagram illustrating how to insert terminal connectors in a TSX Momentum I/O base.

Inserting a Terminal Connector

Install the terminal connectors by pushing them into the coded pin connectors (row 1 ... 3 of the I/O base).

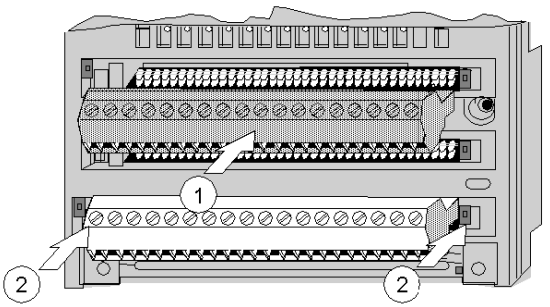

Removing a Terminal Connector

Overview

This section describes how to remove a terminal connector from a TSX Momentum I/O base.

Diagram

To remove a terminal connector, press the two tabs at the ends of the row (labeled 1 in the figure below).

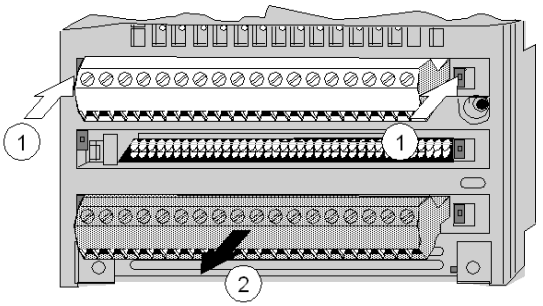

Attaching a Busbar

Overview

This section describes how to attach a busbar to an I/O base.

General

An optional busbar may be inserted into the fourth row of an I/O base. Busbars provide a common connection for the field devices and serve as protective distribution connectors, for instance to PE. Each row of terminals on the busbar is connected internally. There is no connection to the I/O base.

NOTE: See the internal pin connections and field wiring diagrams associated with your I/O base to determine whether or not you need a busbar and which busbar best suits your needs.

Busbar Types

Depending on the I/O base and the type and number of field devices to which it is connected, a 1-, 2-, or 3-row busbar may be used. Busbars are separately ordered items; they are not shipped with the I/O bases. They are available in either screw-in and spring-clip versions.

Screw Size

For a screw-in type busbar, use the two, self-tapping Phillips head machine screws provided, to fasten it to the I/O base.

Busbar Numbers

The following table provides ordering information on the different busbar types:

Busbar Type	Part Number	# of Rows	Wire Size
Screw-in	170 XTS 006 01	1	One or two wires up to 10 AWG (4 mm^2
	170 XTS 005 01	2	One or two wires up to 14 AWG (1.5 mm^2)
	170 XTS 004 01	3	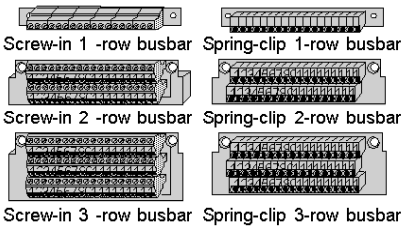
Spring-clip	170 XTS 007 01	1	
	170 XTS 008 01	2	
	170 XTS 003 01	3	

Labeling the Components in the Assembly

Overview

A fill-in label is shipped with each I/O base. This label should be attached to the face of the communication adapter or M1 processor adapter that you mount on that base.

This section describes the label and provides an illustrated example.

Fill-In Label

A completed label provides information about the assembled module and its I/O field devices that can be used by service and maintenance personnel.

The model number of the I/O base is pre-screened onto the fill-in label directly above the color code. The cutout area above the I/O model number allows the pre-screened model number of the adapter to show through.

NOTE: An option adapter may also be used in the assembled module. You will find its model number printed in the upper left corner of option adapter housing.

Example of a Fill-In Label

A sample fill-in label is illustrated in the diagram below. The numbered pointers in the diagram refer to the descriptions in the table that follows.

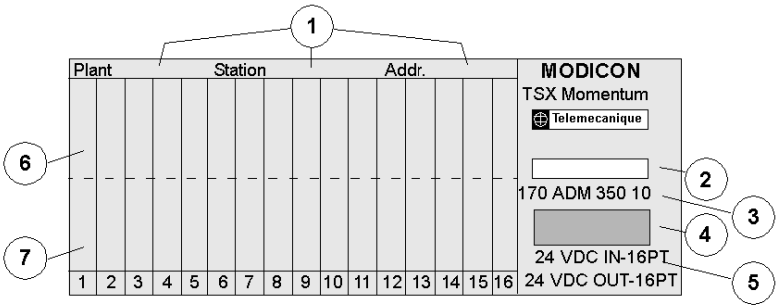

1 fields for plant name, station name and network address
2 cutout–the model number of the adapter shows through
3 model number of the I/O base
4 color code of the I/O base
5 short description of the I/O base
6 field for the symbol name of inputs
7 field for the symbol name of outputs

Dimensions and Mounting Instructions

4

Overview

This chapter gives dimensions of assembled TSX Momentum devices and describes how to mount them on a DIN rail or wall.

What's in this Chapter?

This chapter contains the following topics:

Topic	Page
Dimensions of Assembled TSX Momentum Devices	56
Standard Adapter on a Typical Base	57
Standard Adapter on a Discrete VAC Base	58
Processor and Option Adapter on a Typical Base	59
Processor and Option Adapter on a Discrete VAC Base	60
Mounting TSX Momentum Devices	61

Dimensions of Assembled TSX Momentum Devices

Overview

This section contains general information about the dimensions of TSX Momentuo assemblies.

Dimension Factors

The following factors influence the dimensions of the assembly:

- the type of I/O base
- use of an option adapter
- use of busbars

Mandatory Vertical Clearances

The vertical clearances illustrated in the dimension drawings must be maintained to assure proper heat dissipation.

Horizontal Clearances

In all cases, maintain 1 in of clearance between Momentum devices and the edge of the cabinet.

Standard Adapter on a Typical Base

Overview

This section provides dimensions for a standard processor adapter or communications adapter mounted on a typical analog or VDC I/O base.

Notes

The wiring from the terminal connectors dictates the minimum depth (60 mm) of this assembly.

The figure on the right shows an additional 30 mm length dimension for an optional three-row busbar.

Illustration

The following illustration shows dimensions for this assembly.

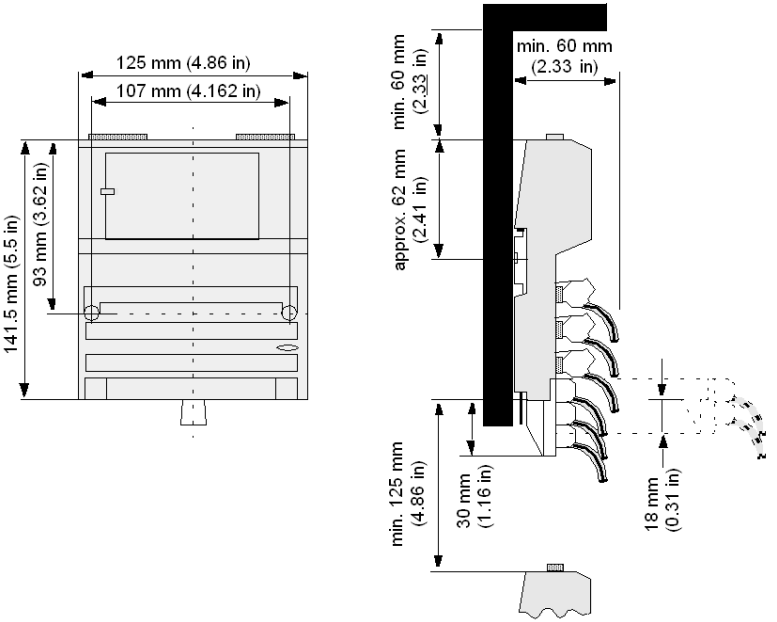

Standard Adapter on a Discrete VAC Base

Overview

If you are using a discrete VAC I/O base such as a 170 ADI 540 50 or a 170 ADO 540 50, refer to the drawing below for your dimensions.

Notes

The minimum depth dimension (65 mm) is determined by the unit housings, not the wiring terminals.

The figure on the right shows an addition 30 mm length dimension for an optional three-row busbar.

Illustration

The following illustration shows dimensions for this assembly.

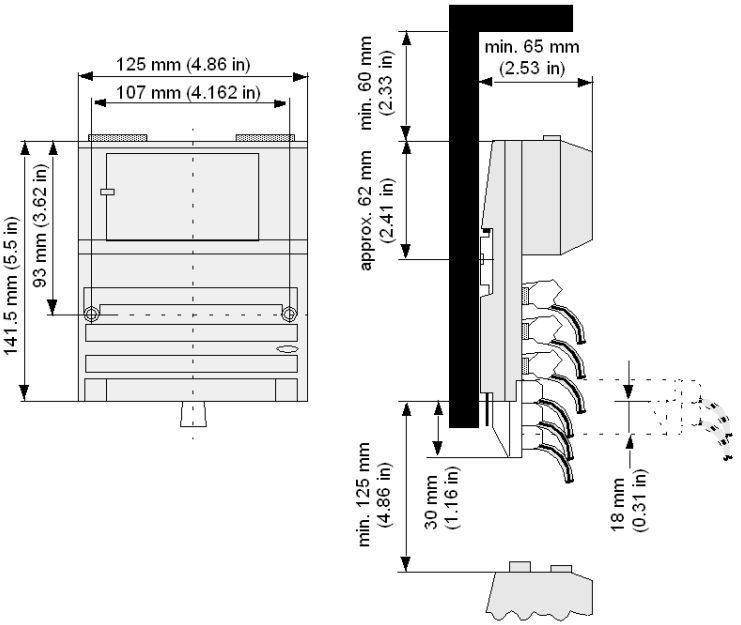

Processor and Option Adapter on a Typical Base

Overview

This section provides dimensions for a processor adapter and an option adapter mounted on a typical analog or VDC I/O base.

Notes

The option adapter adds to the width of this assembly (total 144 mm).

The figure on the right shows an addition 30 mm length dimension for an optional three-row busbar.

Illustration

The following illustration provides dimensions for this assembly.

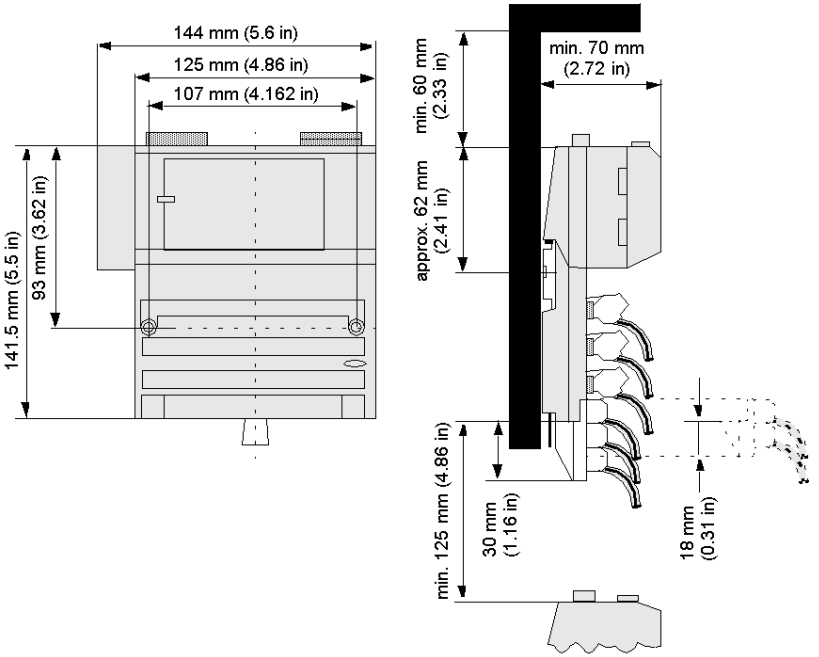

Processor and Option Adapter on a Discrete VAC Base

Overview

This section provides dimensions for using processor and option adapters with a discrete VAC base.

Notes

The minimum depth (75 mm) includes both the option adapter and the built-in extender ring on the I/O base.

The figure on the right shows an addition 30 mm length dimension for an optional three-row busbar.

Illustration

The following illustration shows dimensions for this assembly.

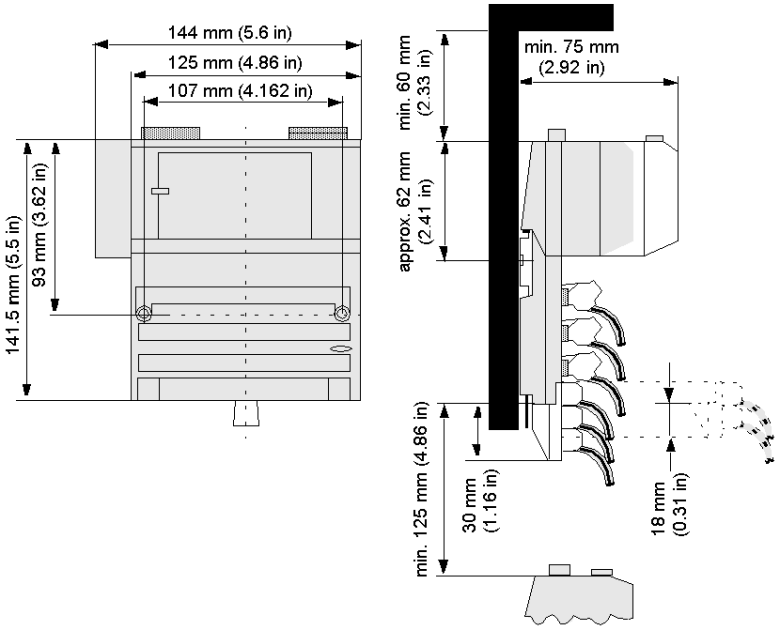

Mounting TSX Momentum Devices

Overview

This section contains guidelines for installation and drawings which illustrate how to mount a TSX Momentum assembly on a DIN rail or wall.

Guidelines

TSX Momentum components are designed as open equipment per IEC 1131-2, 1.4.20. Open equipment should be installed in industry-standard enclosures, and access should be restricted to authorized personnel.

Chassis Ground

Contact springs on the back of the I/O base establish electrical contact (chassis ground) with the DIN rail mounting track.

To establish chassis ground in a wall-mount situation, you will need to obtain two mounting screws for each unit. The body of the screws should be 4mm (0.16 in) in diameter and at least 25mm (0.97 in) long. The head of the screw must not exceed 8mm (0.31 in) in diameter.

Mounting on a DIN Rail

The numbers in the following illustration refer to the steps in the procedure below.

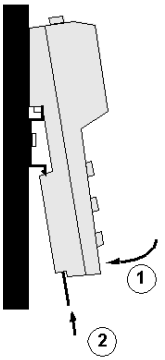

Procedure

Follow the steps in the table below to mount a TSX Momentum assembly on a DIN rail.

Step	Action
1	Hook the plastic tabs on the back of the device onto the DIN rail and swing the module down to rest against the rail.
2	Push the locking tab upward to secure the device in place.

Mounting on a Wall

Secure the device to the wall with two screws, as shown in the illustration below. The head of the screws must not exceed 8mm (0.31 in) in diameter.

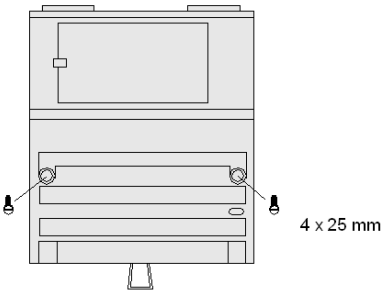

Power and Grounding Guidelines

5

Overview

This chapter provides information about power supplies, circuits, and grounding.

What's in this Chapter?

This chapter contains the following topics:

Topic	Page
Voltage Types	64
Structuring Your Power Supply System	65
Selecting Power Supplies	67
Single Power Supply Configuration	68
Protective Circuits for DC Actuators	70
Protective Circuits for AC Actuators	72
Grounding Momentum Devices	73
Grounding DIN Rail Terminals and Cabinets	75
Grounding Analog I/O Lines	76

Voltage Types

Overview

In planning your circuit layout, you must differentiate between operating voltage, input voltage, and output voltage.

Operating Voltage

The operating voltage feeds the internal logic of the individual I/O bases. (Abbreviations: L+ / M- for direct current; L1 / N for alternating current.)

Input Voltage

The input voltage supplies the sensors. (Abbreviations, where the leading numbers specify the groups: 1L+ / 1M-, 2L+ / 2M-, ... for direct current; 1L1 / 1N, 2L1 / 2N, ... for alternating current.)

Output Voltage

The output voltage drives the actuators. (Abbreviations equivalent to those for input voltage.)

Common Reference Potential

When two or more circuits have a common reference potential (i.e., they are not isolated), their corresponding reference conductors are abbreviated identically– for example, L+ / M- and 1L+ / M- are used when L+ and 1L+ are not isolated.

Structuring Your Power Supply System

Overview

This section contains guidelines for planning and wiring your power supply system.

Use Separate Power Supply for Outputs

Operating voltage and input voltage can be derived from one power supply (PS). We recommend that the output voltage be drawn from a separate power supply (e.g., 10 A or 25 A, referred to as PS1 and PS2).

A separate output voltage supply prevents interferences caused by switching processes from affecting the voltage supply to the electronics. Where larger output currents are involved, provide additional power supplies for the output voltage (PS3, ...).

Use Star Configuration

⚠ CAUTION

POTENTIAL FOR SHORT CIRCUITS AND/OR POWER-UP/POWER-DOWN SPIKES

Provide external fuses on the operating voltage to protect the module. Appropriate fuse values are shown in the wiring diagrams. An unprotected module may be subject to short circuits and/or power-up/power-down spikes.

Failure to follow these instructions can result in injury or equipment damage.

Each I/O base should be fed by the power supply in star configuration, i.e., separate leads from the power supply to each module.

Avoid Induction Loops

Do not create any induction loops. (This can be caused by laying out the supply conductors L+/M-, ... in pairs.) As a remedy, use twisted-pair wiring.

Avoid Series Connections

The series connections often found in automatic circuit breakers should be avoided since they increase the inductive component in the output-voltage leads.

Potential-Isolated Fieldbus Islands

The potential relationships of the bus adapters are designed so that the individual I/O stations form potential-isolated islands (e.g., by isolating the incoming remote bus of InterBus). To decide whether potential balancing is necessary, refer to the installation guidelines of the used communication adapter.

Selecting Power Supplies

Overview

This section provides guidelines for selecting power supplies.

Using Three-Phase Bridges

⚠ CAUTION

RISK OF ELECTRICAL SHOCK

Do electrically isolate the AC-to-DC converter between the input (primary) and output (secondary). Otherwise, voltage levels can be propagated to the output if the AC-to-DC converter fails.

Failure to follow these instructions can result in injury or equipment damage.

Unfiltered three-phase bridges can be used in 24 VDC power supplies for the I/O bases, the sensors, and the actuators. In view of the maximum permissible ripple of 5%, monitoring for phase failure is necessary. For single-phase rectification, the 24 VDC must be buffered to ensure conformance to the specifications in System Specifications *(see page 665)* (20...30V; max. ripple 5 %).

Provide Reserve Capacity

Startup transients, extra long cables, and low cross-sectional efficiency can lead to voltage supply breakdowns. Therefore, you should select power supplies with enough reserve capacity and select the proper cable lengths and cross sections.

Single Power Supply Configuration

Overview

This section contains illustrations of a sample circuit layout, potential bundling, and potential isolation for a single power supply configuration.

Fusing in Circuit Layout

Each of the following circuit branches must be fuse-protected (F in the figure below). In the case of long lines, the circuit branch must be provided with a suppressor circuit OVP 001/OVP 248. This protection selectively shuts off a circuit branch through the associated fuse even if the diode is short-circuited.

Illustration

The following illustration shows a sample circuit layout for a single power supply configuration.

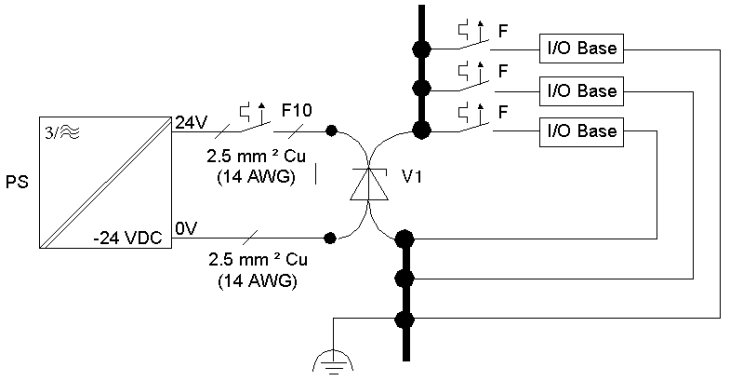

F automatic circuit breaker or fuse (see appropriate field wiring illustration in I/O base description)
F10 optional circuit breaker (with over-voltage protection)
PS power supply 24 VDC, max. 25 A
V1 overvoltage protection circuit OVP 001, OVP 002

Fusing in Wiring Illustrations

The fuses shown in the illustrations below must be selected on the basis of the type and number of the sensors and actuators used.

Potential Bundling

In this example, the output voltage is drawn from a separate power supply.

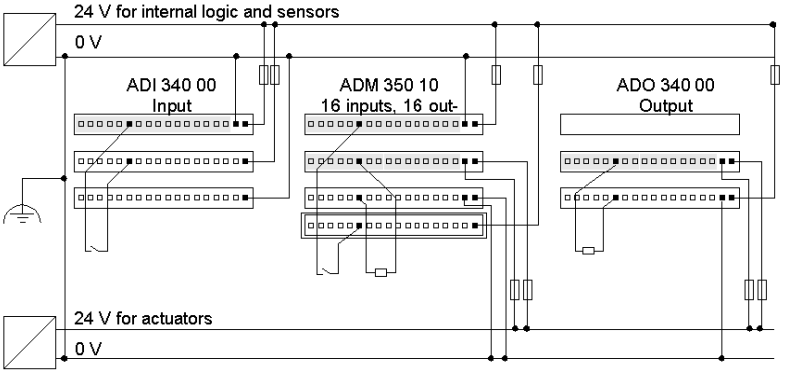

Potential Isolation

In this example, the output voltage is drawn from a separate power supply

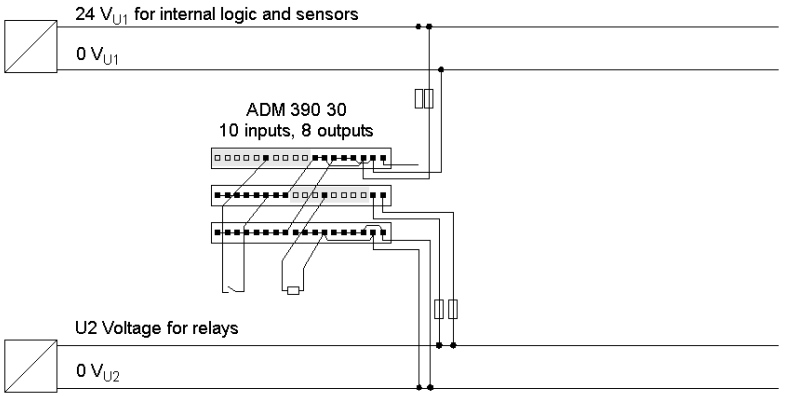

Protective Circuits for DC Actuators

Overview

This section discusses specific cases when inductive loads at output points require additional protective circuits (directly on the actuator) and provides two examples of protective circuitry.

Case 1

When there are contacted circuit elements (e.g. for safety interlocks) in the output conductors.

Case 2

When the leads are very long.

Case 3

Where inductive actuators are operated via relay contacts of the I/O base (to extend contact life and for EMC considerations).

Protective Circuit Types

In all three cases, the protective circuit is a clamping diode.

The following table provides generic selection guidelines.

Type of Load	Suppression Device	Minimum Component Rating
DC circuits	a reverse-biased clamping diode across the load	2 A and greater than twice the maximum load voltage

Consult relay and contactor manufacturers' catalogs for commercial suppression devices matched to your particular products.

Example 1

An example of a protective circuit for inductive DC actuators is illustrated below:

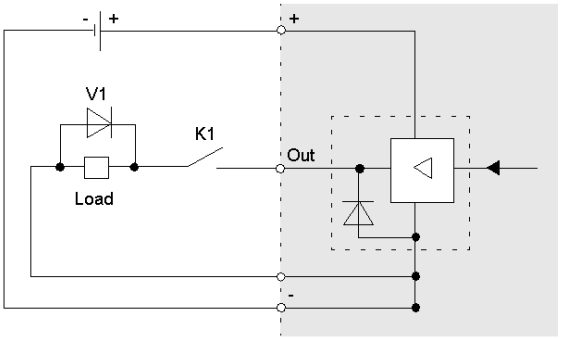

K1 contact, e.g., for safety interlocks
V1 clamping diode as the protective circuit

Example 2

Another example of a protective circuit for inductive DC actuators is illustrated below:

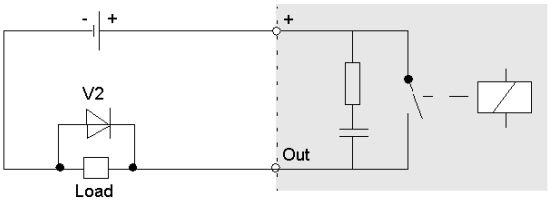

V2 clamping diode as the protective circuit

Protective Circuits for AC Actuators

Overview

To reduce noise potentials and for EMC considerations you may need to equip the inductive actuators with noise suppressors, e.g., anti-interference capacitors, at the point of interference.

Protective Circuit Types

The following table provides generic selection guidelines.

Type of Load	Suppression Device	Minimum Component Rating	
AC circuits	50 Ω resistor in series with a 0.47 µfd nonpolarized capacitor across the load	for 120 VAC-powered loads	200 VAC
		for 220 VAC-powered loads	400 VAC

Consult relay and contactor manufacturers' catalogs for commercial suppression devices matched to your particular products.

Example

An example of a protective circuit for inductive AC actuators is illustrated below:

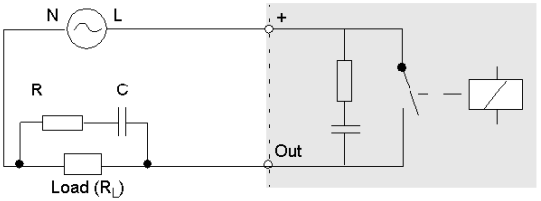

Grounding Momentum Devices

Overview

This section describes how to provide two types of grounding for assembled Momentum devices:

- functional earth (FE), used to discharge high frequency disturbances, guaranteeing proper EMC behavior
- protective earth (PE), used to protect against personal injuries according to IEC and VDE

Grounding Momentum Devices

Momentum devices consist of an I/O base assembled with a communications adapter or a processor adapter and possibly an option adapter. The PE of the adapters is electrically connected with the PE of the I/O base; you do not have to provide any further grounding of the adapter.

Grounding Guidelines

Follow these guidelines.

- Be sure you establish good ground contacts.
- Connect the grounding screw to protective earth (PE) for AC and DC modules with a recommended maximum torque of 4.4 in/lb (0.5 Nm) using a PZ2 driver.

Cable Specifications

When you are using ground cable up to 10 cm (4 in) long, its diameter should be at least 12 AWG (or 2.5 mm^2). When longer cables are used, larger cable diameters are required, as shown in the following illustration.

Grounding Scheme

The illustration below illustrates properly grounding modules and tracks.

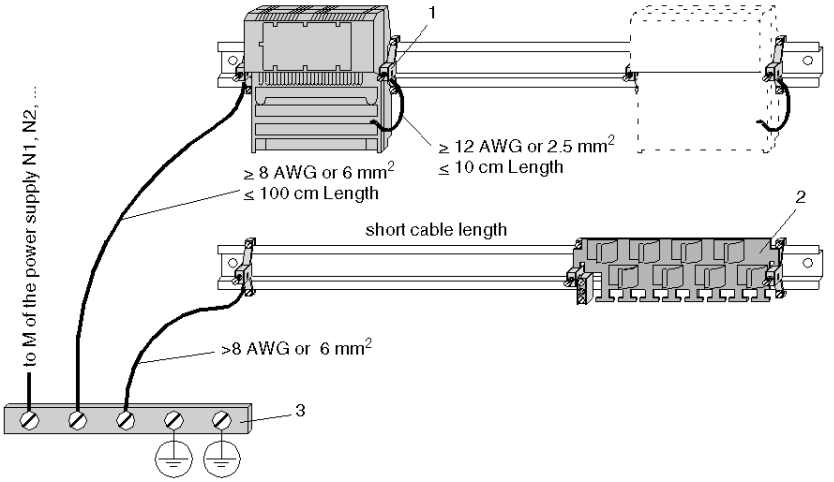

1 grounding clamp, such as EDS 000
2 cable grounding rail (CER 001), an optional component for grounding lines close to PE/FE rail
3 PE/FE rail in the cabinet or PE/FE screw in terminal cabinet

NOTE: The lower DIN rail shows a cable grounding rail (CER 001), an optional component for grounding analog lines. For a procedure for grounding analog I/O lines, see Grounding Analog I/O Lines *(see page 76)*.

Grounding DIN Rail Terminals and Cabinets

Overview

This section shows how to ground DIN rail terminals and cabinets.

Illustration

The following illustration shows how to ground DIN rail terminals and cabinets:

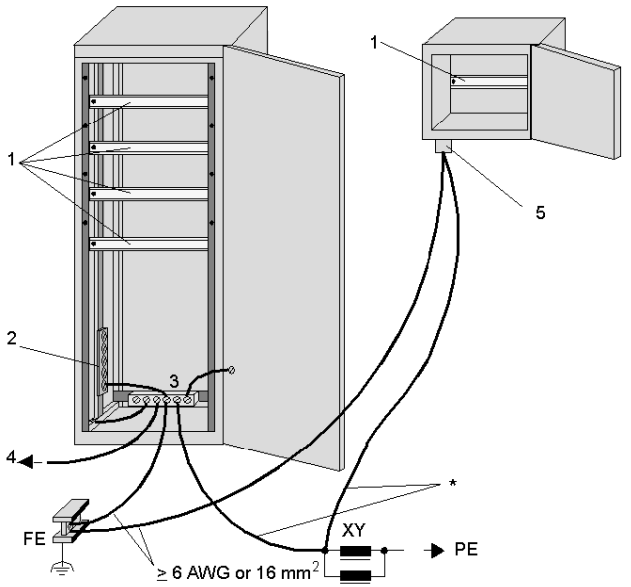

1 DIN rail for connecting the Momentum device and its accessories
2 reference conductor system or rail (solid copper or connected terminals)
3 grounding bar in the cabinet
4 next cabinet
5 grounding screw (PE/FE) in cabinet
FE functional earth
PE protective earth
XY protective earth choke
***** conductor cross section depends on the load of the system

Grounding Analog I/O Lines

Overview

Analog wires must be grounded directly when entering the cabinet. You may use commercial cleats or clamps or an analog cable grounding rail. This section describes both approaches.

Principle

High frequency interference can only be discharged via big surfaces and short cable lengths.

Guidelines

Follow these wiring guidelines:

- Use shielded, twisted-pair cabling
- Expose the shielding on one side (for instance, at the console exit)
- Make sure the track is properly grounded *(see page 73)*

Grounding of the bus cable is determined by the bus adapter used. Look for details in your *bus adapter manual*.

Using Cleats or Clamps

Cleats or clamps can be mounted directly on the ground rail (PE/FE rail) in the cabinet, as shown in the illustration below. Be sure the cleats or clamps make proper contact.

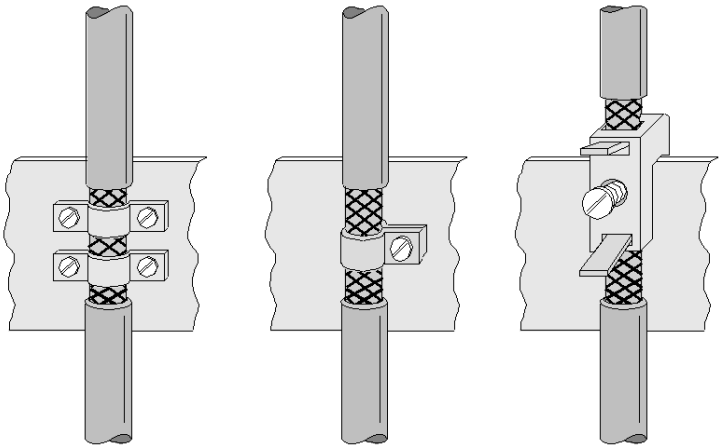

I/O Base Descriptions

II

Purpose

This part provides descriptions of each I/O base.

What's in this Part?

This part contains the following chapters:

Chapter	Chapter Name	Page
6	170 AAI 030 00 Analog 8 Channel Differential Input Module Base	79
7	170 AAI 140 00 Analog 16 Channel Single-Ended Input Module Base	97
8	170 AAI 520 40 Analog 4 Channel RTD, Therm. and mV Input Module Base	113
9	170 AAO 120 00 Analog 4 Channel Output Module Base +/- 10 V, 0 - 20 mA	139
10	170 AAO 921 00 Analog 4 Channel Output Module Base +/- 10 V, 4 ... 20 mA	155
11	170 ADI 340 00 24 VDC - 16 Pt. Discrete Input Module Base	169
12	170 ADI 350 00 24 VDC - 32 Pt. Discrete Input Module Base	183
13	170 ADI 540 50 120 VAC - 16 Point Discrete Input Module Base	197
14	170 ADI 740 50 230 VAC - 16 Point Discrete Input Module Base	211
15	170 ADM 350 10 24 VDC - 16 Pt. In / 16 Pt. Out Module Base	225
16	170 ADM 350 11 24 VDC - 16 Pt. In / 16 Pt. Out Module Base	243
17	170 ADM 350 15 24 VDC - 16 Pt. In / 16 Pt. Out Module Base	261
18	170 ADM 370 10 24 VDC - 16 Pt. In / 8 Pt. Out @ 2 Amp. Module Base	275
19	170 ADM 390 10 24 VDC - 16 Pt. In / 12 Pt. Out Monitored Module Base	293

Chapter	Chapter Name	Page
20	170 ADM 390 30 24 VDC - 10 Pt. In / 8 Pt. Relay Out Module Base	309
21	170 ADM 390 31 24 VDC - 10 Pt. In / 8 Pt. Relay Out Module Base	325
22	170 ADM 540 80 120 VAC - 6 Pt. In / 3 Pt. Out Discrete MCC Module Base	341
23	170 ADM 690 50 120 VAC - 10 Pt. In / 8 Pt. Out Module Bases	371
24	170 ADM 690 51 120 VAC - 10 Pt. In / 8 Pt. Out Module Bases	387
25	170 ADM 850 10 10 to 60 VDC Module Base	403
26	170 ADO 340 00 24 VDC - 16 Pt. Discrete Output Module Base	421
27	170 ADO 350 00 24 VDC - 32 Pt. Discrete Output Module Base	435
28	170 ADO 530 50 120 VAC - 8 Point Discrete Output @ 2A Module Base	449
29	170 ADO 540 50 120 VAC - 16 Point Discrete Output Module Base	465
30	170 ADO 730 50 230 VAC - 8 Point Discrete Output @ 2A Module Base	481
31	170 ADO 740 50 230 VAC - 16 Point Discrete Output Module Base	497
32	170 ADO 830 30 6 Pt. Relay Out Module Base	513
33	170 AMM 090 00 Analog 4 Ch. In / 2 Ch. Out Module Base w/ 24 VDC I/O Pts	527
34	170 AMM 090 01 Analog 4 Ch. In / 2 Ch. Out Module Base w/ 12 VDC I/O Pts	557
35	170 ANR 120 90 Unipolar Analog 6 Ch. In / 4 Ch. Out Module Base with 24 VDC I/O Points	587
36	170 ANR 120 91 Bipolar Analog 6 Ch. In / 4 Ch. Out Module Base with 24 VDC I/O Points	611
37	170 ARM 370 30 24 VDC - 10 Pt. In / 8 Pt. Relay Out Module Base (120 VAC Powered)	635
38	170 CPS 111 00 TIO Power Supply Module	651

170 AAI 030 00 Analog 8 Channel Differential Input Module Base

6

Overview

This chapter describes the 170 AAI 030 00 TSX Momentum I/O base.

What's in this Chapter?

This chapter contains the following topics:

Topic	Page
Front Panel Components	80
Specifications	82
Internal Pin Connections	84
Field Wiring Guidelines	85
Wiring Illustrations	87
I/O Mapping	88
Analog Channel Parameters	89
Analog Inputs	91
Input Measuring Ranges	93

Front Panel Components

Overview

This section contains an illustration of the front panel of the 170 AAI 030 00 I/O base and a description of the LEDs.

Front Panel Illustration

The front panel of the I/O base is shown in the illustration below.

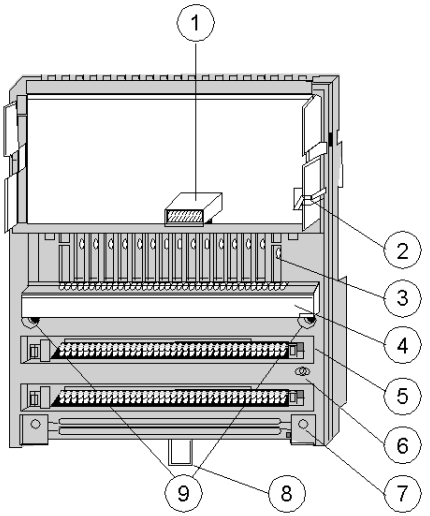

Components of the I/O module

Label	Description
1	Internal interface (ATI) connector
2	Locking and ground contact for the adapter
3	LED status display
4	Protective cover
5	Sockets for the terminal connectors
6	Grounding screw
7	Busbar mounting slot
8	Locking tab for DIN rail mount
9	Mounting holes for panel mount

LED Illustration

This I/O base has one LED, the ready indicator shown in the illustration below.

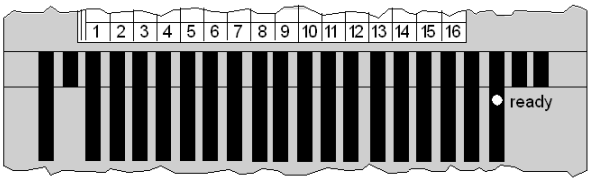

LED Descriptions

The ready indicator is described in the table below.

Indicator	Condition	Message
Ready	Green	Module is ready to communicate. Operating voltage for internal logic is present and self-test has been passed.
	Off	Module is not ready. Operating voltage is not present or module is defective.

Specifications

Overview

This section contains specifications for the 170 AAI 030 00 I/O base.

General Specifications

Module type	8 analog inputs
Input voltage range	+/- 10 V, +/- 5 V, 1 ... 5 V
Input current range	+/- 20 mA, 4 ... 20 mA
Supply voltage	24 VDC
Supply voltage range	20 ... 30 VDC
Supply current consumption	max. 362 mA at 24 VDC
Power dissipation	3.73 W typical 6.58 W maximum
I/O map	8 input words 2 output words

Isolation

Between channels	140 VAC Hz or 200 VDC, 1 min
Between input channels and ground	500 VAC

Fuses

Internal (not user-replaceable)	2 A slow-blow
External (recommended)	1 A slow-blow (Bussmann GDC-1A or equivalent)

EMC

Immunity	IEC 1131-2 Surge on auxiliary power supply 500 V
Emissions	EN 50081-2
Agency approvals	UL, CSA, CE, FM Class 1 Div.2 pending

Physical Dimensions

Width	125 mm (4.9 in)
Depth (with no adapter)	40 mm (1.54 in)
Length	141.5 mm (5.5 in) no busbar
Weight	215 g (0.45 lb)

Analog Inputs

Surge tolerance: input voltage input current	 +/- 30 VDC +/- 25 mA
Number of channels	8
Format of transmitted data	full 16 bits signed (2's complement)
Protection	polarity inversion
Error indication	none
Common mode rejection	250 VAC @ 47 ... 63 Hz or 100 VDC channel-to-ground
Update time for the inputs (in ms)	1.33 + n x 1.33 n = number of declared channels
Filtering	low pass with cutoff frequency 18 kHz

Range Specific Data

Range	**+/- 10 V**	**+/- 5 V**	**1 ... 5 V**	**+/- 20 mA**	**4 ... 20 mA**
Input impedance	20 MOhm	20 MOhm	20 MOhm	250 Ohm	250 Ohm
Error at 25 deg. C	0.27% PE*	0.21% PE*	0.13% PE*	0.32% PE*	0.28% PE*
Error at 60 deg. C	0.32% PE*	0.26% PE*	0.19% PE*	0.41% PE*	0.38% PE*
Temperature drift (60 deg. C)	14 ppm PE*/ deg. C	14 ppm PE*/ deg. C	18 ppm PE*/ deg. C	24 ppm PE*/ deg. C	30 ppm PE*/ deg. C
Resolution	14 bits + sign	14 bits + sign	15 bits	14 bits + sign	15 bits

NOTE: *Not to be confused with Protective Earth. PE is used here as a European notation for full scale, with the following values:

- 10 V in range of +/- 10 V
- 5 V in range of +/- 5 V
- 4 V in range of 1 ... 5 V
- 20 mA in range of +/- 20 mA
- 16 mA in range of 4 ... 20 mA

Internal Pin Connections

Overview

This section contains an illustration showing the internal connections between terminals on the I/O base.

Illustration

The following illustration shows the internal connections between terminals.

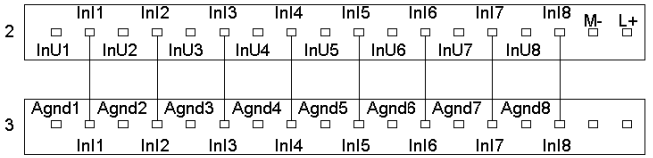

Field Wiring Guidelines

Overview

This section contains wiring guidelines and precautions.

Required Terminal Connector

To connect field devices to the I/O base, you need a field wiring terminal connector. Schneider Electric sells terminal connectors in sets of three.

Type	Part Number
Screw-in	170 XTS 001 00
Spring-clip	170 XTS 002 00

Mapping Terminal Blocks

⚠ CAUTION

POTENTIAL FOR SHORT CIRCUITS AND/OR POWER-UP SPIKES

Provide external fuses on the operating voltage to protect the module. Appropriate fuse values are shown in the wiring illustration. An unprotected module may be subject to short circuits and/or power-up spikes.

Failure to follow these instructions can result in injury or equipment damage.

Mapping terminal blocks are described in the table below.

Row	Terminal No.	Description	Function
2	1, 3, 5, 7, 9,11, 13, 15	InU1 ... InU8	Voltage input, channel 1 ... 8
	2, 4, 6, 8, 10, 12, 14, 16	InI1 ... InI8	Current input, channel 1 ... 8
	17	M-	- return (of operating voltage)
	18	L+	+ 24 VDC Operating voltage
3	1, 3, 5, 7, 9,11, 13, 15	Agnd1 ... Agnd8	Analog ground, channel 1 ... 8
	2, 4, 6, 8, 10, 12, 14, 16	InI1 ... InI8	Current input, channel 1 ... 8

Signal Protection

To protect the signal from external noise induced in serial or common mode, we recommend the following precautions.

- Use shielded twisted-pair cables with a minimum conductor size of 24 AWG or 0.22 mm^2.
- Connect the cable shield to ground via the cable grounding rail (part number CER 001).
- You may combine the analog inputs on this I/O base in one multi-pair cable provided the same ground is used.
- When wiring the voltage supply, use sensors that do not have ground reference.

Wiring Illustrations

Overview

This section contains an illustration to assist you in wiring the I/O base.

Illustration

The illustration below shows an example of wiring for voltage input and for current input.

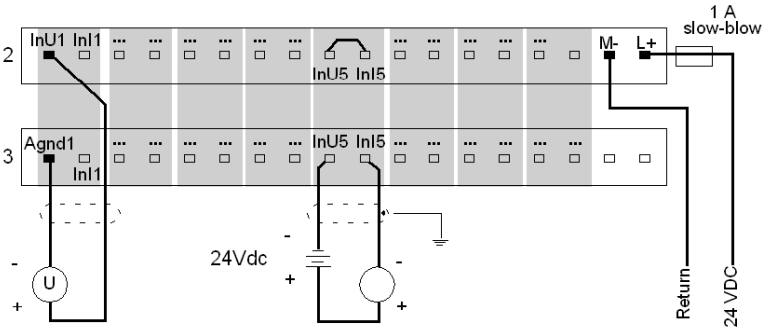

Examples
* Channel1, wired for voltage input
* Channel 5, wired for current input

I/O Mapping

Overview

The 170 AAI 030 00 TSX Momentum I/O base supports 8 analog inputs. This section contains information about the mapping of the analog input values into input words and the usage of output words for channel configuration.

I/O Map

The I/O base must be mapped as eight contiguous input words and two contiguous output words, as follows:

Word	Input Data	Output Data
1	Value, input channel 1	Parameters for input channels 1 ... 4
2	Value, input channel 2	Parameters for input channels 5 ... 8
3	Value, input channel 3	Not used
4	Value, input channel 4	Not used
5	Value, input channel 5	Not used
6	Value, input channel 6	Not used
7	Value, input channel 7	Not used
8	Value, input channel 8	Not used

Analog Channel Parameters

Overview

Parameters must be set for all of the analog channels before the module can be commissioned. This section provides the codes for setting the parameters and gives examples of parameter settings.

NOTE: If you set new parameters for the module, always send a complete set of parameters (all channels, inputs and outputs), even if you only want to change a single parameter. Otherwise the module will refuse the new parameters and continue working with the old ones.

Key

This section focuses on output words 1 and 2, as highlighted in the table below:

Word	Input Data	Output Data
1	Value, input channel 1	**Parameters for input channels 1 ... 4**
2	Value, input channel 2	**Parameters for input channels 5 ... 8**
3	Value, input channel 3	Not used
4	Value, input channel 4	Not used
5	Value, input channel 5	Not used
6	Value, input channel 6	Not used
7	Value, input channel 7	Not used
8	Value, input channel 8	Not used

Illustration

Parameters are set by entering a four-bit code in output words 1 and 2, as follows:

Output Word 1 (Register 4*x*)															
15	14	13	12	11	10	9	8	7	6	5	4	3	2	1	0
for input channel 4				for input channel 3				for input channel 2				for input channel 1			

Output Word 2 (Register 4*x*+1)															
15	14	13	12	11	10	9	8	7	6	5	4	3	2	1	0
for input channel 8				for input channel 7				for input channel 6				for input channel 5			

Codes for Analog Input Parameters

Use the following codes to set the parameters for each analog input channel:

Code (binary)	Code (hex)	Parameter
0000	0	Reserved value (see note below)
0010	2	+/-5V and +/-20mA input range
0011	3	+/-10V input range
0100	4	Channel inactive
1010	A	1 ... 5V and 4 ... 20 mA input range

NOTE: The 0000 reserved value is more a control than a parameter. It forces the I/O base into a default condition where it continues to receive field inputs according to the previous channel parameters.

Analog Inputs

Overview

This section describes how to interpret the value of the analog input channels.

Key

This section describes input words 1 ... 8, as highlighted in the table below:

Word	Input Data	Output Data
1	**Value, input channel 1**	Parameters for input channels 1 ... 4
2	**Value, input channel 2**	Parameters for input channels 5 ... 8
3	**Value, input channel 3**	Not used
4	**Value, input channel 4**	Not used
5	**Value, input channel 5**	Not used
6	**Value, input channel 6**	Not used
7	**Value, input channel 7**	Not used
8	**Value, input channel 8**	Not used

Bit Assignments

The following table tells how bits are assigned:

Analog-to-digital conversion	Carried out on 14 bits + sign for bipolar input ranges,15 bits for unipolar ranges
Bit 15	Sign bit
Bits 14 ... 0	Input channel values

Analog Input Values

Mapping of analog input values is shown below.

Input Word 1 (Register 3*x*, analog value returned on channel 1)															
15	14	13	12	11	10	9	8	7	6	5	4	3	2	1	0

Input Word 2 (Register 3*x*+1, analog value returned on channel 2)															
15	14	13	12	11	10	9	8	7	6	5	4	3	2	1	0

Input Word 3 (Register 3*x*+2, analog value returned on channel 3)															
15	14	13	12	11	10	9	8	7	6	5	4	3	2	1	0

Input Word 8 (Register 3*x*+7, analog value returned on channel 8)															
15	14	13	12	11	10	9	8	7	6	5	4	3	2	1	0

Broken Wire Indication

Broken wire detection is possible for the 4 ... 20 mA range. In this case, a current signal that is less than 2 mA on one of the inputs is detected as a broken wire. The input word of that channel returns the signed value -32,768. A broken wire indication has the following binary format:

Broken wire indication in an input word															
1	0	0	0	0	0	0	0	0	0	0	0	0	0	0	0

Input Measuring Ranges

Overview

This section contains illustrations explaining the analog/digital relation for the three input measuring ranges.

+/- 10 V

The following illustration shows the analog/digital relation at +/- 10 V:

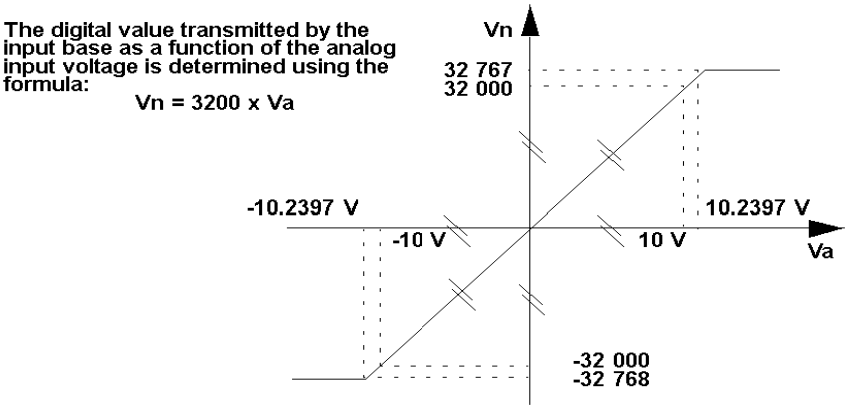

+/- 5 V

The following illustration shows the analog/digital relation at +/- 5 V:

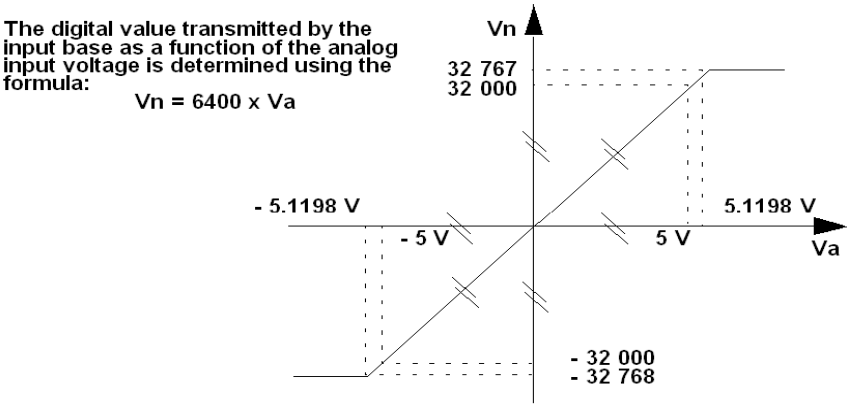

+/- 20 mA

The following illustration shows the analog/digital relation for the input measuring range +/- 20 mA

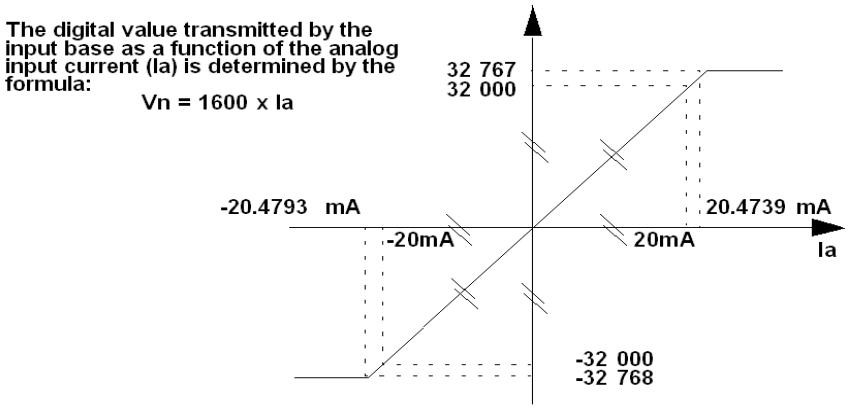

1 ... 5 V

The following illustration shows the analog/digital relation for the input measuring range 1 ... 5 V.

The digital value transmitted by the input base as a function of the input voltage (Va) is determined by the formula:

Vn = 8000 x Va - 8000
in the voltage range:
0.9041 ... 5.0959

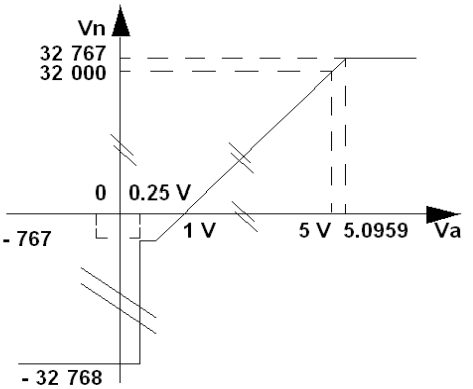

4 ... 20 mA

The following illustration shows the analog/digital relation at 4 ... 20 mA current:

The digital value transmitted by the input base as a function of the input current (Ia) is determined using the formula:

Vn = 2000 x Ia - 8000
in the current range:
3.6165 ... 20.3835 mA

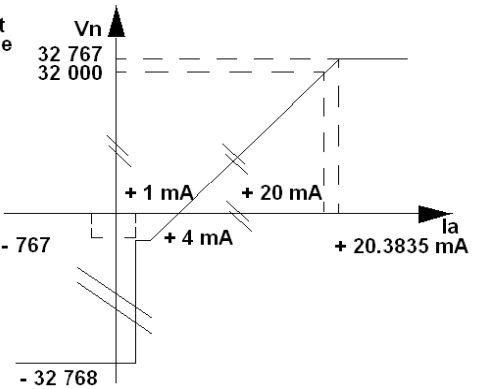

170 AAI 140 00 Analog 16 Channel Single-Ended Input Module Base

7

Overview

This chapter describes the 170 AAI 140 00 TSX Momentum I/O base.

What's in this Chapter?

This chapter contains the following topics:

Topic	Page
Front Panel Components	98
Specifications	100
Internal Pin Connections	102
Field Wiring Guidelines	103
Wiring Diagrams	105
I/O Mapping	106
Analog Channel Parameters	107
Analog Inputs	109
Input Measuring Ranges	111

Front Panel Components

Overview

This section contains an illustration of the front panel of the 170 AAI 140 00 I/O base and a description of the LEDs.

Front Panel Illustration

The front panel of the I/O base is shown in the illustration below.

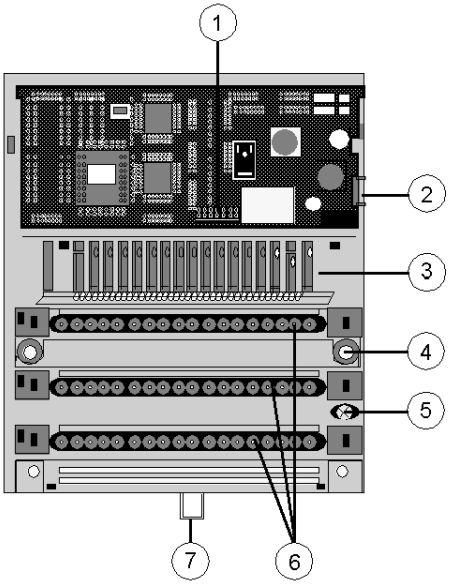

Label	Description
1	Internal interface (ATI) connector
2	Locking and ground contact for the adapter
3	LED status display
4	Mounting holes for panel mount
5	Grounding screw
6	Sockets for the terminal connectors
7	Locking tab for DIN rail mount

LED Illustration

This I/O base has one LED, the ready indicator shown in the illustration below.

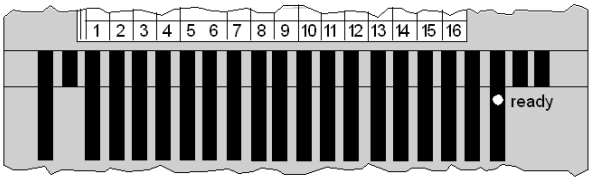

LED Descriptions

The ready indicator is described in the table below.

Indicator	Condition	Message
Ready	Green	Module is ready to communicate. Operating voltage for internal logic is present and self-test has been passed.
	Off	Module is not ready. Operating voltage is not present or module is defective.

Specifications

Overview

This section contains specifications for the 170 AAI 140 00 I/O base.

General Specifications

Module type	16 analog inputs
Input voltage range	+/- 10 V, +/- 5 V
Input current range	4 ... 20 mA
Field device output driving capability	6K or less
Supply voltage	24 VDC
Supply voltage range	20 ... 30 VDC
Supply current consumption	max. 305 mA at 24 VDC
Power dissipation	4.95 W typical 5.55 W maximum
I/O map	16 input words 4 output words

Isolation

Between channels	none
Between base supply and ground	500 VDC, 1 min
Between input channels and ground	500 VAC, 1 min

Fuses

Internal (not user-replaceable)	2 A slow-blow
External (recommended)	1 A slow-blow (Bussmann GDC-1A or equivalent)

EMC

Immunity	IEC 1131-2 Surge on auxiliary power supply 500 V
Emissions	EN 50081-2
Agency approvals	UL, CSA, CE, FM Class 1 Div. 2

Physical Dimensions

Width	125 mm (4.9 in)
Depth (with no adapter)	40 mm (1.54 in)
Length	141.5 mm (5.5 in) no busbar
Weight	215 g (0.45 lb)

Analog Inputs

Surge tolerance: input voltage input current	 +/- 30 VDC +/- 25 mA
Number of channels	16
Format of transmitted data	full 16 bits signed (2's complement)
Protection	polarity inversion
Error indication	none
Common mode rejection	250 VAC @ 47 ... 63 Hz or 100 VDC channel-to-ground
Update time for the inputs (in ms)	1 + 1.5 xn n = number of declared channels
Filtering	low pass with cutoff frequency 10 kHz
Maximum Sensor Impedance In	6K ohms with AAI 14000 at PV02
Voltage Mode	1.5K ohms with AAI 14000 at PV01

Range Specific Data

Range	**+/- 10 V**	**+/- 5 V**	**4 ... 20 mA**
Input impedance	20 MOhm	20 MOhm	250 Ohm
Error at 25 deg. C	0.27% PE*	0.21% PE*	0.28% PE*
Error at 60 deg. C	0.32% PE*	0.26% PE*	0.38% PE*
Temperature drift (60 deg. C)	14 ppm PE*/ deg. C	14 ppm PE*/ deg. C	30 ppm PE*/ deg. C
Resolution	14 bits + sign	14 bits + sign	15 bits

NOTE: *Not to be confused with Protective Earth. PE is used here as a European notation for full scale, with the following values:

- 10 V in range of +/- 10 V
- 5 V in range of +/- 5 V
- 16 mA in range of 4 ... 20 mA

Internal Pin Connections

Overview

This section contains an illustration showing the internal connections between terminals on the I/O base.

Illustration

The following illustration shows the internal connections between terminals.

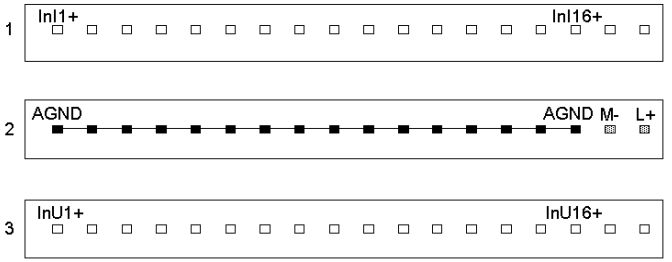

Field Wiring Guidelines

Overview

This section contains wiring guidelines and precautions.

Required Terminal Connector

To connect field devices to the I/O base, you need a field wiring terminal connector. Schneider Electric sells terminal connectors in sets of three.

Type	Part Number
Screw-in	170 XTS 001 00
Spring-clip	170 XTS 002 00

Mapping Terminal Blocks

⚠ CAUTION

POTENTIAL FOR SHORT CIRCUITS AND/OR POWER-UP SPIKES

Provide external fuses on the operating voltage to protect the module. Appropriate fuse values are shown in the wiring illustration. An unprotected module may be subject to short circuits and/or power-up spikes.

Failure to follow these instructions can result in injury or equipment damage.

Mapping terminal blocks is described in the table below

Row	Terminal No.	Description	Function
1	1 ... 16	InI1+ ... InI16+	Input current mode, channel 1 ... 16
	17, 18	-	Not used
2	1 ... 16	AGND	Analog ground connections (0 V input)
	17	M-	- Return (of operating voltage)
	18	L+	+ 24 VDC Operating voltage
3	1 ... 16	InU1+ ... InU16+	Input voltage mode, channel 1 ... 16
	17, 18	-	Not used

Signal Protection

To protect the signal from external noise induced in serial or common mode, we recommend the following precautions.

- Use shielded twisted-pair cables with a minimum conductor cross section of 24 AWG or 0.22 mm^2.
- Connect the cable shield to ground via the cable grounding rail (part number CER 001).
- You may combine the analog inputs on this I/O base in one multi-pair cable provided the same ground is used.
- When wiring the voltage supply, use sensors that do not have ground reference.

Wiring Diagrams

Overview

This section contains a diagram to assist you in wiring this I/O base for voltage input and current input.

Diagram

The diagram below shows an example of wiring for voltage input and for current input.

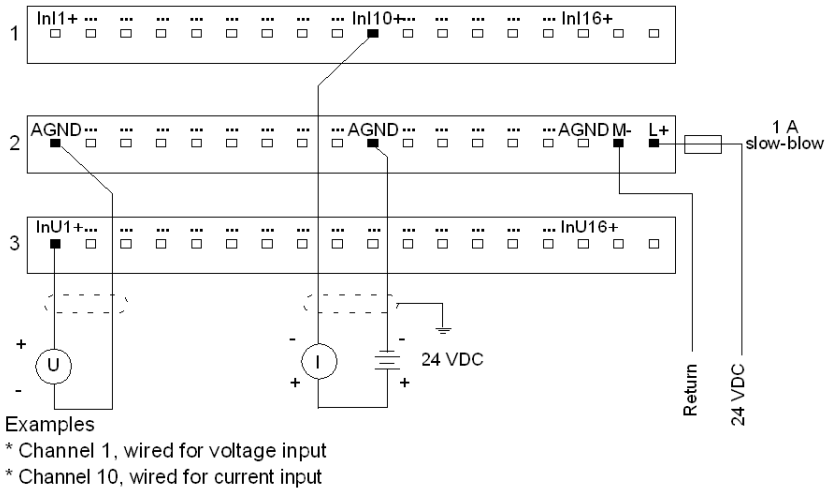

I/O Mapping

Overview

The 170 AAI 140 00 TSX Momentum I/O base supports 16 analog inputs. This section contains information about the mapping of the analog input values into input words and the usage of output words for channel configuration.

I/O Map

The I/O base must be mapped as 16 contiguous input words and four contiguous output words, as follows:

Word	Input Data	Output Data
1 = LSW	Value, input channel 1	Parameters for input channels 1 ... 4
2	Value, input channel 2	Parameters for input channels 5 ... 8
3	Value, input channel 3	Parameters for input channels 9 ... 12
4	Value, input channel 4	Parameters for input channels 13 ... 16
5 ... 15	Value, input channel 5 ... 15	Not used
16 = MSW	Value, input channel 16	Not used

Analog Channel Parameters

Overview

Parameters must be set for all of the analog channels before the module can be commissioned. This section provides the codes for setting the parameters and gives examples of parameter settings.

NOTE: If you set new parameters for the module, always send a complete set of parameters (all channels, inputs and outputs), even if you only want to change a single parameter. Otherwise the module will refuse the new parameters and continue working with the old ones.

Key

This section focuses on output words 1 ... 4, as highlighted in the table below:

Word	Input Data	Output Data
1 = LSW	Value, input channel 1	**Parameters for input channels 1 ... 4**
2	Value, input channel 2	**Parameters for input channels 5 ... 8**
3	Value, input channel 3	**Parameters for input channels 9 ... 12**
4	Value, input channel 4	**Parameters for input channels 13 ... 16**
5 ... 15	Value, input channel 5 ... 15	Not used
16 = MSW	Value, input channel 16	Not used

Illustration

Parameters are set by entering a four-bit code in output words 1 ... 4, as follows:

Output Word 1 (Register 4*x*)															
15	14	13	12	11	10	9	8	7	6	5	4	3	2	1	0
for input channel 4				for input channel 3				for input channel 2				for input channel 1			

Output Word 2 (Register 4*x*+1)															
15	14	13	12	11	10	9	8	7	6	5	4	3	2	1	0
for input channel 8				for input channel 7				for input channel 6				for input channel 5			

Output Word 3 (Register 4*x*+2)															
15	14	13	12	11	10	9	8	7	6	5	4	3	2	1	0
for input channel 12				for input channel 11				for input channel 10				for input channel 9			

Output Word 4 (Register 4*x*+3)															
15	14	13	12	11	10	9	8	7	6	5	4	3	2	1	0
for input channel 16				for input channel 15				for input channel 14				for input channel 13			

Codes for Analog Input Parameters

Use the following codes to set the parameters for each analog input channel:

Code (binary)	Code (hex)	Parameter
0000	0	Reserved value (see note below)
1010	A	+/-5V input range
1011	B	+/-10V input range
1100	C	Channel inactive
1110	E	4 ... 20 mA

NOTE: The 0000 reserved value is more a control than a parameter. It forces the I/O base into a default condition where it continues to receive field inputs according to the previous channel parameters.

Analog Inputs

Overview

This section describes how to interpret the value of the analog input channels.

Key

This section describes input words 1 ... 16, as highlighted in the table below:

Word	Input Data	Output Data
1 = LSW	**Value, input channel 1**	Parameters for input channels 1 ... 4
2	**Value, input channel 2**	Parameters for input channels 5 ... 8
3	**Value, input channel 3**	Parameters for input channels 9 ... 12
4	**Value, input channel 4**	Parameters for input channels 13 ... 16
5 ... 15	**Value, input channel 5 ... 15**	Not used
16	**Value, input channel 16**	Not used

Bit Assignments

The following table tells how bits are assigned:

Analog-to-digital conversion	Carried out on 12 bits + sign
Bit 15	Sign bit
Bits 14 ... 3	Input channel values
Bits 2 ... 0	Unused. Because these bits are always 0, the value of the word changes in increments of 8

Analog Input Values

Mapping of analog input values is shown below.

Input Word 1 (Register 3*x*, analog value returned on channel 1)															
15	14	13	12	11	10	9	8	7	6	5	4	3	2	1	0

Input Word 2 (Register 3*x*+1, analog value returned on channel 2)															
15	14	13	12	11	10	9	8	7	6	5	4	3	2	1	0

Input Word 3 (Register 3*x*+2, analog value returned on channel 3)															
15	14	13	12	11	10	9	8	7	6	5	4	3	2	1	0

Input Word 8 (Register 3*x*+15, analog value returned on channel 16)															
15	14	13	12	11	10	9	8	7	6	5	4	3	2	1	0

Broken Wire Indication

Broken wire detection is possible for the 4 ... 20 mA range. In this case, a current signal that is less than 2 mA on one of the inputs is detected as a broken wire. The input word of that channel returns the value -32,768. A broken wire indication has the following binary format:

Broken wire indication in an input word															
1	0	0	0	0	0	0	0	0	0	0	0	0	0	0	0

Input Measuring Ranges

Overview

This section contains illustrations explaining the analog/digital relation for the three input measuring ranges.

+/- 10 V

The following illustration shows the analog/digital relation at +/- 10 V:

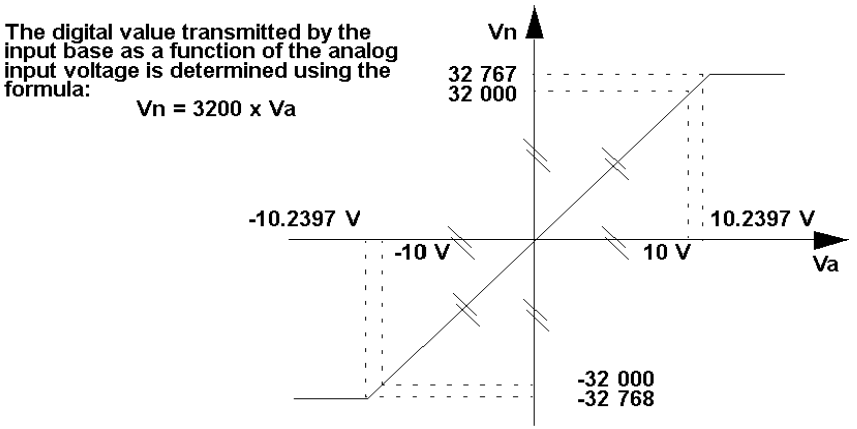

+/- 5 V

The following illustration shows the analog/digital relation at +/- 5 V:

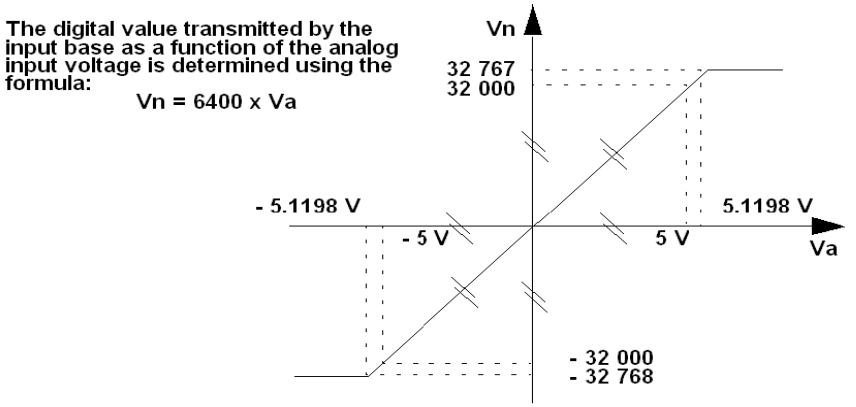

4 ... 20 mA

The following illustration shows the analog/digital relation for the input measuring at 4 ... 20 mA current:

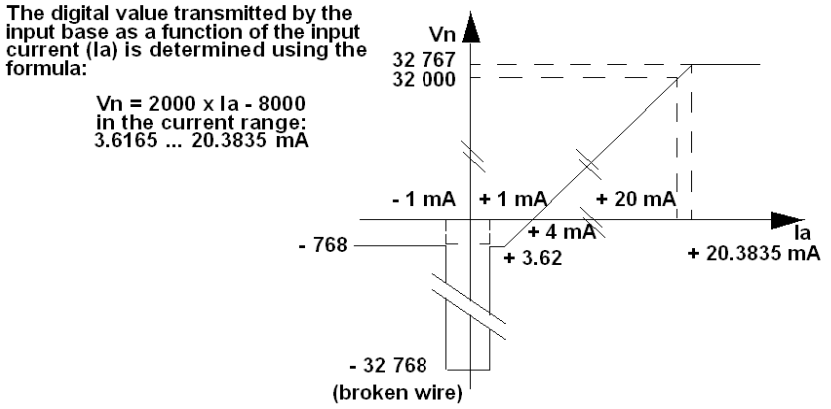

170 AAI 520 40 Analog 4 Channel RTD, Therm. and mV Input Module Base

8

Overview

This chapter describes the 170 AAI 520 40 TSX Momentum I/O base.

What's in this Chapter?

This chapter contains the following topics:

Topic	Page
Front Panel Components	114
Specifications	116
Internal Pin Connections	124
Field Wiring Guidelines	125
Wiring Diagrams	127
I/O Mapping	128
Analog Channel Parameters	129
Analog Inputs	134
RTD, Thermocouple and mV Input Measuring Ranges	136

Front Panel Components

Overview

This section contains an illustration of the front panel of the 170 AAI 520 40 I/O base and a description of the LEDs.

Front Panel Illustration

The front panel of the I/O base is shown in the illustration below.

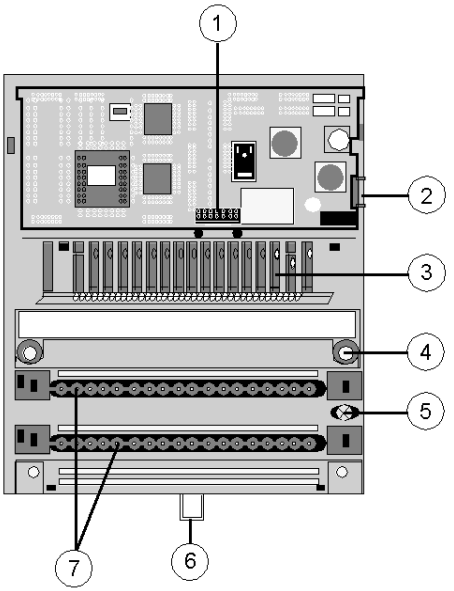

Label	Description
1	Internal interface (ATI) connector
2	Locking and ground contact for the adapter
3	LED status display
4	Mounting holes for panel mount
5	Grounding screw
6	Locking tab for DIN rail mount
7	Sockets for the terminal connectors

LED Illustration

This I/O base has one LED, the ready indicator shown in the illustration below.

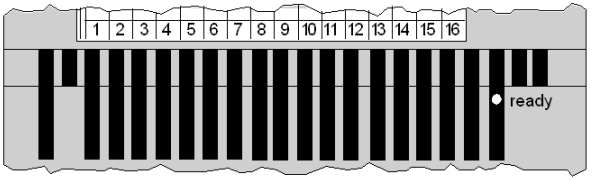

LED Descriptions

The ready indicator is described in the table below.

Indicator	Condition	Message
Ready	Green	Module is ready to communicate. Operating voltage for internal logic is present and self-test has been passed.
	Off	Module is not ready. Operating voltage is not present or module is defective.

Specifications

Overview

This section contains specifications for the 170 AAI 520 40 I/O base.

General Specifications

Module type	4 analog inputs
Range - mV	+/- 100 mV, +/- 25 mV
Types - RTD	Pt100, Pt 1000, Ni100 or Ni1000
Types - Thermocouple	B, E, J, K, N, R, S or T
Supply voltage	24 VDC
Supply voltage range	20 ... 30 VDC
Supply current consumption	max. 330 mA at 24 VDC
Power dissipation	3.5 W typical 5.5 W maximum
I/O map	4 input words 4 output words

Isolation

Between channels	400 VDC
Between base supply and ground	500 Vcc, 1 min
Between input channels and ground	500 VAC, 1 min
Common mode channel/ground voltage	+/-100 VDC, 250 VAC
Common mode voltage between channels	200 VDC, 115 VAC single- or three-phase or 250 VAC single phase
Common mode rejection between channel and ground	135 dB DC, 145 dB AC 50 Hz, 155 dB AC 60 Hz
Common mode rejection between channels	120 dB DC, 130 dB AC 50 Hz, 140 dB AC 60 Hz
Serial-mode rejection	35 dB AC 50 Hz, 45 dB AC 60 Hz
Input protection	+/- 30 VDC

Fuses

Internal (not user-replaceable)	2 A slow-blow
External (recommended)	1 A slow-blow (Bussmann GDC-1A or equivalent)

EMC

Immunity	IEC 1131-2 Surge on auxiliary power supply 500 V
Emissions	EN 50081-2
Agency approvals	UL, CSA, CE, FM Class 1 Div. 2

Physical Dimensions

Width	125 mm (4.9 in)
Depth (with no adapter)	40 mm (1.54 in)
Length	141.5 mm (5.5 in) no busbar
Weight	215 g (0.45 lb)

Analog Inputs mV Range

Surge tolerance: input voltage	+/- 30 VDC	
Number of channels	4 differential inputs	
Format of transmitted data	full 16 bits signed (2's complement)	
Current source	0.125 mA (for Pt1000 or Ni 1000 probe)	1.25 mA (for Pt 100 or Ni 100 probe)
Update time for the inputs	500 ms	
Voltage range	+/-25 mV	+/-100 mV
Input impedance	> 10 MOhm	> 10 MOhm
Error at 25 degrees C	+/- 21 microV	+/- 27 microV
Error at 60 degrees C	+/- 46 microV	+/- 94 microV
Resolution	15 bits + sign	15 bits + sign

RTD Ranges for Pt100/Pt1000

Range	Pt100 (IEC751)	Pt100 (US/JIS)	Pt1000 (IEC751)	Pt1000 (US/JIS)
Input Span	-200...+850 deg. C -328...+1562 deg. F	-200...+510 deg. C -328...+950 deg. F	-200...+850 deg. C -328...+1562 deg. F	-200...+510 deg. C -328...+950 deg. F
Resolution of conversion	0.029...0.043 deg. C 0.052...0.077 deg. F	0.029...0.037 deg. C 0.053...0.067 deg. F	0.029...0.043 deg. C 0.052...0.077 deg. F	0.029...0.037 deg. C 0.053...0.067 deg. F
Display resolution	0.1 deg. C 0.1 deg. F	0.1 deg. C 0.1 deg. F	0.1 deg. C 0.1 deg. F	0.1 deg. C 0.1 deg. F

Errors for Pt100/Pt1000

Maximum error at 25 degrees C in degrees C (1)

Temperature	Wiring Type							
	Pt100 (IEC751)		Pt100 (US/JIS)		Pt1000 (IEC751)		Pt1000 (US/JIS)	
	2/4 wires	3 wires	2/4 wires	3 wires	2/4 wires	3 wires	2/4 wires	3 wires
-200 deg. C	0.2 [0.7]	0.4 [0.8]	0.2 [0.7]	0.4 [0.8]	0.2 [0.6]	0.4 [0.8]	0.2 [0.6]	0.4 [0.8]
-100 deg. C	0.2 [0.9]	0.4 [1.0]	0.2 [0.9]	0.4 [1.0]	0.3 [0.8]	0.4 [1.0]	0.3 [0.8]	0.4 [1.0]
0 deg. C	0.3 [1.1]	0.4 [1.2]	0.3 [1.1]	0.4 [1.2]	0.3 [1.0]	0.4 [1.2]	0.3 [1.0]	0.4 [1.2]
100 deg. C	0.3 [1.2]	0.4 [1.4]	0.3 [1.3]	0.4 [1.4]	0.3 [1.2]	0.4 [1.4]	0.3 [1.2]	0.4 [1.4]
200 deg. C	0.3 [1.4]	0.4 [1.5]	0.3 [1.4]	0.4 [1.5]	0.3 [1.4]	0.5 [1.5]	0.3 [1.4]	0.5 [1.6]
300 deg. C	0.3 [1.6]	0.5 [1.8]	0.3 [1.7]	0.5 [1.8]	0.3 [1.6]	0.5 [1.8]	0.4 [1.6]	0.5 [1.8]
400 deg. C	0.3 [1.8]	0.5 [2.0]	0.3 [1.8]	0.5 [2.0]	0.4 [1.8]	0.5 [2.0]	0.4 [1.8]	0.5 [2.0]
500 deg. C	0.3 [2.1]	0.5 [2.2]	0.3 [2.1]	0.5 [2.2]	0.4 [2.0]	0.5 [2.2]	0.4 [2.0]	0.5 [2.2]
600 deg. C	0.4 [2.3]	0.5 [2.5]			0.4 [2.3]	0.5 [2.4]		
700 deg. C	0.4 [2.5]	0.5 [2.7]			0.4 [2.5]	0.6 [2.7]		
800 deg. C	0.4 [2.7]	0.6 [2.9]			0.5 [2.8]	0.6 [2.9]		
-300 deg. F	0.4 [1.3]	0.5 [1.5]	0.4 [1.3]	0.5 [1.5]	0.4 [1.2]	0.6 [1.4]	0.4 [1.1]	0.6 [1.4]
-100 deg. F	0.4 [1.6]	0.6 [1.9]	0.4 [1.6]	0.6 [1.9]	0.5 [1.5]	0.6 [1.8]	0.5 [1.5]	0.6 [1.8]
100 deg. F	0.5 [2.0]	0.6 [2.3]	0.5 [2.0]	0.6 [2.2]	0.5 [1.9]	0.7 [2.2]	0.5 [1.9]	0.7 [2.2]
300 deg. F	0.5 [2.4]	0.6 [2.6]	0.5 [2.3]	0.6 [2.6]	0.5 [2.3]	0.7 [2.6]	0.5 [2.2]	0.7 [2.5]
500 deg. F	0.5 [2.8]	0.7 [3.0]	0.5 [2.7]	0.7 [3.0]	0.5 [2.7]	0.8 [3.0]	0.5 [2.7]	0.7 [3.0]
700 deg. F	0.6 [3.1]	0.7 [3.4]	0.5 [3.1]	0.7 [3.4]	0.6 [3.1]	0.8 [3.4]	0.6 [3.1]	0.8 [3.4]

Temperature	Wiring Type							
	Pt100 (IEC751)		Pt100 (US/JIS)		Pt1000 (IEC751)		Pt1000 (US/JIS)	
	2/4 wires	3 wires	2/4 wires	3 wires	2/4 wires	3 wires	2/4 wires	3 wires
900 deg. F	0.6 [3.6]	0.8 [3.9]	0.6 [3.5]	0.8 [3.8]	0.6 [3.5]	0.8 [3.9]	0.6 [3.5]	0.8 [3.8]
1100 deg. F	0.6 [4.0]	0.9 [4.3]			0.7 [4.0]	0.9 [4.4]		
1300 deg. F	0.7 [4.6]	0.9 [4.8]			0.7 [4.5]	1.0 [4.8]		
1500 deg. F	0.7 [5.0]	0.9 [5.3]			0.8 [5.0]	1.1 [5.3]		

(1) The values shown in brackets correspond to the maximum errors for temperatures in the range 0 ... 60 degrees C or 32 and 140 degrees F.

Maximum Cable Resistance for Pt100/Pt1000

Wiring type	Pt100 (IEC751)		Pt100 (US/JIS)		Pt1000 (IEC751)		Pt1000 (US/JIS)	
	2/4 wires	3 wires	2/4 wires	3 wires	2/4 wires	3 wires	2/4 wires	3 wires
Max. resistance per cable	50 Ohms with 4 wires	20 Ohms (1)	500 Ohms with 4 wires	20 Ohms (1)	500 Ohms with 4 wires	200 Ohms (1)	500 Ohms with 4 wires	200 Ohms (1)

(1) Matching of line resistance for 3-conductor cables is < 0.02%.

RTD Ranges for Ni100/Ni1000

Range	Ni100 DIN43760	Ni1000 DIN43760
Input Span	-60...+250 deg. C -76...+482 deg. F	-60...+250 deg. C -76...+482 deg. F
Resolution of conversion	0.026...0.012 deg. C 0.047...0.022 deg. F	0.026...0.0120 deg. C 0.047...0.022 deg. F
Display resolution	0.1 deg. C 0.1 deg. F	0.1 deg. C 0.1 deg. F

Errors for Ni100/Ni1000

Maximum error at 25 degrees C in degrees C (1)

Temperature	Wiring Type			
	Ni100 DIN43760		Ni1000 DIN43760	
-50 deg. C	0.3 [0.8]	0.3 [1.0]	0.3 [0.8]	0.4 [0.9]
0 deg. C	0.2 [0.8]	0.3 [1.0]	0.3 [0.8]	0.3 [0.9]
50 deg. C	0.2 [0.8]	0.3 [0.9]	0.3 [0.8]	0.3 [0.9]
100 deg. C	0.2 [0.8]	0.3 [0.9]	0.3 [0.8]	0.3 [0.9]

Temperature	Wiring Type			
	Ni100 DIN43760		Ni1000 DIN43760	
150 deg. C	0.2 [0.8]	0.3 [0.9]	0.2 [0.8]	0.3 [0.9]
200 deg. C	0.2 [0.8]	0.3 [0.9]	0.2 [0.8]	0.3 [0.8]
250 deg. C	0.2 [0.8]	0.3 [0.8]	0.2 [0.8]	0.3 [0.8]
0 deg. F	0.4 [1.4]	0.5 [1.6]	0.4 [1.3]	0.6 [1.6]
100 deg. F	0.4 [1.4]	0.5 [1.6]	0.4 [1.4]	0.5 [1.5]
200 deg. F	0.4 [1.4]	0.5 [1.5]	0.4 [1.4]	0.5 [1.5]
300 deg. F	0.4 [1.4]	0.5 [1.5]	0.4 [1.4]	0.5 [1.5]
400 deg. F	0.4 [1.4]	0.5 [1.5]	0.4 [1.4]	0.5 [1.5]

(1) The values shown in brackets correspond to the maximum errors for temperatures in the range 0 ... 60 degrees C or 32 and 140 degrees F.

Maximum Cable Resistance for Ni100/Ni1000

Wiring Type	Ni100 DIN43760		Ni1000 DIN43760	
	2/4 wires	3 wires	2/4 wires	3 wires
Max. resistance per cable	1000 Ohms with 4 wires	200 Ohms (1)	1000 Ohms with 4 wires	200 Ohms (1)

(1) Matching of line resistance for 3-conductor cables is < 0.02%.

Thermocouple Ranges in Degrees C

Input span and resolution in degrees C

	Thermocouple Type							
	B	E	J	K	N	R	S	T
Input Span	0.0 +1802.0	-270.0 +1000.0	-210.0 +1200.0	-270.0 +1372.0	-270.0 +1300.0	-50.0 +1769.0	-50.0 +1769.0	-270.0 +400.0
Resolution of conversion	0.78... ...0.07	1.12... ...0.04	0.15... ...0.05	0.83... ...0.30	1.67... ...0.03	0.26... ...0.08	0.24... ...0.09	0.50... ...0.02
Display resolution	0.1	0.1	0.1	0.1	0.1	0.1	0.1	0.1

Thermocouple Errors in Degrees C

Maximum error at 25 degrees C in degrees C (1)

Temperature	Thermocouple Type							
	B	E	J	K	N	R	S	T
-200 deg. C		5.8 [11.8]		6.9[14.6]	8.0[18.3]			6.8[14.8]
-100 deg. C		3.4 [6.7]		3.6 [7.5]	4.0 [8.9]			4.0 [8.4]
0 deg. C		2.7 [5.3]	2.8 [5.5]	2.9 [6.0]	3.3 [7.3]	6.4[13.1]	6.3[12.8]	3.0 [6.3]
100 deg. C		2.5 [4.8]	2.7 [5.2]	2.9 [5.8]	3.1 [6.6]	4.7 [9.5]	4.8 [9.6]	2.6 [5.4]
200 deg. C		2.4 [4.5]	2.7 [5.3]	3.2 [6.2]	2.8 [6.1]	4.2 [8.2]	4.4 [8.5]	2.4 [4.9]
300 deg. C		2.4 [4.5]	2.9 [5.5]	3.1 [6.1]	2.7 [5.8]	3.9 [7.7]	4.1 [8.1]	2.3 [4.7]
400 deg. C		2.4 [4.5]	3.0 [5.7]	3.2 [6.2]	2.8 [5.7]	3.8 [7.4]	4.0 [7.9]	
500 deg. C		2.4 [4.6]	3.1 [5.7]	3.3 [6.3]	2.8 [5.7]	3.7 [7.2]	4.1 [7.8]	
600 deg. C	5.1 [9.5]	2.7 [4.8]	3.1 [5.7]	3.4 [6.5]	2.8 [5.8]	3.7 [7.0]	4.1 [7.7]	
700 deg. C	4.5 [8.4]	2.8 [5.0]	3.0 [5.5]	3.6 [6.7]	3.0 [5.9]	3.7 [6.9]	4.1 [7.7]	
800 deg. C	4.2 [7.7]	3.0 [5.3]		3.8 [7.0]	3.0 [6.1]	3.7 [6.9]	4.1 [7.6]	
900 deg. C	4.0 [7.2]			4.0 [7.5]	3.2 [6.3]	3.7 [6.7]	4.1 [7.5]	
1000 deg. C	3.8 [6.8]			4.2 [7.8]	3.3 [6.5]	3.7 [6.7]	4.1 [7.5]	
1100 deg. C	3.6 [6.5]			4.5 [8.2]	3.6 [6.8]	3.7 [6.7]	4.2 [7.5]	
1200 deg. C	3.6 [6.3]			4.7 [8.7]	3.7 [7.1]	3.7 [6.7]	4.2 [7.5]	
1300 deg. C	3.6 [6.2]					3.9 [6.8]	4.3 [7.7]	
1400 deg. C	3.6 [6.2]					4.0 [6.9]	4.4 [7.8]	
1500 deg. C	3.6 [6.1]					4.1 [7.1]	4.6 [8.1]	
1600 deg. C	3.8 [6.3]					4.3 [7.4]	4.8 [8.3]	
1700 deg. C	3.8 [6.5]							
Overflow code	+ 1802.1	+ 1000.1	+ 1200.1	+ 1372.1	+ 1300.1	+ 1769.1	+ 1769.1	+ 400.1
Underflow code	- 0.1	- 270.1	- 210.1	- 270.1	- 270.1	- 50.1	- 50.1	- 270.1
Wiring default code	- 0.2	- 270.2	- 210.2	- 270.2	- 270.2	- 50.2	- 50.2	- 270.2

(1) The values shown in brackets correspond to the maximum errors for temperatures in the range 0...60 degrees C or 32 and 140 degrees F.

Thermocouple Ranges in Degrees F

Input span and resolution in degrees F

	Thermocouple Type							
	B	**E**	**J**	**K**	**N**	**R**	**S**	**T**
Input span	-32.0 +3275.6	-454.1 +1832.0	-346.1 +2192.0	-454.1 +2501.6	-454.1 +2372.0	-58.1 +3216.2	-58.1 +3216.2	-454.1 +752.0
Resolution of conversion	1.40... ...0.12	2.01... ...0.07	0.27... ...0.09	1.50... ...0.05	3.00... ...0.05	0.47... ...0.15	0.43... ...0.16	0.90... ...0.04
Display resolution	0.1	0.1	0.1	0.1	0.1	0.1	0.1	0.1

Thermocouple Errors in Degrees F

Maximum error at 77 degrees F in degrees F (1)

Temperature	Thermocouple Type							
	B	**E**	**J**	**K**	**N**	**R**	**S**	**T**
-300 deg. F		9.1 [18.5]		10.8 [22.3]	11.9 [27.5]			10.9 [23.5]
-200 deg. F								7.8[17.1]
-100 deg. F		5.7[11.1]		6.1[12.4]	6.6[14.6]			6.5[13.8]
0 deg. F			5.1[10.0]			12.7 [26.0]	12.3 [25.2]	5.6 [11.9]
100 deg. F		4.7[9.2]		5.1[10.5]	5.8[12.8]			5.0[10.7]
200 deg. F			4.9[9.4]			8.6[17.4]	8.7[17.5]	4.7[9.8]
300 deg. F		4.4[8.3]		5.5[10.9]	5.2[11.5]			4.4[9.2]
400 deg. F			4.9[9.5]			7.5[14.8]	7.8[15.3]	4.3[8.8]
500 deg. F		4.3[8.1]		5.7[11.2]	5.1[10.8]			4.3[8.5]
600 deg. F			5.3[9.9]			6.9[13.6]	7.4[14.4]	4.2[8.3]
700 deg. F		4.4[8.1]		5.7[11.2]	4.9[10.5]			4.1[8.2]
800 deg. F			5.5[10.3]			6.8[13.1]	7.3[14.2]	
900 deg. F		4.6[8.3]		5.9[11.3]	5.1[10.4]			
1000 deg. F			5.5[10.3]			6.7[12.8]	7.4[14.0]	
1100 deg. F	9.2[17.1]	4.8[8.7]		6.1[11.7]	5.1[10.4]			
1200 deg. F			5.5[10.0]			6.7[12.6]	7.3[13.8]	
1300 deg. F	8.1[15.1]	5.0[9.1]		6.5[12.1]	5.3[10.6]			
1400 deg. F			5.3[9.8]			6.6[12.4]	7.3[13.7]	
1500 deg. F	7.4[13.7]	5.4[9.6]		6.9[12.9]	5.6[11.1]			
1600 deg. F						6.6[12.3]	7.3[13.7]	
1700 deg. F	7.1[12.8]			7.3[13.5]	5.8[11.5]			

Temperature	Thermocouple Type							
	B	**E**	**J**	**K**	**N**	**R**	**S**	**T**
1800 deg. F						6.7[12.1]	7.3[13.6]	
1900 deg. F	6.7[12.0]			7.8[14.2]	6.2[11.9]			
2000 deg. F						6.7[12.0]	7.4[13.6]	
2100 deg. F	6.5[11.5]			8.2[15.1]	6.6[12.4]			
2200 deg. F						6.8[11.9]	7.6[13.6]	
2300 deg. F	6.4[11.3]			8.9[16.2]	7.0[13.1]			
2400 deg. F						6.8[12.0]	7.8[13.8]	
2500 deg. F	6.4[11.1]							
2600 deg. F						6.9[11.9]	8.0[14.2]	
2700 deg. F	6.5[11.1]							
2800 deg. F						6.9[11.9]	8.3[14.7]	
2900 deg. F	6.6[11.3]							
3000 deg. F						7.0[12.0]	8.8[15.4]	
3100 deg. F	6.6[11.7]							
Overflow code	+3275.7	+1832.1	+2192.1	+2501.7	+2372.1	+3216.3	+3216.3	+752.1
Underflow code	+31.9	-454.2	-346.2	-454.2	-454.2	-58.2	-58.2	-454.2
Wiring default code	+31.8	-454.3	-346.3	-454.3	-454.3	-58.3	-58.3	-454.3

(1) The values shown in brackets correspond to the maximum errors for temperatures in the range 0...60 degrees C or 32 and 140 degrees F.

Internal Pin Connections

Overview

This section contains an illustration showing the internal connections between terminals on the I/O base.

Illustration

The following illustration shows the internal connections between terminals.

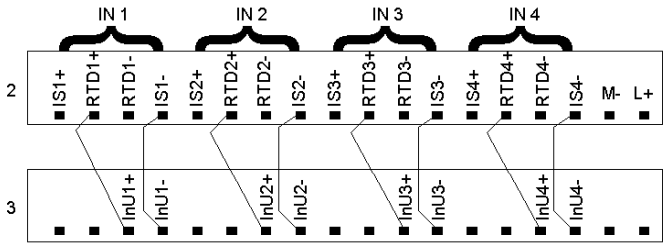

Field Wiring Guidelines

Overview

This section contains wiring guidelines and precautions.

Terminal Connector

To connect field devices to the I/O base, you need a field wiring terminal connector. Schneider Electric sells terminal connectors in sets of three.

Type	Part Number
Screw-in	170 XTS 001 00
Spring-clip	170 XTS 002 00

Mapping Terminal Blocks

Mapping terminal blocks is described in the table below.

Row	Terminal No.	Description	Function
2	1, 5, 9, 13	IS1+,IS2+ IS3+,IS4+	+Current source output, Channels 1 ... 4
	2, 6, 10, 14	RTD1+, RTD2+ RTD4+, RTD4+	+RTD input, Channels 1 ... 4
	3, 7, 11, 15	RTD1-, RTD2- RTD4-, RTD4-	-RTD input, Channels 1 ... 4
	4, 8, 12, 16	IS1-,IS2- IS3-,IS4-	-Current source output, Channels 1 ... 4
	17	M-	- power supply return
	18	L+	Module power supply + 24 V
3	1, 2, 5, 6, 9,10,13, 14	-	Not used
	3, 7, 11, 15	InU1+,InU2+ InU3+,InU4+	+ thermocouple or voltage mode input, channels 1 ... 4
	4, 8, 12, 16	InU1-,InU2- InU-+,InU4-	- thermocouple or voltage mode input, Channels 1 ... 4
	17, 18	-	Not used

Signal Protection

To protect the signal from external noise induced in serial or common mode, we recommend the following precautions.

- Use shielded twisted-pair cables with a minimum conductor cross section of 24 AWG or 0.22 mm^2.
- Connect the cable shield to ground via the cable grounding rail (part number CER 01).
- You may combine the analog inputs on this I/O base in one multi-pair cable provided the same ground is used.
- When wiring the voltage supply, use sensors that do not have ground reference.

ThermocoupleMeasurement Precautions

For thermocouple measurements (except with thermocouple B), observe the following precautions to obtain the accuracies indicated in the performance tables.

- Wait 45 min. after powering up the base (the time required for the module to warm up to the temperature balance needed for internal cold junction compensation) prior to taking any measurements.
- The air circulation must not exceed a rate of 0.1 m/s; air circulation in excess of this amount will affect the thermal balance inside the base.
- Keep the rate of temperature fluctuations outside the base to less than 10 deg./hr.
- Keep the distance between the base and any heat source greater than 100 mm.

Wiring Diagrams

Overview

This section contains an illustration to assist you in wiring the following types of devices:

- RTD 4-wire configuration
- RTD 3-wire configuration
- RTD 2-wire configuration
- Thermocouple input

Diagram

Examples of wiring are shown in the diagram below:

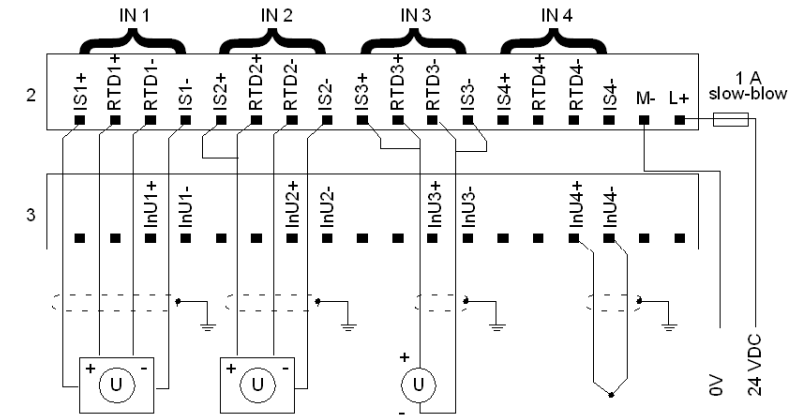

Examples
* Channel 1,RTD input, 4 - wire configuration
* Channel 2,RTD input, 3 - wire configuration
* Channel 3,RTD input, 2 - wire configuration
* Channel 4,thermocouple input

I/O Mapping

Overview

The 170 AAI 520 40 TSX Momentum I/O base supports 4 analog inputs. This section contains information about the mapping of the analog input values into input words and the usage of output words for channel configuration.

I/O Map

The I/O base must be mapped as four contiguous input words and four contiguous output words, as follows:

Word	Input Data	Output Data
1 = LSW	Value, input channel 1	Parameters for input channels 1
2	Value, input channel 2	Parameters for input channels 2
3	Value, input channel 3	Parameters for input channels 3
4 = MSW	Value, input channel 4	Parameters for input channels 4

Analog Channel Parameters

Overview

Parameters must be set for all of the analog channels before the module can be commissioned. This section provides the codes for setting the parameters and gives examples of parameter settings.

NOTE: If you set new parameters for the module, always send a complete set of parameters (all channels, inputs and outputs), even if you only want to change a single parameter. Otherwise, the module will refuse the new parameters and continue working with the old ones.

Key

This section focuses on output words 1 ... 4, as highlighted in the table below:

Word	Input Data	Output Data
1 = LSW	Value, input channel 1	**Parameters for input channels 1**
2	Value, input channel 2	**Parameters for input channels 2**
3	Value, input channel 3	**Parameters for input channels 3**
4 = MSW	Value, input channel 4	**Parameters for input channels 4**

Illustration

Parameters are set by entering a four-bit code in output words 1 ... 4, as follows:

Output Word 1 (Register 4*x*, to parameterize input channel 1)															
15	14	13	12	11	10	9	8	7	6	5	4	3	2	1	0

Output Word 2 (Register 4*x*+1, to parameterize input channel 2)															
15	14	13	12	11	10	9	8	7	6	5	4	3	2	1	0

Output Word 3 (Register 4*x*+2, to parameterize input channel 3)															
15	14	13	12	11	10	9	8	7	6	5	4	3	2	1	0

Output Word 4 (Register 4*x*+3, to parameterize input channel 4)															
15	14	13	12	11	10	9	8	7	6	5	4	3	2	1	0

Parameters

For each input channel, you may set the following parameters:

Parameter	Options
Input range	Type B,E,J,K,N,R,S or T thermocouple (according to IEC584 standard, June1989) with internal cold junction compensation
RTD	Pt100 or Pt1000 RTDs (according to IEC751, June 1986; or JIS C1604, January 1989), and Ni100 or Ni1000 RTDs (according to DIN standard 43.760, September 1987), with 2-, 3- or 4 wires
Low voltage range	+/-100 mV or +/-25 mV
Broken wire detection	Enabled or disabled

NOTE: The 0000 reserved value is more a control than a parameter. It forces the I/O base into a default condition where it continues to receive field inputs according to the previous channel parameters.

Thermocouple Parameter Codes

Use the following codes to set your choice of parameters:

Input range	Temperature unit	Broken-wire detection	Parameter code (hex)
Thermocouple B	1/10 degrees C	disabled	2201
		enabled	2301
	1/10 degrees F	disabled	2281
		enabled	2381
Thermocouple E	1/10 degrees C	disabled	1202
		enabled	1302
	1/10 degrees F	disabled	1282
		enabled	1382
Thermocouple J	1/10 degrees C	disabled	1203
		enabled	1303
	1/10 degrees F	disabled	1283
		enabled	1383
Thermocouple K	1/10 degrees C	disabled	1204
		enabled	1304
	1/10 degrees F	disabled	1284
		enabled	1384

Input range	Temperature unit	Broken-wire detection	Parameter code (hex)
Thermocouple N	1/10 degrees C	disabled	1205
		enabled	1305
	1/10 degrees F	disabled	1285
		enabled	1385
Thermocouple R	1/10 degrees C	disabled	2206
		enabled	2306
	1/10 degrees F	disabled	2286
		enabled	2386
Thermocouple S	1/10 degrees C	disabled	2207
		enabled	2307
	1/10 degrees F	disabled	2287
		enabled	2387
Thermocouple T	1/10 degrees C	disabled	2208
		enabled	2308
	1/10 degrees F	disabled	2288
		enabled	2388

RTD Parameter Codes

Use the following codes to set your choice of parameters:

Input range	Wiring configuration	Temperature unit	Broken-wire detection	Parameter code (hex)
IEC PT100 RTD	2- or 4-wire	1/10 degrees C	disabled	0A20
			enabled	0B20
		1/10 degrees F	disabled	0AA0
			enabled	0BA0
	3-wire	1/10 degrees C	disabled	0E20
			enabled	0F20
		1/10 degrees F	disabled	0EA0
			enabled	0FA0

Input range	Wiring configuration	Temperature unit	Broken-wire detection	Parameter code (hex)
IEC PT1000 RTD	2- or 4-wire	1/10 degrees C	disabled	0221
			enabled	0321
		1/10 degrees F	disabled	02A1
			enabled	03A1
	3-wire	1/10 degrees C	disabled	0621
			enabled	0721
		1/10 degrees F	disabled	06A1
			enabled	07A1
US/JIS PT100 RTD	2- or 4-wire	1/10 degrees C	disabled	0A60
			enabled	0B60
		1/10 degrees F	disabled	0AE0
			enabled	0BE0
	3-wire	1/10 degrees C	disabled	0E60
			enabled	0F60
		1/10 degrees F	disabled	0EE0
			enabled	0FE0
US/JIS PT1000 RTD	2- or 4-wire	1/10 degrees C	disabled	0261
			enabled	0361
		1/10 degrees F	disabled	02E1
			enabled	03E1
	3-wire	1/10 degrees C	disabled	0661
			enabled	0761
		1/10 degrees F	disabled	06E1
			enabled	07E1
DIN Ni100 RTD	2- or 4-wire	1/10 degrees C	disabled	0A23
			enabled	0B23
		1/10 degrees F	disabled	0AA3
			enabled	0BA3
	3-wire	1/10 degrees C	disabled	0E23
			enabled	0F23
		1/10 degrees F	disabled	0EA3
			enabled	0FA3

Input range	Wiring configuration	Temperature unit	Broken-wire detection	Parameter code (hex)
DIN Ni1000 RTD	2- or 4-wire	1/10 degrees C	disabled	0222
			enabled	0322
		1/10 degrees F	disabled	02A2
			enabled	03A2
	3-wire	1/10 degrees C	disabled	0622
			enabled	0722
		1/10 degrees F	disabled	06A2
			enabled	07A2

Low Voltage Parameter Codes

Use the following codes to set your choice of parameters:

Input range	Broken-wire detection	Parameter code (hex)
+/-25mV	disabled	2210
	enabled	2310
+/-100mV	enabled	1211
	disabled	1311

Analog Inputs

Overview

This section describes how to interpret the value of the analog input channels.

Key

This section describes input words 1 ... 8, as highlighted in the table below:

Word	Input Data	Output Data
1 = LSW	**Value, input channel 1**	Parameters for input channels 1
2	**Value, input channel 2**	Parameters for input channels 2
3	**Value, input channel 3**	Parameters for input channels 3
4 = MSW	**Value, input channel 4**	Parameters for input channels 4

Analog Input Values

Mapping of analog input values is shown below.

Input Word 1 (Register 3*x*, analog value returned on channel 1)															
15	14	13	12	11	10	9	8	7	6	5	4	3	2	1	0

Input Word 2 (Register 3*x*+1, analog value returned on channel 2)															
15	14	13	12	11	10	9	8	7	6	5	4	3	2	1	0

Input Word 3 (Register 3*x*+2, analog value returned on channel 3)															
15	14	13	12	11	10	9	8	7	6	5	4	3	2	1	0

Input Word 4 (Register 3*x*+3, analog value returned on channel 4)															
15	14	13	12	11	10	9	8	7	6	5	4	3	2	1	0

Broken Wire Indication

A broken wire indication has the following values:

	+/- 25mv	**+/- 100mv**	**Ni100**	**Ni1000**	**Pt100**	**Pt1000**	**T**	**S**	**R**	**N**	**K**	**J**	**E**	**B**
value	-32768	-32768												
celsius			-602	-602	-2002	-2002	-2702	-502	-502	-2702	-2702	-2102	-2702	-2
Farenheit			-762	-762	-3283	-3283	-4542	-582	-582	-4542	-4542	-3462	-4542	-322

RTD, Thermocouple and mV Input Measuring Ranges

Overview

This section contains illustrations explaining the analog/digital relation for the various input measuring ranges.

RTD or Thermocouple

If a RTD or thermocouple input range is chosen, the digital value transmitted is the temperature value expressed as either a tenth of a degree Centigrade or a tenth of a degree Fahrenheit, depending on the temperature unit chosen in the configuration.

+/- 100 mV

The following illustration shows the analog/digital relation at +/- 100 mV:

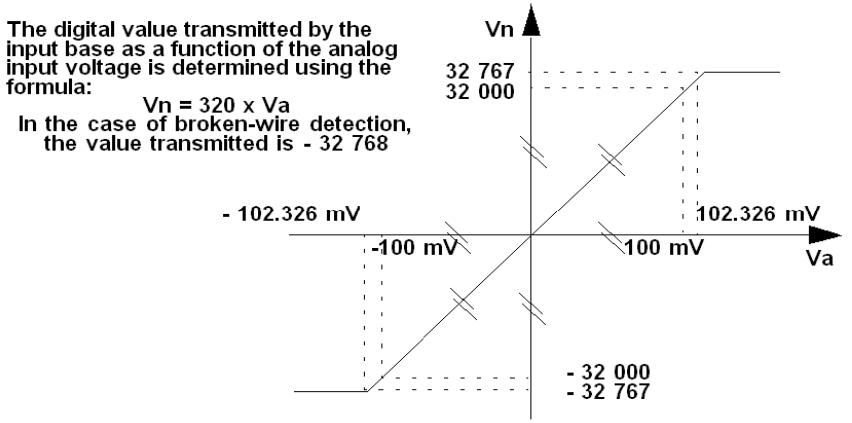

+/- 25 mV

The following illustration shows the analog/digital relation at +/- 25 mV:

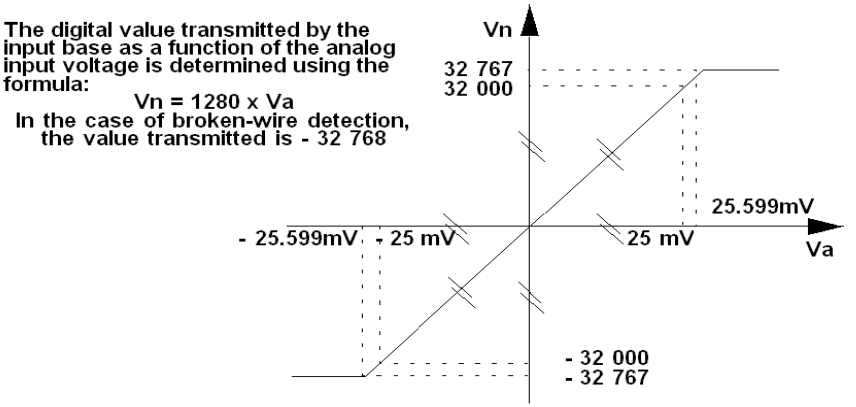

170 AAO 120 00 Analog 4 Channel Output Module Base +/- 10 V, 0 - 20 mA

9

Overview

This chapter describes the 170 AAO 120 00 TSX Momentum I/O base.

What's in this Chapter?

This chapter contains the following topics:

Topic	Page
Front Panel Components	140
Specifications	142
Internal Pin Connections	144
Field Wiring Guidelines	145
Wiring Diagrams	147
I/O Mapping	148
Analog Channel Parameters	149
Analog Outputs	151
Output Ranges	152

Front Panel Components

Overview

This section contains an illustration of the front panel of the 170 AAO 120 00 I/O base and a description of the LEDs.

Front Panel Illustration

The front panel of the I/O base is shown in the illustration below.

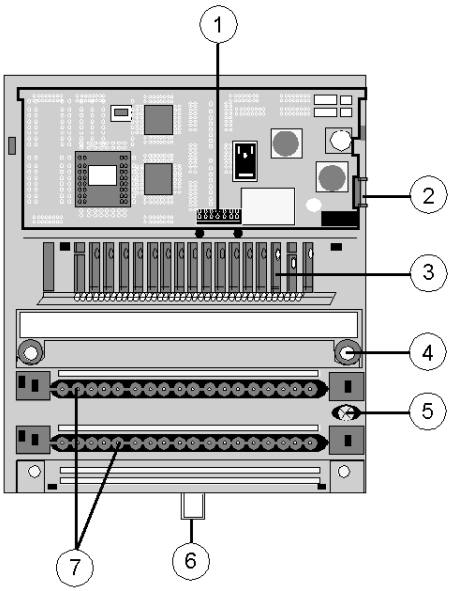

Label	Description
1	Internal interface (ATI) connector
2	Locking and ground contact for the adapter
3	LED status display
4	Mounting holes for panel mount
5	Grounding screw
6	Locking tab for DIN rail mount
7	Sockets for the terminal connectors

LED Illustration

This I/O base has one LED, the ready indicator shown in the illustration below.

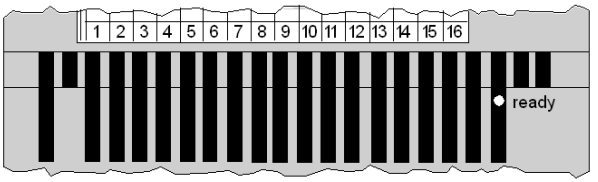

LED Descriptions

The ready indicator is described in the table below.

Indicator	Condition	Message
Ready	Green	Module is ready to communicate. Operating voltage for internal logic is present and self-test has been passed.
	Off	Module is not ready. Operating voltage is not present or module is defective.

Specifications

Overview

This section contains specifications for the 170 AAO 120 00 I/O base.

General Specifications

Module type	4 analog outputs
Output range	+/- 10 V 0 ... 20 mA
Supply voltage	24 VDC
Supply voltage range	20 ... 30 VDC
Supply current consumption (base)	max. 530 mA at 24 VDC
Supply current consumption (actuators)	max. 150 mA at 24 VDC (+/- 5 %
Power dissipation	5.6 W typical 8.5 W maximum
I/O map	5 output words

Isolation

Between channels	none
Between base power supply and ground	500 Vcc, 1 min
Between channels and ground	500 VAC, 1 min
Output protections	short circuits (in voltage) circuits open in current polarity inversion
Base power supply protection	+/- 30 V (voltage or current output)
Common mode rejection	250 VAC @ 47 ... 63 or 250 VDC Channel-to-ground

Fuses

Internal (not user-replaceable)	2 A slow-blow
External (actuator power supply)	1 A slow-blow (Bussmann GDC-1A or equivalent)
External (operating voltage)	1 A slow-blow (Bussmann GDC-1A or equivalent)

EMC

Immunity	IEC 1131-2 Surge on auxiliary power supply 500V
Radiated noise	EN 50081-2
Agency approvals	UL, CSA, CE, FM Class 1 Div.2 pending

Physical Dimensions

Width	125 mm (4.9 in)
Depth (with no adapter)	40 mm (1.54 in)
Length	141.5 mm (5.5 in) with no or one busbar
Weight	240 g (0.55 lb)

NOTE: The 24 VDC actuator power supply is protected in the same way as the analog outputs (different from the base power supply).

Analog Outputs

Number of channels	4	
Format of transmitted data	full 16 bits signed (2's complement)	
Protection (base and actuators)	polarity inversion	
Range	+/-10 V	0 ... 20 mA (current source or sink)
Load impedance	1 KOhm minimum	600 Ohms maximum
Capacitative load	< 1 micro F	< 1 micro F
Error at 25 deg. C	0.2% PE*	0.3% PE*
Error at 60 deg. C	0.25% PE*	0.4% PE*
Temperature drift (60 deg. C)	10ppmPE*/ deg. C	30ppmPE*/ deg. C
Resolution	12 bits + sign	12 bits + sign
Update time for the 4 outputs	< 2 ms	

NOTE: *Not to be confused with Protective Earth. PE is used here as a European notation for full scale, with the following values:

- 10 V in range of +/- 10 V
- 20mA in range of 0 ... 20 mA

Internal Pin Connections

Overview

This section contains an illustration showing the internal connections between terminals on the I/O base.

Illustration

The following illustration shows the internal connections between terminals.

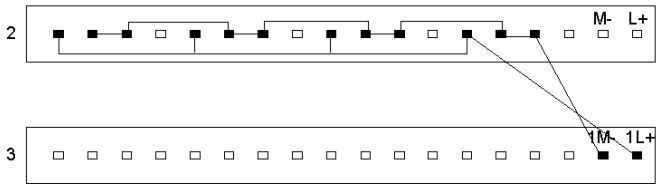

Field Wiring Guidelines

Overview

This section contains wiring guidelines and precautions.

Terminal Connector

To connect field devices to the I/O base, you need a field wiring terminal connector. Schneider Electric sells terminal connectors in sets of three.

Type	Part Number
Screw-in	170 XTS 001 00
Spring-clip	170 XTS 002 00

Mapping Terminal Blocks

⚠ CAUTION

POTENTIAL FOR SHORT CIRCUITS AND/OR POWER-UP SPIKES

Provide external fuses on the operating voltage to protect the module. Appropriate fuse values are shown in the wiring illustration. An unprotected module may be subject to short circuits and/or power-up spikes.

Failure to follow these instructions can result in injury or equipment damage.

Mapping terminal blocks is described in the table below.

Row	Terminal No.	Description	Function
2	4, 8, 12, 16	-	Not used
	1, 5, 9, 13	1L+	+24 V actuator power supply output
	2, 3, 6, 7, 10, 11, 14, 15	1M-	Actuator power supply neg. 0 V return
	17	M-	Module power supply 0 V
	18	L+	Module power supply +24V

Row	Terminal No.	Description	Function
3	1, 5, 9, 13	OUTI1-, OUTI2- OUTI3-, OUTI4-	Output current mode (sink) Channels 1 ... 4
	2, 6, 10, 14	OUTI1+, OUTI2+ OUTI3+, OUTI4+	Output current mode (source) Channels 1 ... 4
	3, 7, 11, 15	OUTU1+, OUTU2+ OUTU3+, OUTU4+	Output voltage mode Channels 1 ... 4
	4, 8, 12, 16	-	Not used
	17	1M-	Actuator power supply neg. 0 V return
	18	1L+	+24 V actuator power supply output

Fuse Required

The 1 A slow-blow fuse shown in the wiring diagram *(see page 147)* must be wired into the actuator power supply.

Signal Protection

To protect the signal from external noise induced in serial or common mode, we recommend the following precautions.

- Use shielded twisted-pair cables with a minimum conductor cross section of 24 AWG or 0.22mm^2.
- Connect the cable shield to ground via the cable grounding rail (part number CER 001).
- You may combine the analog inputs on this I/O base in one multi-pair cable provided they have the same reference relative to ground.
- The actuator power supply must be protected in the same way as the signal itself.

Wiring Diagrams

Overview

This section contains a diagram to assist you in wiring the following types of devices:

- output voltage
- output current (source mode)
- output current (sink) voltage

Diagram

Examples of wiring are shown in the diagram below:

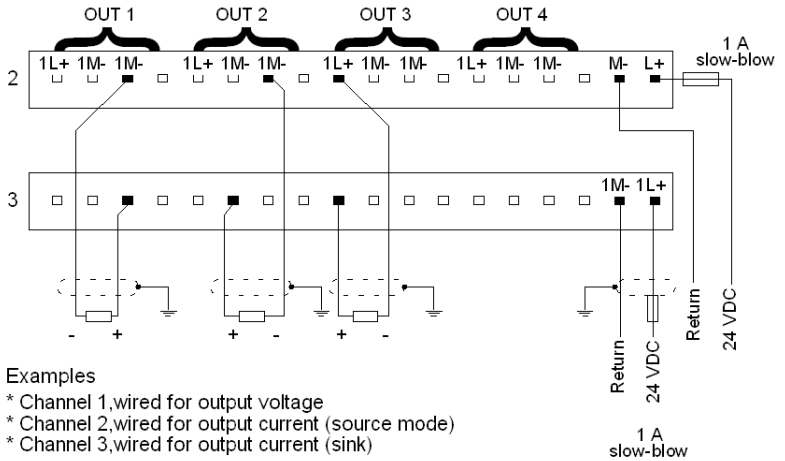

I/O Mapping

Overview

The 170 AAO 120 00 TSX Momentum I/O base supports 4 analog outputs. This section contains information about the mapping of the output words into the analog output values and the usage of output words for channel configuration.

I/O Map

The I/O base must be mapped as five contiguous output words, as follows:

Word	Output Data
1 = LSW	Parameters for output channels 1 ... 4
2	Value, output channel 1
3	Value, output channel 2
4	Value, output channel 3
5 = MSW	Value, output channel 4

Analog Channel Parameters

Overview

Parameters must be set for all of the analog channels before the module can be commissioned. This section provides the codes for setting the parameters and gives examples of parameter settings.

NOTE: If you set new parameters for the module, always send a complete set of parameters (all channels, inputs and outputs), even if you only want to change a single parameter. Otherwise the module will refuse the new parameters and continue working with the old ones.

Key

This section focuses on output word 1, as highlighted in the table below:

Word	Output Data
1 = LSW	**Parameters for output channels 1 ... 4**
2	Value, output channel 1
3	Value, output channel 2
4	Value, output channel 3
5 = MSW	Value, output channel 4

Illustration

Parameters are set by entering a four-bit code in output word 1, as follows:

Output Word 1 (Register 4*x*, parameter word)															
15	14	13	12	11	10	9	8	7	6	5	4	3	2	1	0
for output channel 4				for output channel 3				for output channel 2				for output channel 1			

Parameter Codes

The value entered in this word defines the behaviour of the I/O module in case of loss of communication. Each 4-bit nibble in output word 1 must be configured with one of the following binary codes to define the channel parameters. Parameters must be set for all four channels before the module can be commissioned.

In each case, the x may be a 0 or a 1:

Code	Output Parameter)	Function
0000	Reserved value	Forces the I/O base into a default condition where it continues to receive field inputs according to the previous received-channel parameters.
00x1	Output to Zero	Sends a value to the base that causes it to apply zero at the field output.
01x1	Full Range	Sends a value to the base that causes it to apply full scale (+10 V or + 20 mA) at the field output.
10x1	Output Last Value	Sends a value to the base that causes it to apply the last received value at the field output.

Analog Outputs

Overview

This section describes how to interpret the value of the analog output channels.

Key

This section describes output words 2 ... 5, as highlighted in the table below:

Word	Output Data
1 = LSW	Parameters for input channels 1 ... 4
2	**Value, output channel 1**
3	**Value, output channel 2**
4	**Value, output channel 3**
5 = MSW	**Value, output channel 4**

Analog Output Values

Mapping of analog output values is shown below.

Output Word 2 (Register 4*x*+1, analog value sent on channel 1)															
15	14	13	12	11	10	9	8	7	6	5	4	3	2	1	0

Output Word 3 (Register 4*x*+2, analog value sent on channel 2)															
15	14	13	12	11	10	9	8	7	6	5	4	3	2	1	0

Output Word 4 (Register 4*x*+3, analog value sent on channel 3)															
15	14	13	12	11	10	9	8	7	6	5	4	3	2	1	0

Output Word 5 (Register 4*x*+4, analog value sent on channel 4)															
15	14	13	12	11	10	9	8	7	6	5	4	3	2	1	0

Output Ranges

Overview

This section contains illustrations explaining the analog/digital relation for the voltage and current output ranges.

Voltage

The following illustration shows the analog/digital relation for voltage:

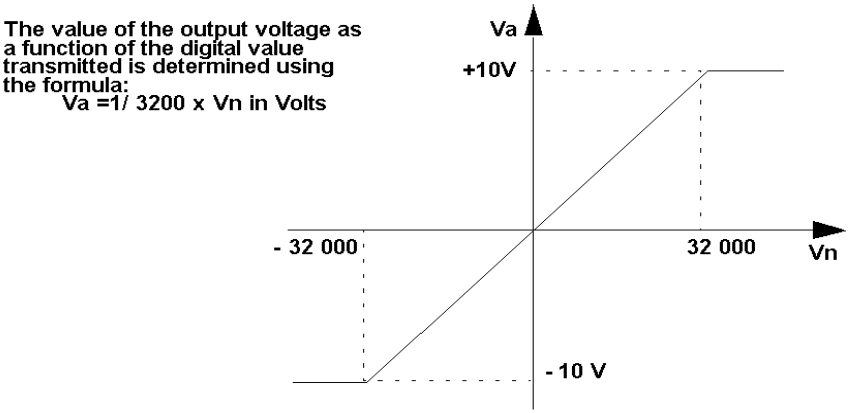

Current

The following illustration shows the analog/digital relation for current:

The value of the output current as a function of the digital value transmitted is determined using the formula:

Ia =1/ 1600 x Vn in mA

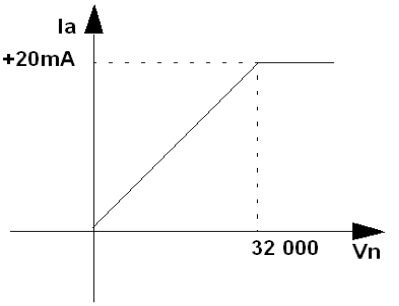

170 AAO 921 00 Analog 4 Channel Output Module Base +/- 10 V, 4 ... 20 mA

10

Overview

This chapter describes the 170 AAO 921 00 TSX Momentum I/O base.

What's in this Chapter?

This chapter contains the following topics:

Topic	Page
Front Panel Components	156
Specifications	158
Internal Pin Connections	160
Field Wiring Guidelines	161
Wiring Diagrams	163
I/O Mapping	164
Analog Channel Parameters	165
Analog Outputs	167
Output Ranges	168

Front Panel Components

Overview

This section contains an illustration of the front panel of the 170 AAO 921 00 I/O base and a description of the LEDs.

Front Panel Illustration

The front panel of the I/O base is shown in the illustration below.

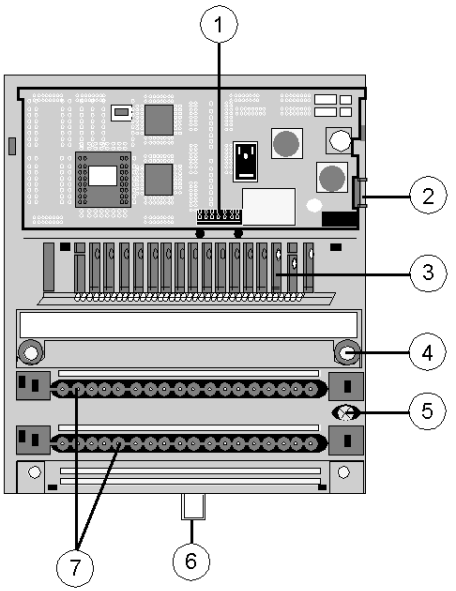

Components of the I/O module

Label	Description
1	Internal interface (ATI) connector
2	Locking and ground contact for the adapter
3	LED status display
4	Mounting holes for panel mount
5	Grounding screw
6	Locking tab for DIN rail mount
7	Sockets for the terminal connectors

LED Illustration

This I/O base has one LED, the ready indicator shown in the illustration below.

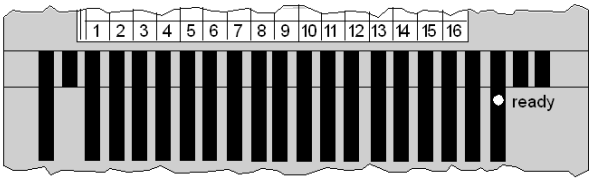

LED Descriptions

The ready indicator is described in the table below.

Indicator	Condition	Message
Ready	Green	Module is ready to communicate. Operating voltage for internal logic is present and self-test has been passed.
	Off	Module is not ready. Operation voltage is not present or module is defective.

Specifications

Overview

This section contains specifications for the 170 AAO 921 00 I/O base.

General Specifications

Module type	4 analog outputs
Output range	+/- 10 V 4 ... 20 mA
Supply voltage	24 VDC
Supply voltage range	20 ... 30 VDC
Supply current consumption (base)	max. 530 mA at 24 VDC
Supply current consumption (actuators)	max. 150 mA at 24 VDC (+/- 5 %)
Power dissipation	5.6 W typical 8.5 W maximum
I/O map	5 output words

Isolation

Between channels	none
Between base power supply and ground	500 Vcc, 1 min
Between channels and ground	500 VAC, 1 min
Output protections	short circuits (in voltage) circuits open in current polarity inversion
Base power supply protection	+/- 30 V (voltage or current output)
Common mode rejection	250 VAC @ 47 ... 63 Hz or 250 VDC Channel-to-ground

Fuses

Internal (not user-replaceable)	2 A slow-blow
External (actuator power supply)	1 A slow-blow (Bussmann GDC-1A or equivalent)

EMC

Immunity	IEC 1131-2 Surge on auxiliary power supply 500V
Emissions	EN 50081-2
Agency approvals	UL, CSA, CE, FM Class 1 Div. 2 pending

Physical Dimensions

Width	125 mm (4.9 in)
Depth (with no adapter)	40 mm (1.54 in)
Length	141.5 mm (5.5 in) with no or one busbar
Weight	215 g (0.45 lb)

NOTE: The 24 VDC actuator power supply is protected in the same way as the analog outputs (different from the base power supply).

Analog Outputs

Number of channels	4	
Format of transmitted data	full 16 bits signed (2's complement)	
Protection (base and actuators)	polarity inversion	
Range	+/-10 V	4 ... 20 mA (current source or sink)
Load impedance	1 KOhm minimum	600 Ohms maximum
Capacitative load	< 1 micro F	< 1 micro F
Error at 25 deg. C	0.2% PE*	0.4% PE*
Error at 60 deg. C	0.25% PE*	0.5% PE*
Temperature drift (60 deg. C)	10ppmPE*/ deg. C	30ppmPE*/ deg. C
Resolution	12 bits + sign	12 bits + sign
Update time for the 4 outputs	2 ms	

NOTE: *Not to be confused with Protective Earth. PE is used here as a European notation for full scale, with the following values:

- 10 V in range of +/- 10 V
- 20mA in range of 4 ... 20 mA

Internal Pin Connections

Overview

This section contains an illustration showing the internal connections between terminals on the I/O base.

Illustration

The following illustration shows the internal connections between terminals.

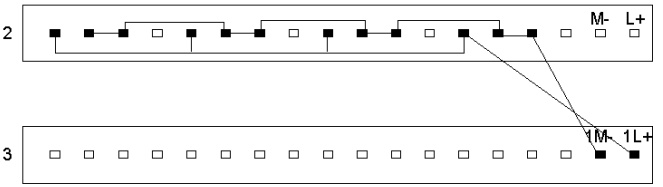

Field Wiring Guidelines

Overview

This section contains wiring guidelines and precautions.

Terminal Connector

To connect field devices to the I/O base, you need a field wiring terminal connector. Schneider Electric sells terminal connectors in sets of three.

Type	Part Number
Screw-in	170 XTS 001 00
Spring-clip	170 XTS 002 00

Mapping Terminal Blocks

⚠ CAUTION

POTENTIAL FOR SHORT CIRCUITS AND/OR POWER-UP SPIKES

Provide external fuses on the operating voltage to protect the module. Appropriate fuse values are shown in the wiring illustration. An unprotected module may be subject to short circuits and/or power-up spikes.

Failure to follow these instructions can result in injury or equipment damage.

Mapping terminal blocks is described in the table below.

Row	Terminal No.	Description	Function
2	4, 8, 12, 16	-	Not used
	1, 5, 9, 13	1L+	+24 V actuator power supply output
	2, 3, 6, 7, 10, 11, 14, 15	1M-	Actuator power supply neg. 0 V return
	17	M-	Module power supply 0 V
	18	L+	Module power supply +24V

Row	Terminal No.	Description	Function
3	1, 5, 9, 13	OUTI1-, OUTI2- OUTI3-, OUTI4-	Output current mode (sink) Channels 1 ... 4
	2, 6, 10, 14	OUTI1+, OUTI2+ OUTI3+, OUTI4+	Output current mode (source) Channels 1 ... 4
	3, 7, 11, 15	OUTU1+, OUTU2+ OUTU3+, OUTU4+	Output voltage mode Channels 1 ... 4
	4, 8, 12, 16	-	Not used
	17	1M-	Actuator power supply neg. 0 V return
	18	1L+	+24 V actuator power supply output

Fuse Required

The 1 A slow-blow fuse shown in the wiring diagram *(see page 163)* must be wired into the actuator power supply.

Signal Protection

To protect the signal from external noise induced in serial or common mode, we recommend the following precautions.

- Use shielded twisted-pair cables with a minimum conductor cross section of 24 AWG or 0.22mm^2.
- Connect the cable shield to ground via the cable grounding rail (part number CER 001).
- You may combine the analog inputs on this I/O base in one multi-pair cable provided they have the same reference relative to ground.
- The actuator power supply must be protected in the same way as the signal itself.

Wiring Diagrams

Overview

This section contains a diagram to assist you in wiring the following types of devices:

- output voltage
- output current (source mode)
- output current (sink) voltage

Diagram

Examples of wiring are shown in the diagram below:

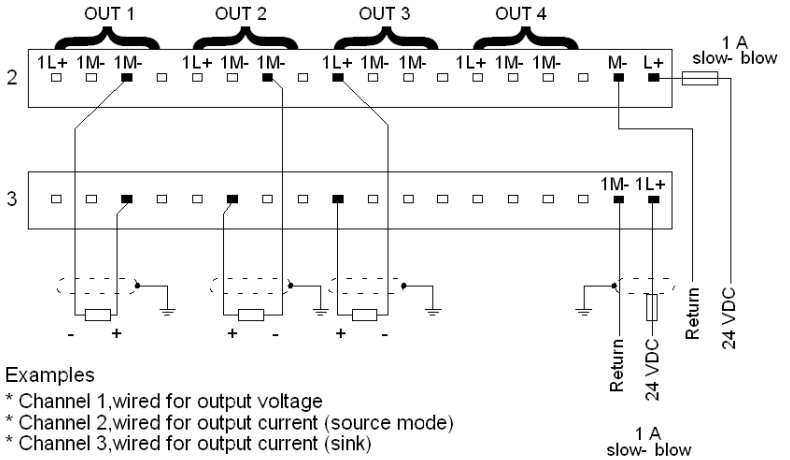

I/O Mapping

Overview

The 170 AAO 921 00 TSX Momentum I/O base supports four analog output channels. This section contains information about the mapping of the I/O data into input words.

I/O Map

The I/O base must be mapped as five contiguos output words, as follows:

Word	Output Data
1 = LSW	Parameters for output channels 1 ... 4
2	Value for output channel 1
3	Value for output channel 2
4	Value for output channel 3
5 = MSW	Value for output channel 4

Analog Channel Parameters

Overview

Parameters must be set for all of the analog channels before the module can be commissioned. This section provides the codes for setting the parameters and gives examples of parameter settings.

NOTE: If you set new parameters for the module, always send a complete set of parameters (all channels, inputs and outputs), even if you only want to change a single parameter. Otherwise the module will refuse the new parameters and continue working with the old ones.

Key

This section focuses on output word 1, as highlighted in the table below:

Word	Output Data
1 = LSW	**Parameters for Output channels 1 ... 4**
2	Value, output channel 1
3	Value, output channel 2
4	Value, output channel 3
5= MSW	Value, output channel 4

Illustration

Parameters are set by entering a four-bit code in output word 1, as follows:

Output Word 1 (Register 4*x*, parameter word)															
15	14	13	12	11	10	9	8	7	6	5	4	3	2	1	0
for output channel 4				for output channel 3				for output channel 2				for output channel 1			

Parameter Codes

The value entered in this word defines the behaviour of the I/O module in case of loss of communication. Each 4-bit nibble in output word 1 must be configured with one of the following binary codes to define the channel parameters. Parameters must be set for all four channels before the module can be commissioned.

In each case, the x may be a 0 or a 1:

Code	Output Parameter)	Function
0000	Reserved value	Forces the I/O base into a default condition where it continues to receive field inputs according to the previous received channel parameters.
00x1	Output to Zero	Sends a value to the base that causes it to apply zero at the field output.
01x1	Full Range	Sends a value to the base that causes it to apply full scale (+10 V or + 20 mA) at the field output.
10x1	Output Last Value	Sends a value to the base that causes it to apply the last received value at the field output.

Analog Outputs

Overview

This section describes how to interpret the value of the analog output channels.

Key

This section describes output words 2 ... 5, as highlighted in the table below:

Word	Output Data
1	Parameters for output channels 1 ... 4
2	**Value, input channel 1**
3	**Value, input channel 2**
4	**Value, input channel 3**
5	**Value, input channel 4**

Analog Output Values

Mapping of analog output values is shown below.

Output Word 2 (Register 4*x*+1, analog value sent on channel 1)															
15	14	13	12	11	10	9	8	7	6	5	4	3	2	1	0

Output Word 3 (Register 4*x*+2, analog value sent on channel 2)															
15	14	13	12	11	10	9	8	7	6	5	4	3	2	1	0

Output Word 4 (Register 4*x*+3, analog value sent on channel 3)															
15	14	13	12	11	10	9	8	7	6	5	4	3	2	1	0

Output Word 5 (Register 4*x*+4, analog value sent on channel 4)															
15	14	13	12	11	10	9	8	7	6	5	4	3	2	1	0

Output Ranges

Overview

This section contains illustrations explaining the analog/digital relation for the voltage and current output ranges.

+/- 10 V

The following illustration shows the analog/digital relation at +/- 10 V:

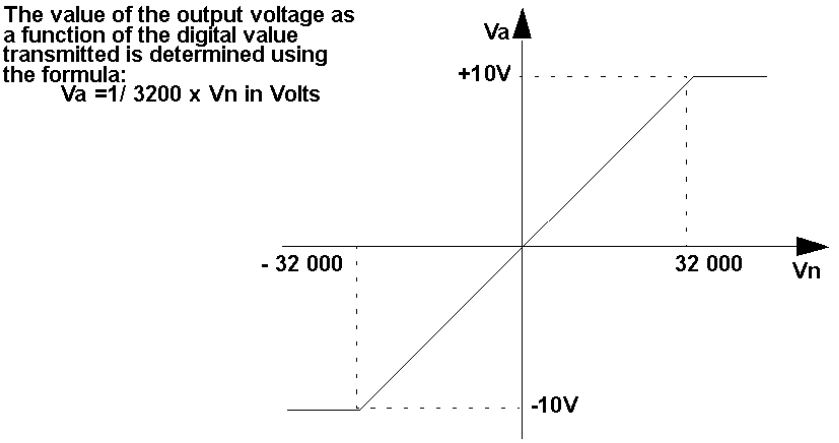

4 ... 20 mA

The following illustration shows the analog/digital relation at 4 ... 20 mA current:

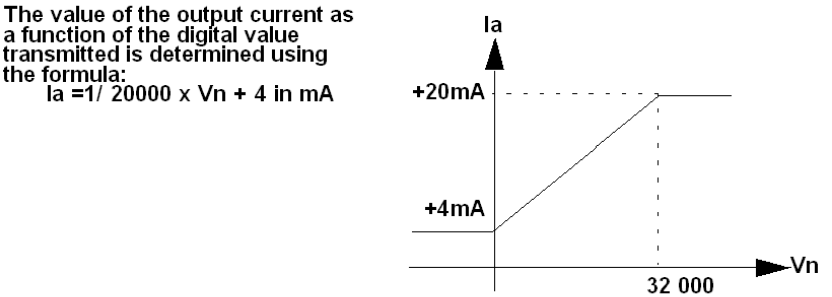

170 ADI 340 00 24 VDC - 16 Pt. Discrete Input Module Base

11

Overview

This chapter describes the 170 ADI 340 00 TSX Momentum I/O base.

What's in this Chapter?

This chapter contains the following topics:

Topic	Page
Front Panel Components	170
Specifications	172
Internal Pin Connections	174
Field Wiring Guidelines	175
Wiring Diagrams	177
I/O Mapping	179

Front Panel Components

Overview

This section contains a photograph of the front panel of the 170 ADI 340 00 I/O base and a description of the LEDs.

Front Panel Illustration

The front panel of the I/O base is shown in the illustration below.

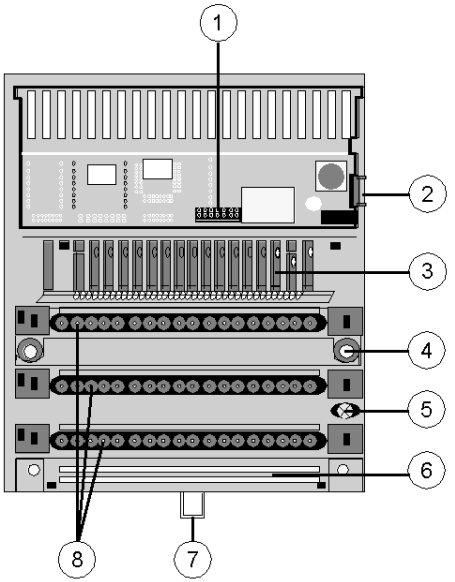

Label	Description
1	Internal interface (ATI) connector
2	Locking and ground contact for the adapter
3	LED status display
4	Mounting holes for panel mount
5	Grounding screw
6	Busbar Mounting Slot
7	Locking tab for DIN rail mount
8	Sockets for the terminal connectors

LED Illustration

This I/O base has one LED, the ready indicator shown in the illustration below.

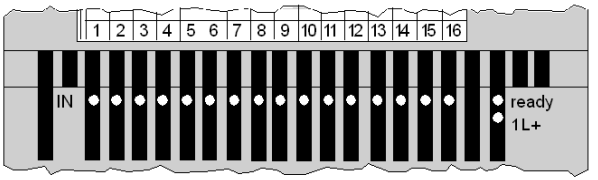

LED Descriptions

The ready indicator is described in the table below.

Indicator	Condition	Message
Ready	Green	Module is ready to communicate. Operating voltage for internal logic is present and self-test has been passed.
	Off	Module not ready
1L+	Green	Input voltage 1L+ of inputs 1 ... 16 is present
	Off	Input voltage of inputs 1 ... 16 is not present
IN 1...16	Green	Input status (an LED per input); input point active, i.e. input carries a 1 signal (logically ON)
	Off	Input status (an LED per input); input point inactive, i.e. input carries a 0 signal (logically OFF)

Specifications

Overview

This section contains specifications for the 170 ADI 340 00 I/O base.

General Specifications

Module type	16 discrete inputs in 1 group
Supply voltage	24 VDC
Supply voltage range	20...30 VDC
Supply current consumption	max. 250 mA at 24 VDC
Power dissipation	6 W + (# of input points on x .144 W)
I/O map	1 input word

Isolation

Input to input	none
Field to communication adapter	Defined by Communication Adapter type

Fuses

Internal	none
External: operating voltage	1 A slow-blow (Bussmann GDC-1A or equivalent)
External: input voltage	According to the supply of the connected sensors– not to exceed 4A fast-blow

EMC

Immunity	IEC 1131-2 Surge on auxiliary power supply 500V
Emissions	EN 50081-2
Agency approvals	UL, CSA, CE, FM Class 1 Div. 2

Physical Dimensions

Width	125 mm (4.9 in)
Depth (with no adapter)	40 mm (1.54 in)
Length	141.5 mm (5.5 in) no or one busbar 159.5mm (6.3in) two busbars 171.5 mm (6.75in) three busbars
Weight	190 g (0.42 lb)

Discrete Inputs

Number of points	16
Number of groups	1
Points per group	16
Signal type	True High
IEC 1131 type	1+ (See appendix *IEC 1131 Input Types, page 673* for definitions of IEC input types.)
ON voltage	+11 ... +30 VDC
OFF voltage	-3 ... +5 VDC
Input current	2.5 mA minimum ON (6 mA at 24 VDC 1.2 mA maximum OFF
Input voltage range	-3 ... +30 VDC
Input resistance	4 kOhm
Response time	2.2 ms OFF to ON 3.3 ms ON to OFF

Internal Pin Connections

Overview

This section contains an illustration showing the internal connections between terminals on the I/O base and an optional one-row busbar.

Illustration

Rows 1 through 3 show the internal connections between terminals on the I/O base. Row 4 shows the internal connections on the optional busbar.

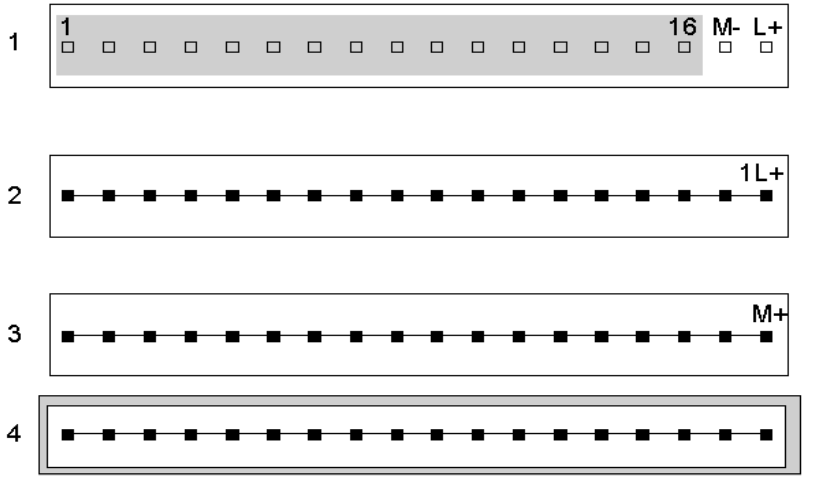

Field Wiring Guidelines

Overview

Inputs are field wired to row 1 of the base. This section contains wiring guidelines and precautions.

Terminal Connector

To connect field devices to the I/O base, you need a field wiring terminal connector. Schneider Electric sells terminal connectors in sets of three.

Type	Part Number
Screw-in	170 XTS 001 00
Spring-clip	170 XTS 002 00

Busbar May Be Required

If you are using 4-wire devices, you will need a 1-row busbar to connect them to protective earth (PE).

Type	Part Number
Screw-in	170 XTS 006 01
Spring-clip	170 XTS 007 01

Mapping Terminal Blocks

⚠ CAUTION

POTENTIAL FOR SHORT CIRCUITS AND/OR POWER-UP SPIKES

Provide external fuses on the operating voltage to protect the module. Appropriate fuse values are shown in the wiring illustration. An unprotected module may be subject to short circuits and/or power-up spikes.

Failure to follow these instructions can result in injury or equipment damage.

A busbar may be attached to this I/O base to provide a fourth row for protective earth (PE).

Row	Terminal	Function
1	1...16	Inputs
	17	Return (M-)
	18	+ 24 VDC Operating voltage (L+)
2	1 ... 17	Sensor/input device voltages
	18	+ 24 VDC for inputs
3	1 ... 17	Returns for sensor/input devices (for 3-and 4-wire devices)
	18	Return for inputs
4	1 ... 18	Protective earth (PE)

Wiring Diagrams

Overview

This section contains an illustration to assist you in wiring the following types of devices:

- 4-wire configuration
- 3-wire configuration
- 2-wire configuration

2-Wire Devices

The diagram below shows an example of wiring for 2-wire devices:

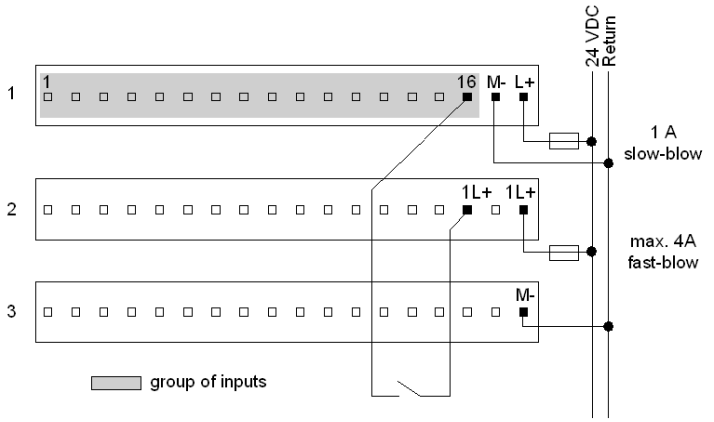

3- and 4-Wire Devices

The diagram below shows an example of wiring for 3- and 4-wire devices:

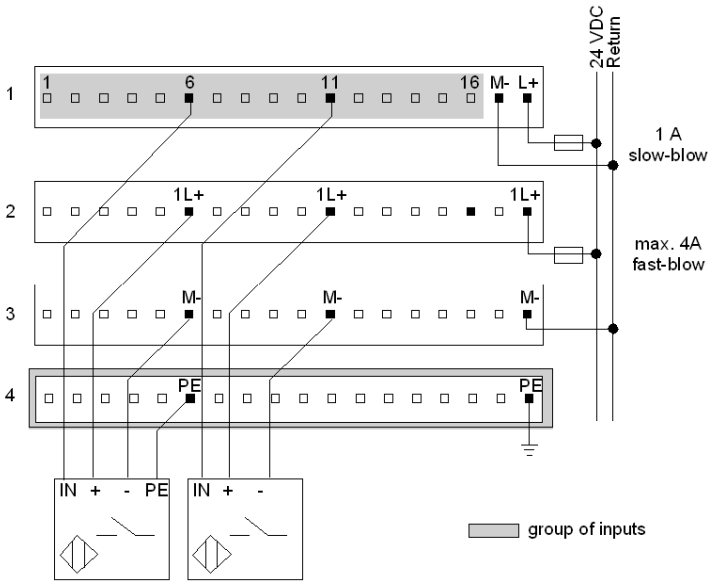

A 1-row busbar is used to provide PE for the 4-wire sensor. No busbar would be required if only 2- and/or 3-wire sensors were used.

Simplified Schematics

The following diagram shows the field-side input circuitry.

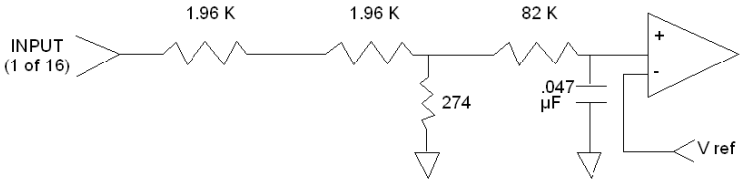

I/O Mapping

Overview

The 170 ADI 340 00 TSX Momentum I/O base supports 16 discrete inputs. This section contains information about the mapping of the I/O data into input words.

I/O Map

The I/O base may be mapped as one input word, or as 16 discrete input points.

IEC vs. Ladder Logic

In order to correctly field wire the inputs and map the input data, you need to know which type of Momentum Adapter is mounted on the base. Adapters may either be IEC compliant or 984 Ladder Logic compliant.

	IEC Compliant	**984 Ladder Logic Compliant**
Momentum Processor Adapters	All	None
Momentum Communication Adapters	All, except 170 NEF 110 21 170 NEF 160 21 170 FNT 110 00 170 FNT 110 01	170 NEF 110 21 170 NEF 160 21 170 FNT 110 00 170 FNT 110 01

Data Mapping

The figure below shows how data is mapped on the I/O base with an IEC Compliant adapter. When the I/O is mapped as discrete points (1x), the MSB is assigned to Pin 1 and the LSB is assigned to Pin 16. When the I/O is mapped as a word or register (3x), the MSB (bit 15) is assigned to Pin 16 and the LSB (bit 0) is assigned to Pin 1.

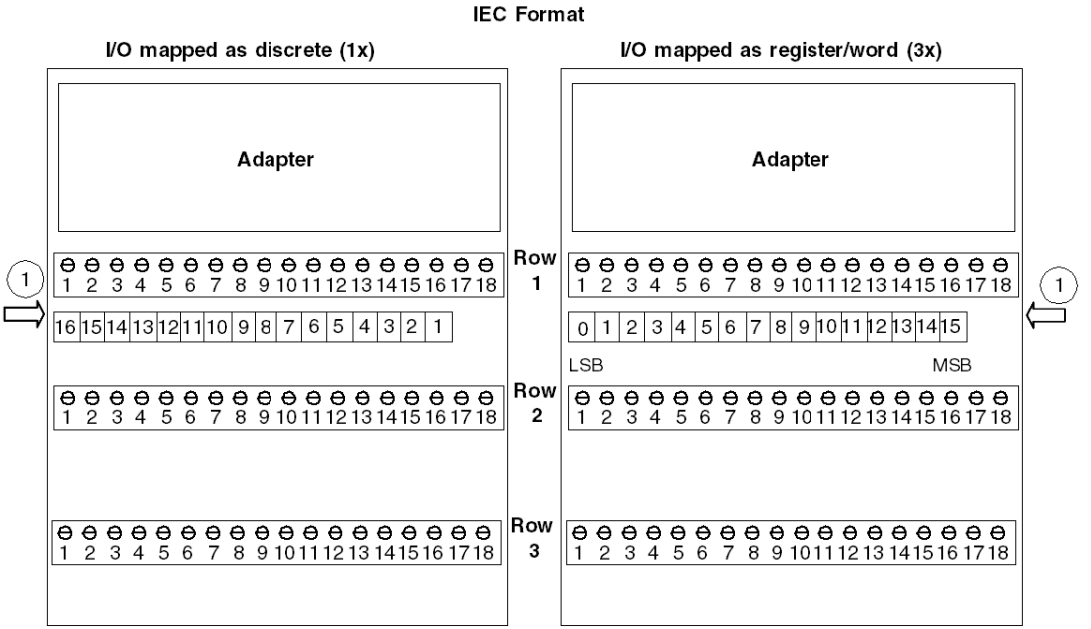

1 inputs

The figure below shows how data is mapped on the I/O base with a 984 Ladder Logic Compliant adapter. When the I/O is mapped as discrete points (1x), the MSB is assigned to Pin 16 and the LSB is assigned to Pin 1. When the I/O is mapped as a word or register (3x), the MSB is assigned to Pin 1(bit 15) and the LSB (bit 0) is assigned to Pin 16.

984 Format

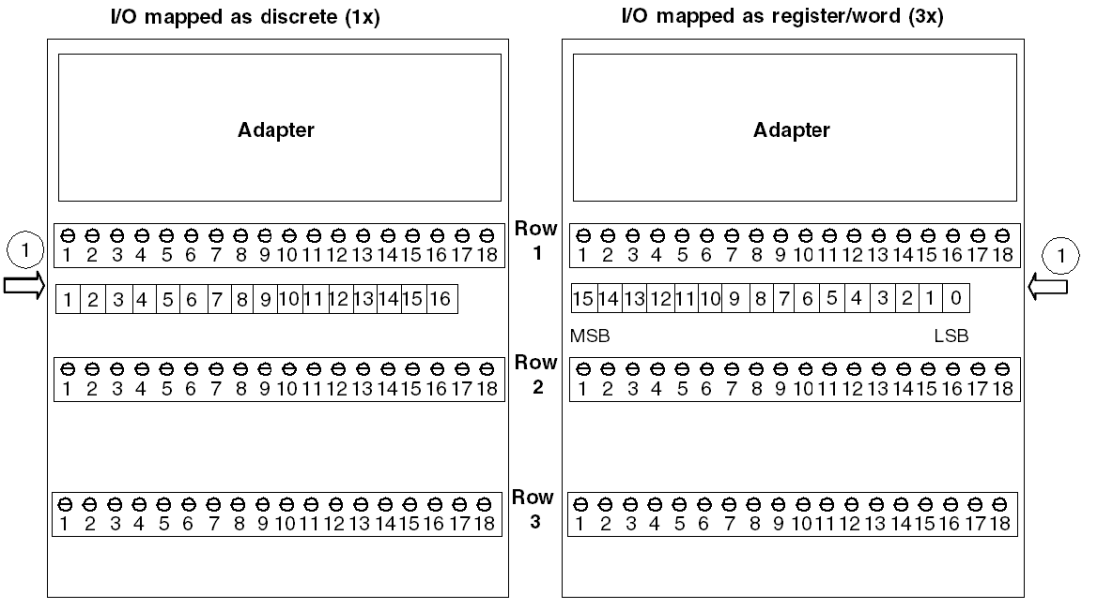

1 inputs

170 ADI 350 00 24 VDC - 32 Pt. Discrete Input Module Base

12

Overview

This chapter describes the 170 ADI 350 00 TSX Momentum I/O base.

What's in this Chapter?

This chapter contains the following topics:

Topic	Page
Front Panel Components	184
Specifications	186
Internal Pin Connections	188
Field Wiring Guidelines	189
Wiring Diagrams	191
I/O Mapping	193

Front Panel Components

Overview

This section contains a photograph of the front panel of the 170 ADI 350 00 I/O base and a description of the LEDs.

Front Panel Illustration

The front panel of the I/O base is shown in the illustration below.

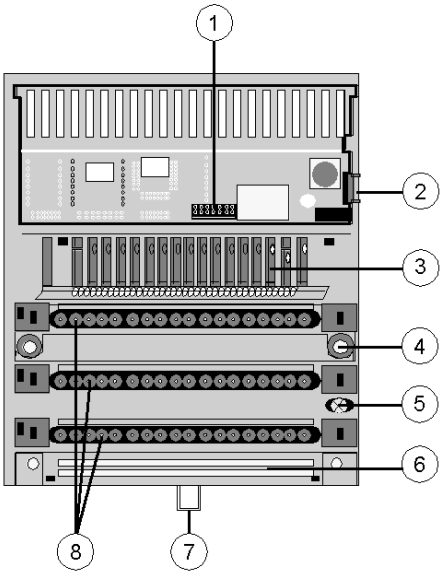

Components of the I/O module

Label	Description
1	Internal interface (ATI) connector
2	Locking and ground contact for the adapter
3	LED status display
4	Mounting holes for panel mount
5	Grounding screw
6	Busbar Mounting Slot
7	Locking tab for DIN rail mount
8	Sockets for the terminal connectors

LED Illustration

The LEDs are shown in the illustration below.

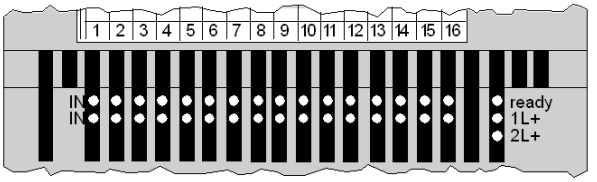

LED Descriptions

The LEDs are described in the table below.

Indicator	Condition	Message
Ready	Green	Module is ready to communicate. Operating voltage for internal logic (5 V) is present
	Off	Module not ready
1L+	Green	Input voltage 1L+ of inputs 1 ... 16 (group 1) is present
	Off	Input voltage of inputs 1 ... 16 (group 1) is not present
2L+	Green	Input voltage 2L+ of inputs 17 ... 32 (group 2) is present
	Off	Input voltage of inputs 17 ... 32 (group 2) is not present
Upper row IN 1...16	Green	Input status (an LED per input) group 1; input point active, i.e. input carries a 1 signal (logically ON)
	Off	Input status (an LED per input) group 1; input point inactive, i.e. input carries a 0 signal (logically OFF)
Middle row IN 1...16	Green	Input status (an LED per input) group 2; input point active, i.e. input carries a 1 signal (logically ON)
	Off	Input status (an LED per input) group 2; input point inactive, i.e. input carries a 0 signal (logically OFF)

Specifications

Overview

This section contains specifications for the 170 ADI 350 00 I/O base.

General Specifications

Module type	32 discrete inputs in 2 groups (16 inputs per group)
Supply voltage	24 VDC
Supply voltage range	20...30 VDC
Supply current consumption	max. 250 mA at 24 VDC
Power dissipation	6 W + (# of input points on x .144 W)
I/O map	2 input word

Isolation

Input to input	none
Field to communication adapter	Defined by Communication Adapter type

Fuses

Internal	none
External: operating voltage	1 A slow-blow (Bussmann GDC-1A or equivalent)
External: input voltage	According to the supply of the connected sensors– not to exceed 4A fast-blow

EMC

Immunity	IEC 1131-2 Surge on auxiliary power supply 500V
Emissions	EN 50081-2
Agency approvals	UL, CSA, CE, FM Class 1 Div.2 pending

Physical Dimensions

Width	125 mm (4.9 in)
Depth (with no adapter)	40 mm (1.54 in)
Length	141.5 mm (5.5 in) no or one busbar 159.5mm (6.3in) two busbars 171.5 mm (6.75in) three busbars
Weight	200 g (0.44 lb)

Discrete Inputs

Number of points	32
Number of groups	2
Points per group	16
Signal type	True High
IEC 1131 type	1+ (See appendix *IEC 1131 Input Types, page 673* for definitions of IEC input types.)
ON voltage	+11 ... +30 VDC
OFF voltage	-3 ... +5 VDC
Input current	2.5 mA minimum ON(6 mA at 24 VDC 1.2 mA maximum OFF
Input voltage range	-3 ... +30 VDC
Input resistance	4 kOhm
Response time	2.2 ms OFF to ON 3.3 ms ON to OFF

Internal Pin Connections

Overview

This section contains an illustration showing the internal connections between terminals on the I/O base and an optional busbar.

Illustration

Rows 1 through 3 show the internal connections between terminals on the I/O base. Row 4 through 6 show the internal connections on the optional busbar.

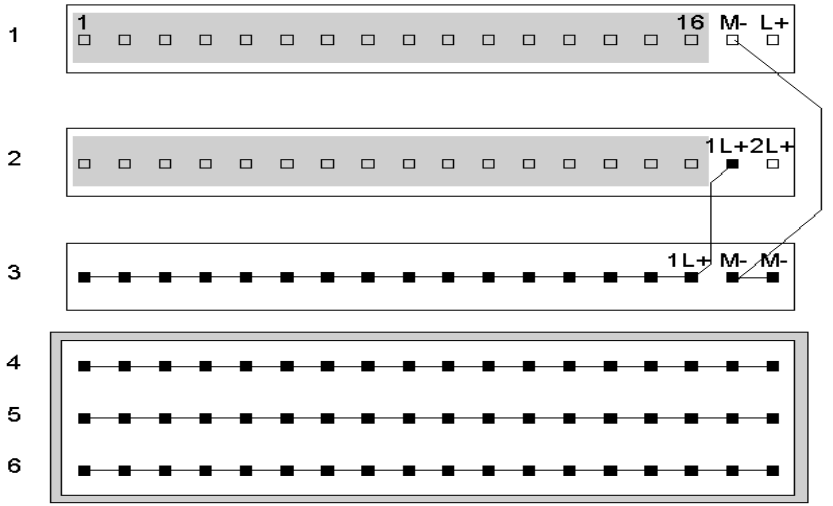

Field Wiring Guidelines

Overview

This section contains wiring guidelines and precautions.

Terminal Connector

To connect field devices to the I/O base, you need a field wiring terminal connector. Schneider Electric sells terminal connectors in sets of three.

Type	Part Number
Screw-in	170 XTS 001 00
Spring-clip	170 XTS 002 00

Busbar May Be Required

Depending on the type of field devices you are using, you may need a 1-, 2-, or 3-row busbar. The following busbars are available from Schneider Electric:

Type	Number of Rows	Part Number
Screw-in	1 - row	170 XTS 006 01
	2 - row	170 XTS 005 01
	3 - row	170 XTS 004 01
Spring-clip	1 - row	170 XTS 007 01
	2 - row	170 XTS 008 01
	3 - row	170 XTS 003 01

Mapping Terminal Blocks

⚠ CAUTION

POTENTIAL FOR SHORT CIRCUITS AND/OR POWER-UP SPIKES

Provide external fuses on the operating voltage to protect the module. Appropriate fuse values are shown in the wiring illustration. An unprotected module may be subject to short circuits and/or power-up spikes.

Failure to follow these instructions can result in injury or equipment damage.

The following table shows mapping terminal blocks and optional busbars.

Row	Terminal	Function
1	1...16	Inputs for group 1
	17	Return (M-)
	18	+ 24 VDC Operating voltage (L+)
2	1 ... 16	Inputs for group 2
	17/18	+ 24 VDC for input group 1 (1L+) and group 2 (2L+)
3	1 ... 16	Input voltage for inputs 1 ... 16
	17/18	Return (M-)
4	1 ... 18	Input voltage for inputs 17 ... 32
5	1 ... 18	Return (M-)
6	1 ... 18	Return (M-) or Protective earth (PE)

Wiring Diagrams

Overview

This section contains a diagram to assist you in wiring the following types of devices:

- 2-wire configuration
- 3-wire configuration

2-Wire Devices

The diagram below shows an example of wiring for two-wire devices. This example uses an input from one group of input points. If you feed inputs using points from both input groups, you will need a busbar.

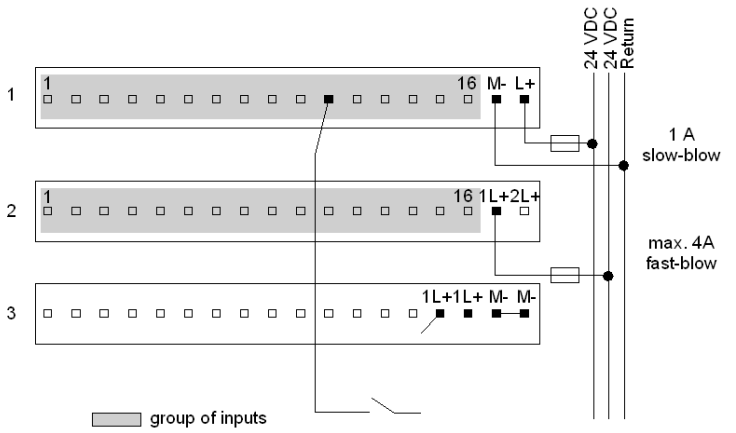

3-Wire Devices

The diagram below shows an example of wiring for 3-wire devices:

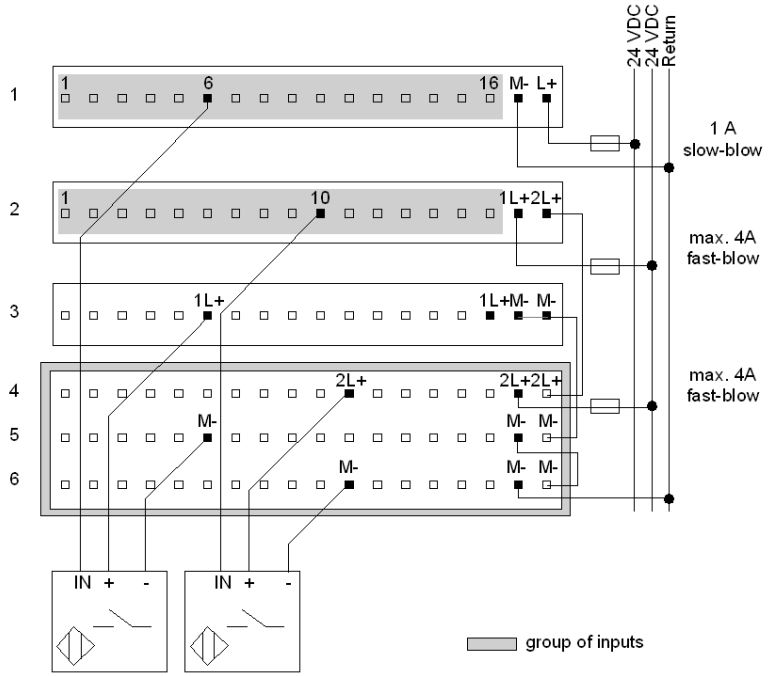

Simplified Schematics

The following diagram shows the field-side input circuitry.

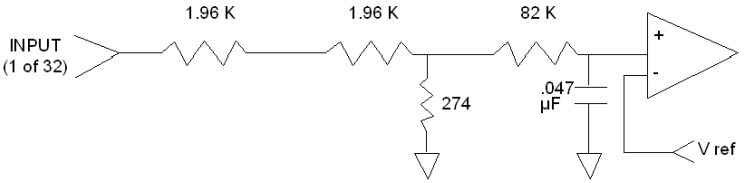

I/O Mapping

Overview

The 170 ADI 350 00 TSX Momentum I/O base supports 32 discrete inputs. This section contains information about the mapping of the I/O data into input words.

I/O Map

The I/O base may be mapped as two 16-bit input words, or as 32 discrete input points.

IEC vs. Ladder Logic

In order to correctly field wire the inputs and map the input data, you need to know which type of Momentum Adapter is mounted on the base. Adapters may be either IEC compliant or 984 Ladder Logic compliant:

	IEC Compliant	**984 Ladder Logic Compliant**
Momentum Processor Adapters	All	None
Momentum Communication Adapters	All, except 170 NEF 110 21 170 NEF 160 21 170 FNT 110 00 170 FNT 110 01	170 NEF 110 21 170 NEF 160 21 170 FNT 110 00 170 FNT 110 01

Data Mapping

The figure below shows how data is mapped on the I/O base with an IEC Compliant adapter. When the I/O is mapped as discrete points (1x), the MSB is assigned to Pin 1 and the LSB is assigned to Pin 16. When the I/O is mapped as a word or register (3x), the MSB (bit 15) is assigned to Pin 16 and the LSB (bit 0) is assigned to Pin 1.

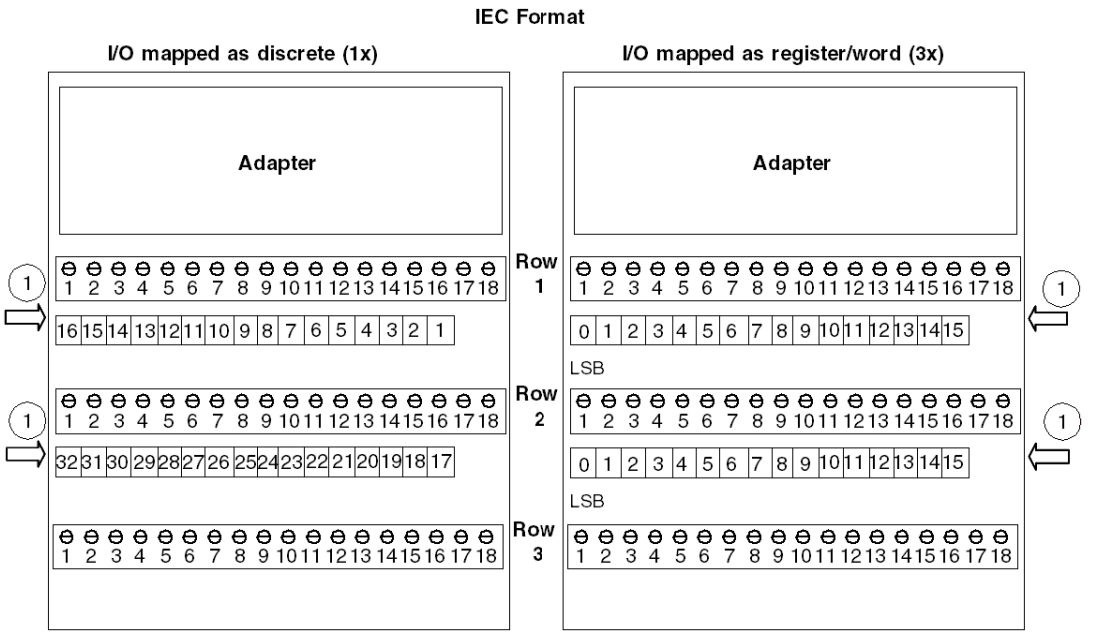

1 inputs

The figure below shows how data is mapped on the I/O base with a 984 Ladder Logic Compliant adapter. When the I/O is mapped as discrete points (1x), the MSB is assigned to Pin 16 and the LSB is assigned to Pin 1. When the I/O is mapped as a word or register (3x), the MSB (bit15) is assigned to Pin 1 and the LSB (bit 0) is assigned to Pin 16.

984 Format

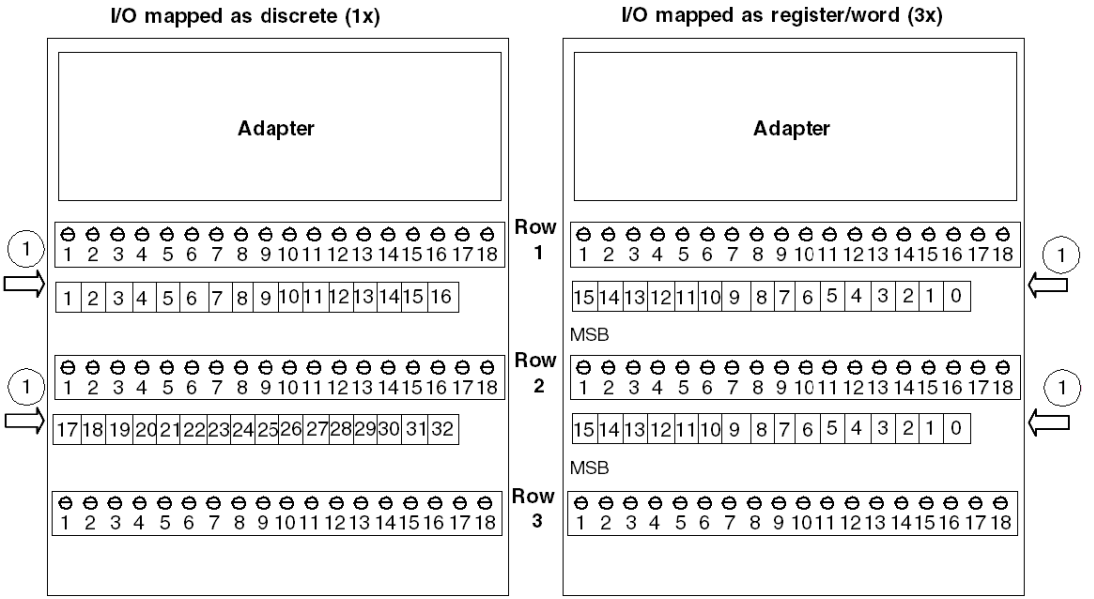

1 inputs

170 ADI 540 50 120 VAC - 16 Point Discrete Input Module Base

13

Overview

This chapter describes the 170 ADI 540 50 TSX Momentum I/O base.

What's in this Chapter?

This chapter contains the following topics:

Topic	Page
Front Panel Components	198
Specifications	200
Internal Pin Connections	203
Field Wiring Guidelines	204
Wiring Diagrams	205
I/O Mapping	207

Front Panel Components

Overview

This section contains an illustration of the front panel of the 170 ADI 540 50 I/O base and a description of the LEDs.

Front Panel Illustration

The front panel of the I/O base is shown in the illustration below.

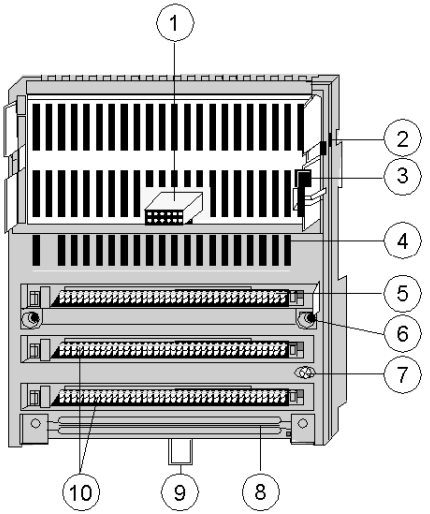

Components of the I/O module

Label	Description
1	Internal interface (ATI) connector
2	Locking tab for the adapter
3	Ground contact for the adapter
4	LED status display
5	Module power and field inputs
6	Mounting holes for panel mount
7	Grounding screw
8	Busbar Mounting Slot
9	Locking tab for DIN rail mount
10	Sockets for the terminal connectors

LED Illustration

The LEDs are shown in the illustration below.

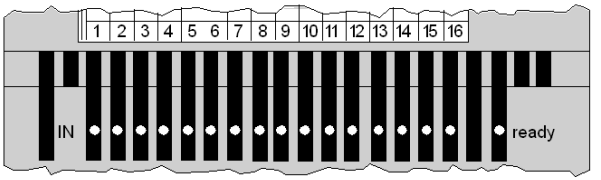

LED Descriptions

The LEDs are described in the table below.

Indicator	Condition	Message
Ready	Green	Module is ready to communicate on network
	Off	Module not ready to communicate
Upper row IN 1 ... 16	Green	Input status (an LED per input); input point active, i.e. input carries a 1 signal (logically ON)
	Off	Input status (an LED per input); input point inactive, i.e. input carries a 0 signal (logically OFF)

Specifications

Overview

This section contains specifications for the 170 ADI 540 50 I/O base.

General Specifications

Module type	16 discrete inputs in 2 groups
Supply voltage	120 VAC
Supply voltage range	85 ... 132 VAC RMS @ 47 ... 63 Hz
Supply current consumption	125 mA at 120 VAC
Power dissipation	4 W + (# of input points on x .62 W)
I/O map	1 input word

Isolation

Input to input	none
Group to Group	1780 VAC
Field to communication adapter	1780 VAC

Fuses

Internal (non-replaceable	200 mA slow-blow
External (module power)	200 mA slow-blow (Wickmann 19502000 mA or equivalent)

EMC

Immunity	IEC 1131-2 Surge on auxiliary power supply 2 kV
Emissions	EN 50081-2
Agency approvals	UL, CSA, CE FM Class 1,Div. 2

Physical Dimensions

Width	125 mm (4.9 in)
Depth (with no adapter)	52 mm (2.05 in)
Length	141.5 mm (5.5 in) no or one busbar 159.5mm (6.3in) two busbars 171.5 mm (6.75in) three busbars
Weight	284 g (10 oz)

Discrete Inputs

Number of points	16
Number of groups	2
Points per group	8
Signal type	True High
Input current	10 mA minimum ON 2 mA maximum OFF
Input resistance (nominal)	9.5 kOhm @ 50 7.5 kOhm @ 60
Switching level	74 VAC minimum ON 20 VAC minimum OFF
Response time	35 ms @ 60 Hz ON to OFF 10 ms @ 60 Hz OFF to ONF

Derating Curve

The diagram below depicts the derating curve for this I/O base.

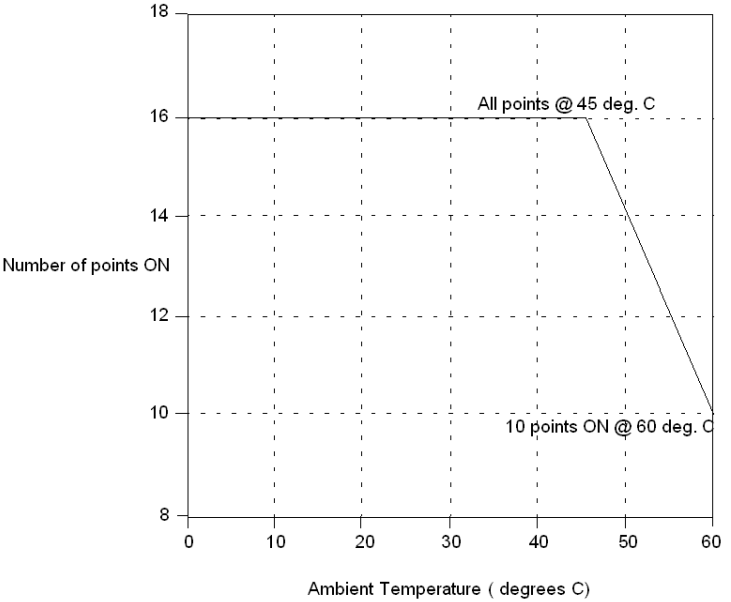

Internal Pin Connections

Overview

This section contains an illustration showing the internal connections between terminals on the I/O base.

Illustration

The following illustration shows the internal connections between terminals.

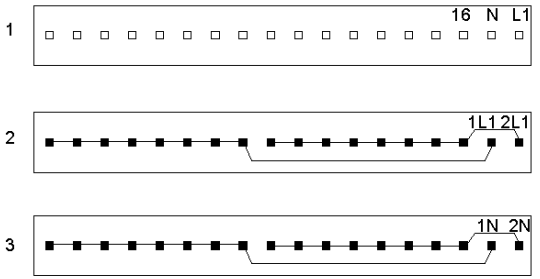

Field Wiring Guidelines

Overview

Inputs are field wired to row 1 of the base. This section contains wiring guidelines and precautions.

Terminal Connector

To connect field devices to the I/O base, you need a field wiring terminal connector. Schneider Electric sells terminal connectors in sets of three.

Type	Part Number
Screw-in	170 XTS 001 00
Spring-clip	170 XTS 002 00

Mapping Terminal Blocks

⚠ CAUTION

POTENTIAL FOR SHORT CIRCUITS AND/OR POWER-UP SPIKES

Provide external fuses on the operating voltage to protect the module. Appropriate fuse values are shown in the wiring illustration. An unprotected module may be subject to short circuits and/or power-up spikes.

Failure to follow these instructions can result in injury or equipment damage.

The following table shows mapping terminal blocks.

Row	Terminal	Function
1	1...16	Inputs
	17	Neutral - 120 VAC for module (N)
	18	Line - 120 VAC for module (L1)
2	1 ... 8	Input group 1 - line (1L1)
	9 ... 16	Input group 2 - line (2L1)
	17	Line for inputs group 1 (1L1)
	18	Line for inputs group 2 (2L1)
3	1 ... 8	Input group 1 - neutral (1N)
	9 ... 16	Input group 2 - neutral (2N)
	17	Neutral for inputs group 1 (1N)
	18	Neutral for inputs group 2 (2N1)

Wiring Diagrams

Overview

This section contains diagrams to assist you in wiring the following types of devices:

- 2-wire configuration
- 3-wire configuration

2-Wire Devices

The diagram below shows an example of wiring for 2-wire devices:

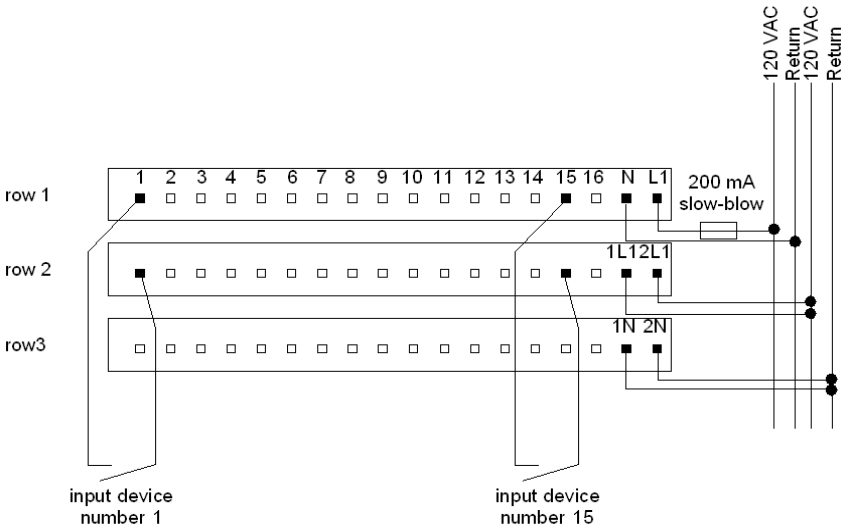

3-Wire Devices

The diagram below shows an example of wiring for 3-wire devices:

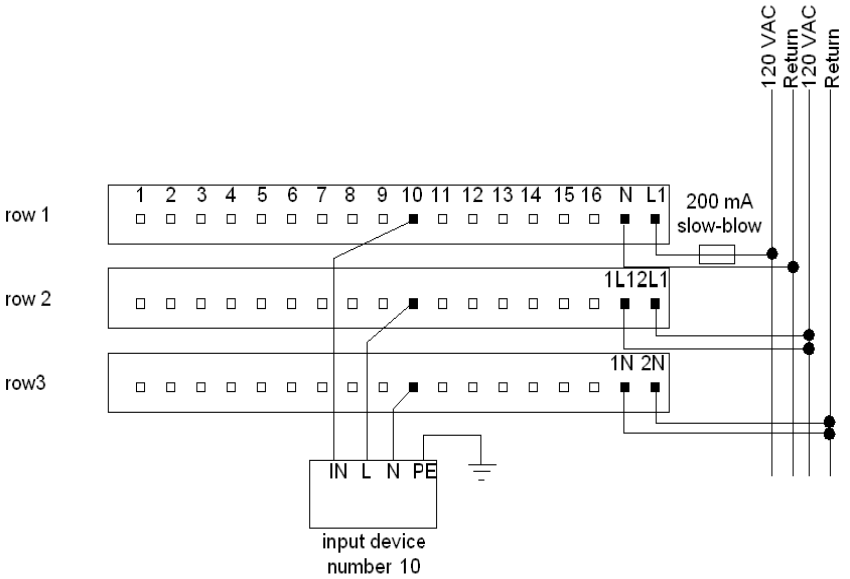

Simplified Schematics

The following diagram shows the field-side input circuitry.

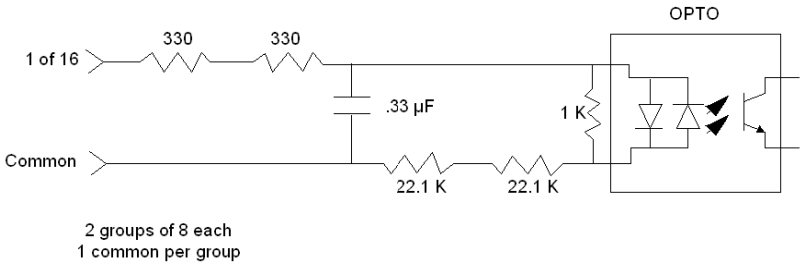

I/O Mapping

Overview

The 170 ADI 540 50 TSX Momentum I/O base supports 16 discrete inputs. This section contains information about the mapping of the I/O data into input words.

I/O Map

The I/O base may be mapped as one input word, or as 16 discrete input points.

IEC vs. Ladder Logic

In order to correctly field wire the inputs and map the input data, you need to know which type of Momentum adapter is mounted on the base. Adapters may be either IEC compliant or 984 ladder logic compliant.

	IEC Compliant	**984 Ladder Logic Compliant**
Momentum Processor Adapters	All	None
Momentum Communication Adapters	All, except 170 NEF 110 21 170 NEF 160 21 170 FNT 110 00 170 FNT 110 01	170 NEF 110 21 170 NEF 160 21 170 FNT 110 00 170 FNT 110 01

Data Mapping

The figure below shows how data is mapped on the I/O base with an IEC compliant adapter. When the I/O is mapped as discrete points (1x), the MSB is assigned to pin 1 and the LSB is assigned to pin 16. When the I/O is mapped as a word or register (3x), the MSB (bit 15) is assigned to pin 16 and the LSB (bit 0) is assigned to pin 1.

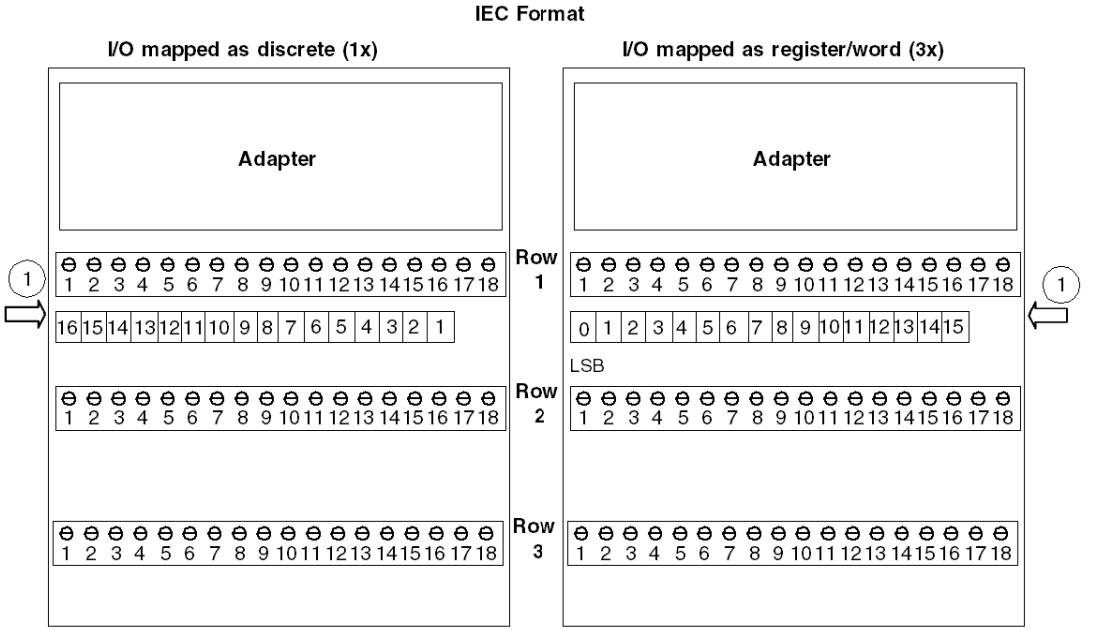

1 inputs

The figure below shows how data is mapped on the I/O base with a 984 ladder logic compliant adapter. When the I/O is mapped as discrete points (1x), the MSB is assigned to pin 16 and the LSB is assigned to pin 1. When the I/O is mapped as a word or register (3x), the MSB (bit 15) is assigned to pin 1 and the LSB (bit 0) is assigned to pin 16.

984 Format

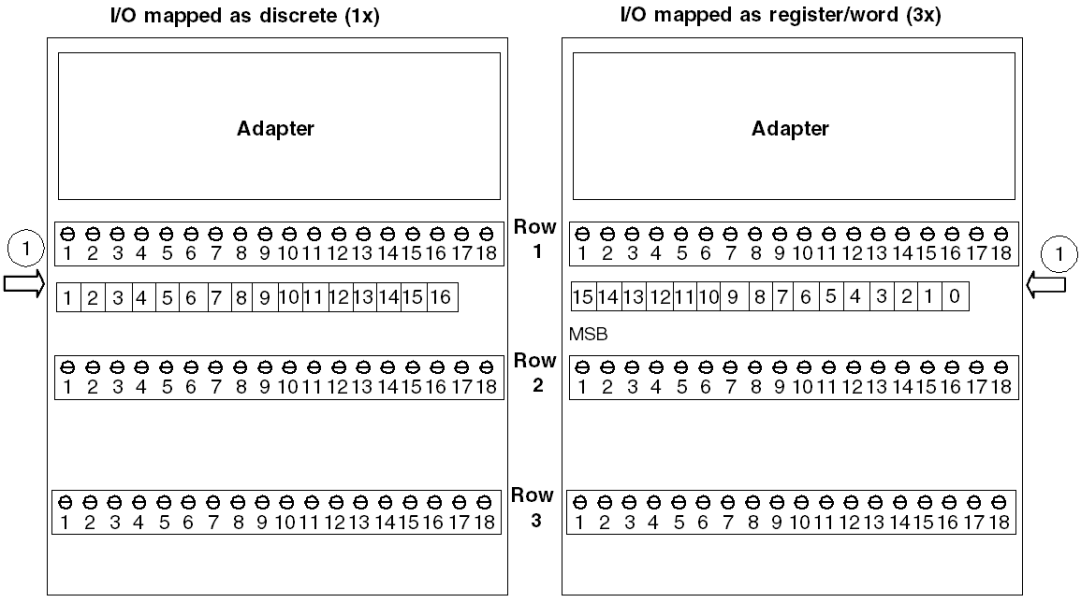

1 inputs

170 ADI 740 50 230 VAC - 16 Point Discrete Input Module Base

14

Overview

This chapter describes the 170 ADI 740 50 TSX Momentum I/O base.

What's in this Chapter?

This chapter contains the following topics:

Topic	Page
Front Panel Components	212
Specifications	214
Internal Pin Connections	217
Field Wiring Guidelines	218
Wiring Diagrams	219
I/O Mapping	221

Front Panel Components

Overview

This section contains an illustration of the front panel of the 170 ADI 740 50 I/O base and a description of the LEDs.

Front Panel Illustration

The front panel of the I/O base is shown in the illustration below.

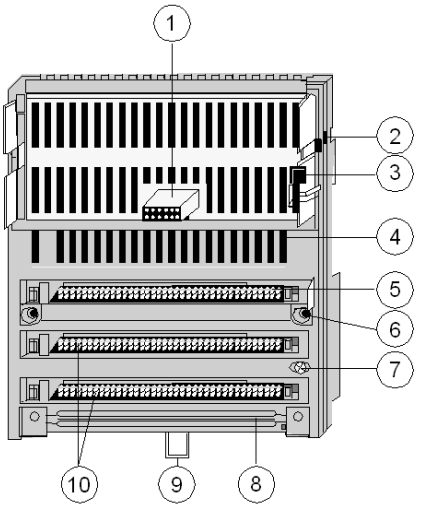

Components of the I/O module

Label	Description
1	Internal interface (ATI) connector
2	Locking tab for the adapter
3	Ground contact for the adapter
4	LED status display
5	Module power and field inputs
6	Mounting holes for panel mount
7	Grounding screw
8	Busbar Mounting Slot
9	Locking tab for DIN rail mount
10	Sockets for the terminal connectors

LED Illustration

The LEDs are shown in the illustration below.

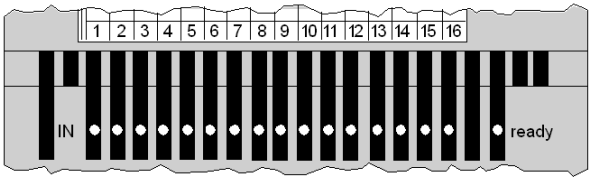

LED Descriptions

The LEDs are described in the table below.

Indicator	Condition	Message
Ready	Green	Module is ready to communicate on network
	Off	Module not ready to communicate
Upper row IN 1 ... 16	Green	Input status (an LED per input); input point active, i.e. input carries a 1 signal (logically ON)
	Off	Input status (an LED per input); input point inactive, i.e. input carries a 0 signal (logically OFF)

Specifications

Overview

This section contains specifications for the 170 ADI 740 50 I/O base.

General Specifications

Module type	16 discrete inputs in 2 groups
Supply voltage	230 VAC
Supply voltage range	164 - 253 VAC RMS @ 47 ... 63 Hz
Supply current consumption	50 mA at 230 VAC
Power dissipation	4 W + (# of input points on x .62 W)
I/O map	1 input word

Isolation

Input to input	none
Group to Group	1780 VAC
Field to communication adapter	1780 VAC

Fuses

Internal (non-replaceable	200 mA slow-blow
External (module power)	200 mA slow-blow (Wickmann 195020000 mA or equivalent)

EMC

Immunity	IEC 1131-2 Surge on auxiliary power supply 2 kV
Emissions	EN 50081-2
Agency approvals	UL, CSA, CE FM Class 1,Div.2 pending

Physical Dimensions

Width	125 mm (4.9 in)
Depth (with no adapter)	52 mm (2.05 in)
Length	141.5 mm (5.5 in) no or one busbar 159.5mm (6.3in) two busbars 171.5 mm (6.75in) three busbars
Weight	284 g (10 oz)

Discrete Inputs

Number of points	16
Number of groups	2
Points per group	8
Signal type	True High
Input current	10 mA minimum ON 2 mA maximum OFF
Input resistance (nominal)	9.5 kOhm @ 50 Hz 7.5 kOhm @ 60 Hz
Switching level	164 VAC minimum ON 40 VAC minimum OFF
Response time	13.3 ms @ 60 Hz ON to OFF 13.0 ms @ 60 Hz OFF to ONF

Derating Curve

The diagram below depicts the derating curve for this I/O base.

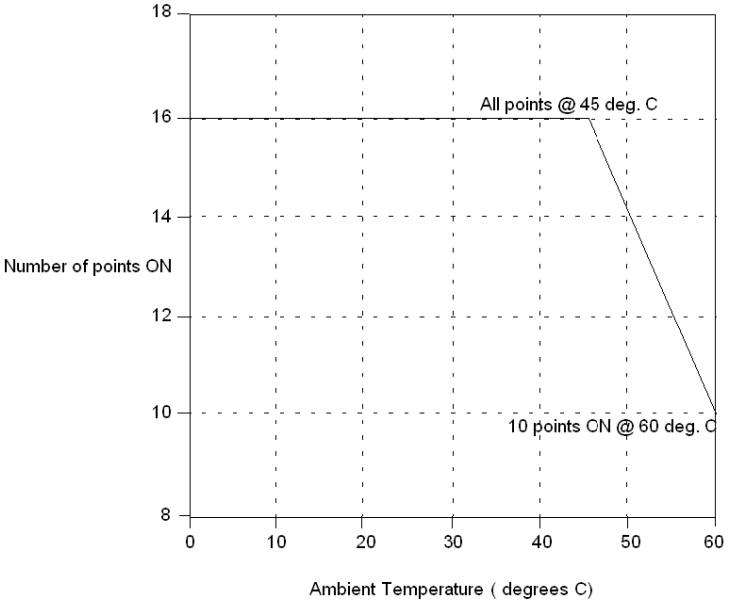

At 60 degrees C and maximum input voltage, the number of points allowed ON is 10.

Internal Pin Connections

Overview

This section contains an illustration showing the internal connections between terminals on the I/O base.

Illustration

The following illustration shows the internal connections between terminals.

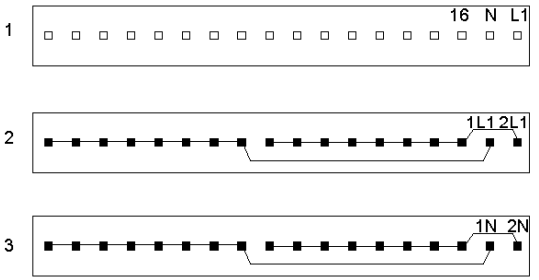

Field Wiring Guidelines

Overview

Inputs are field wired to row 1 of the base. This section contains wiring guidelines and precautions.

Terminal Connector

To connect field devices to the I/O base, you need a field wiring terminal connector. Schneider Electric sells terminal connectors in sets of three.

Type	Part Number
Screw-in	170 XTS 001 00
Spring-clip	170 XTS 002 00

Mapping Terminal Blocks

⚠ CAUTION

POTENTIAL FOR SHORT CIRCUITS AND/OR POWER-UP SPIKES

Provide external fuses on the operating voltage to protect the module. Appropriate fuse values are shown in the wiring illustration. An unprotected module may be subject to short circuits and/or power-up spikes.

Failure to follow these instructions can result in injury or equipment damage.

The following table shows mapping terminal blocks

Row	Terminal	Function
1	1...16	Inputs
	17	Neutral - 230 VAC for module (N)
	18	Line - 230 VAC for module (L1)
2	1 ... 8	Input group 1 - line (1L1)
	9 ... 16	Input group 2 - line (2L1)
	17	Line for inputs group 1 (1L1)
	18	Line for inputs group 2 (2L1)
3	1 ... 8	Input group 1 - neutral (1N)
	9 ... 16	Input group 2 - neutral (2N)
	17	Neutral for inputs group 1 (1N)
	18	Neutral for inputs group 2 (2N1)

Wiring Diagrams

Overview

This section contains diagrams to assist you in wiring the following types of devices:

- 2-wire configuration
- 3-wire configuration

2-Wire Devices

The diagram below shows an example of wiring for 2-wire devices:

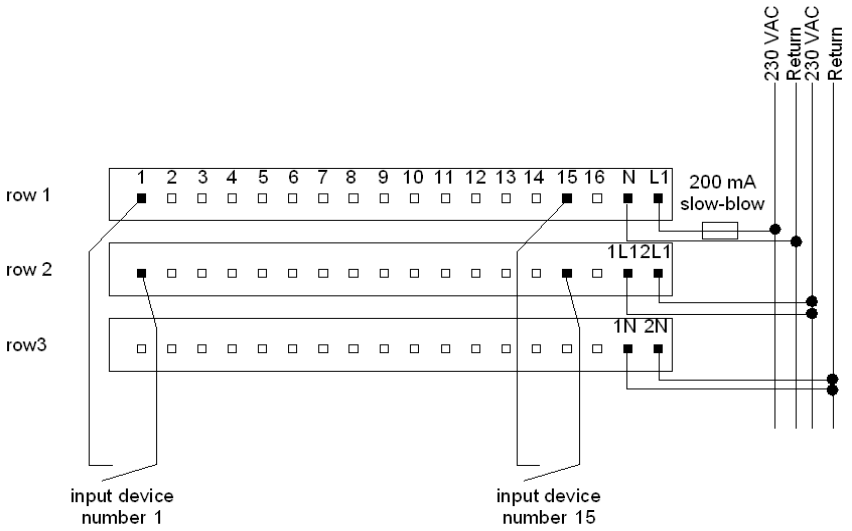

3-Wire Devices

The diagram below shows an example of wiring for 3-wire devices:

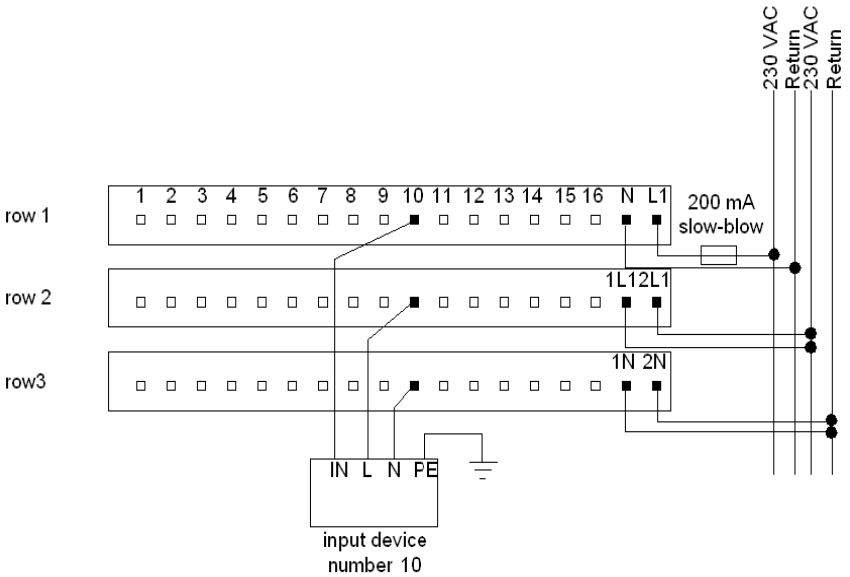

Simplified Schematics

The following diagram shows the field-side input circuitry.

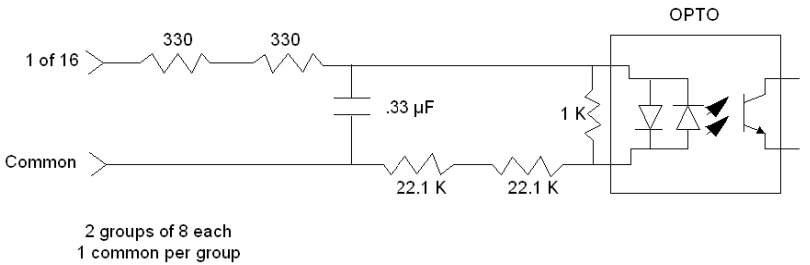

I/O Mapping

Overview

The 170 ADI 740 50 TSX Momentum I/O base supports 16 discrete inputs. This section contains information about the mapping of the I/O data into input words.

I/O Map

The I/O base may be mapped as one input word, or as 16 discrete input points.

IEC vs. Ladder Logic

In order to correctly field wire the inputs and map the input data, you need to know which type of Momentum Adapter is mounted on the base. Adapters may be either IEC compliant or 984 Ladder Logic compliant.

	IEC Compliant	**984 Ladder Logic Compliant**
Momentum Processor Adapters	All	None
Momentum Communication Adapters	All, except 170 NEF 110 21 170 NEF 160 21 170 FNT 110 00 170 FNT 110 01	170 NEF 110 21 170 NEF 160 21 170 FNT 110 00 170 FNT 110 01

Data Mapping

The figure below shows how data is mapped on the I/O base with an IEC Compliant adapter. When the I/O is mapped as discrete ponts (1x) the MSB is assigned to Pin 1 and the LSB is assigned to Pin 16. When the I/O is mapped as a word or register (3x), the MSB (bit 15) is assigned to Pin 16 and the LSB (bit 0) is assigned to Pin 1.

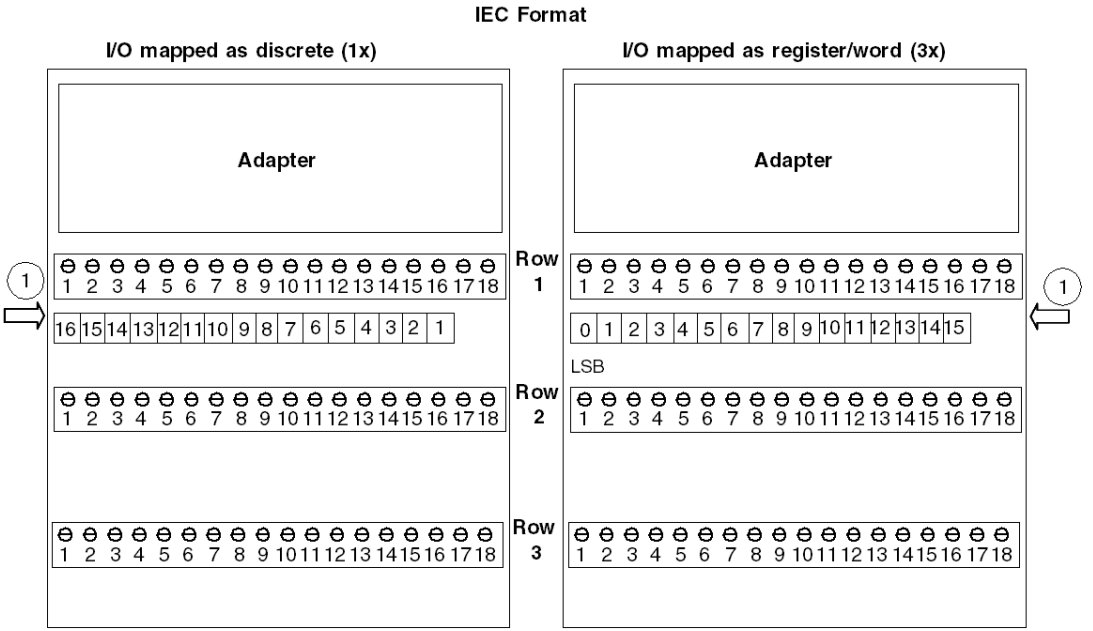

1 inputs

The figure below shows how data is mapped on the I/O base with a 984 Ladder Logic Compliant adapter. When the I/O is mapped as discrete points (1x) the MSB is assigned to Pin 16 and the LSB is assigned to Pin 1. When the I/O is mapped as a word or register (3x), the MSB (bit 15) is assigned to Pin 1 and the LSB (bit 0) is assigned to Pin 16.

984 Format

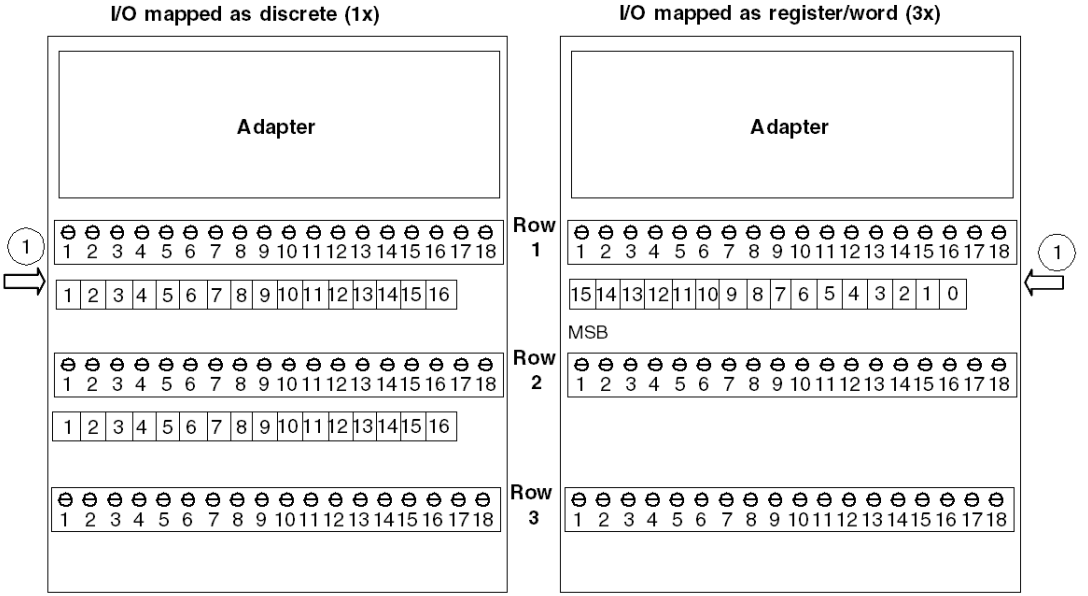

1 inputs

170 ADM 350 10 24 VDC - 16 Pt. In / 16 Pt. Out Module Base

15

Overview

This chapter describes the 170ADM 350 10 TSX Momentum I/O base.

See also 170 ADM 350 11 *(see page 243)* and 170 ADM 350 15 *(see page 261)*.

What's in this Chapter?

This chapter contains the following topics:

Topic	Page
Front Panel Components	226
Specifications	228
Internal Pin Connections	231
Field Wiring Guidelines	232
Wiring Diagrams	234
I/O Mapping	239

Front Panel Components

Overview

This section contains an illustration of the front panel of the 170 ADI 350 10 I/O base and a description of the LEDs.

Front Panel Illustration

The front panel of the I/O base is shown in the illustration below.

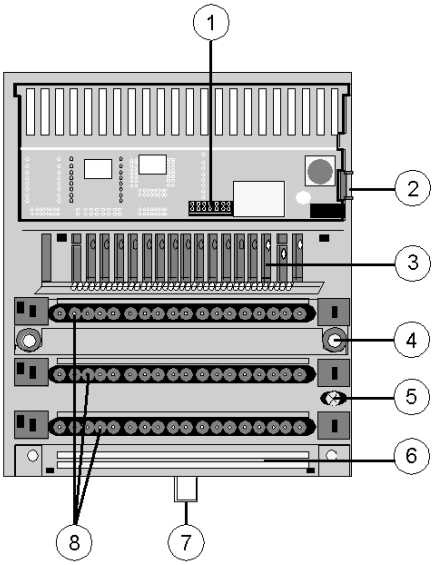

Components of the I/O module

Label	Description
1	Internal interface (ATI) connector
2	Locking and ground contact for the adapter
3	LED status display
4	Mounting holes for panel mount
5	Grounding screw
6	Busbar Mounting Slot
7	Locking tab for DIN rail mount
8	Sockets for the terminal connectors

LED Illustration

The LEDs are shown in the illustration below.

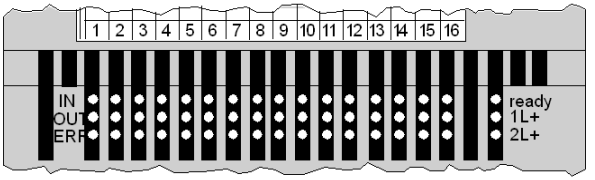

LED Descriptions

The LEDs are described in the table below.

Indicator	Condition	Message
Ready	Green	Module is ready to communicate. Operating voltage for internal logic (5 V) is present.
	Off	Module is not ready.
1L+	Green	Output voltage 1L+ for outputs 1 ... 8 (group 1) is present
	Off	Output voltage for outputs 1 ... 8 (group 1) is not present
2L+	Green	Output voltage 2L+ for outputs 9 ... 16 (group 2) is present
	Off	Output voltage for outputs 9 ... 16 (group 2) is not present
Upper row IN 1...16	Green	Input status (an LED per input); Input point active, ie. input carries a 1 signal (logically ON)
	Off	Input point inactive, ie. input carries a 0 signal (logically OFF)
Middle row OUT 1...16	Green	Output status (an LED per output); Output point active, ie. output carries a 1 signal (logically ON)
	Off	Output point inactive, ie. Output carries a 0 signal (logically OFF)
Lower row ERR 1...16	Red	Output overload (an LED per output). Short circuit or overload on the corresponding output.
	Off	Outputs 1 ... 16 operating normally.

Specifications

Overview

This section contains specifications for the 170 ADM 350 10 I/O base.

General Specifications

Module type	16 discrete inputs in 1 group 16 discrete outputs in 2 groups (8 pts/group)
Supply voltage	24 VDC
Supply voltage range	20...30 VDC
Supply current consumption	max. 250 mA at 24 VDC
Power dissipation	6 W + ((# of input points on x .144 W) + (# of output points on x .25 W))
I/O map	1 input word 1 output word

Isolation

Input to input	none
Output group to output group	none
Input to output group	none
Field to communication adapter	Defined by communication adapter type

Fuses

Internal	none
External: operating voltage	1 A slow-blow (Bussman GDC-1A or equivalent)
External: input voltage	According to the supply of the connected sensors– not to exceed 4A fast-blow
External: output voltage	According to the supply of the connected actuators– not to exceed 4 A fast-blow/ group

EMC

Immunity	IEC 1131-2 Surge on auxiliary power supply 2 kV
Emissions	EN 50081-2
Agency approvals	UL, CSA, CE, FM Class 1, Div. 2 pending

Physical Dimensions

Width	125 mm (4.9 in)
Depth (with no adapter)	40 mm (1.54 in)
Length	141.5 mm (5.5 in) no or one busbar 159.5mm (6.3in) two busbars 171.5 mm (6.75in) three busbars
Weight	200 g (0.44 lb)

Discrete Inputs

Number of points	16
Number of groups	1
Points per group	16
Signal type	True High
IEC 1131 type	1+ (See Appendix *IEC 1131 Input Types, page 673* for definitions of IEC input types.)
ON voltage	+11 ... +30 VDC
OFF voltage	-3 ... +5 VDC
Input current	10.0 mA minimum ON 2.0 mA maximum OFF
Input voltage range	-3 ... +30 VDC
Input resistance	4 kOhm
Response time	2.2 ms OFF to ON 3.3 ms ON to OFF

Discrete Outputs

Output type	Solid state switch
Output supply voltage	24 VDC
Output supply voltage range	20 ... 30 VDC
Output voltage	External supply - .5 VDC
Number of points	16
Number of groups	2
Points per group	8
Current capacity	0.5 A/point maximum 4 A/group 8 A/module
Signal type	True High

Leakage current (output out)	< 1 mA @ 24 VDC
Surge (inrush) current	5 A for 1 ms
On state voltage drop	< 0.5 VDC @ 0.5 A
Fault sensing (See Note Below)	Outputs are electronically safeguarded to assist in short circuit and overload protection
Fault reporting	1 red LED/point (row 3) ON when short current/ overload occurs
Error indication	Output overload for at least one out put (I/O-Error) to communication adapter
Response time (resistive load / 0.5 A)	< 0.1 ms OFF to ON < 0.1 ms ON to OFF
Maximum switching cycles	1000/h for 0.5 A inductive load 100/s for 0.5 A resistive load 8/s for 1.2 W Tungsten load

NOTE: Discrete 24 VDC outputs incorporate thermal shutdown and overload protection. The output current of a shortened output is limited to a nondestructive value. The short circuit heats the output driver and the output will switch off. The output will switch on again if the driver leaves the overtemperature condition. If the short circuit still exists, the driver will reach the overtemperature condition again and will switch off again.

Internal Pin Connections

Overview

This section contains an illustration showing the internal connections between terminals on the I/O base and an optional busbar.

Illustration

Rows 1 through 3 show the internal connections between terminals on the I/O base. Row 4 through 6 show the internal connections on the optional busbar.

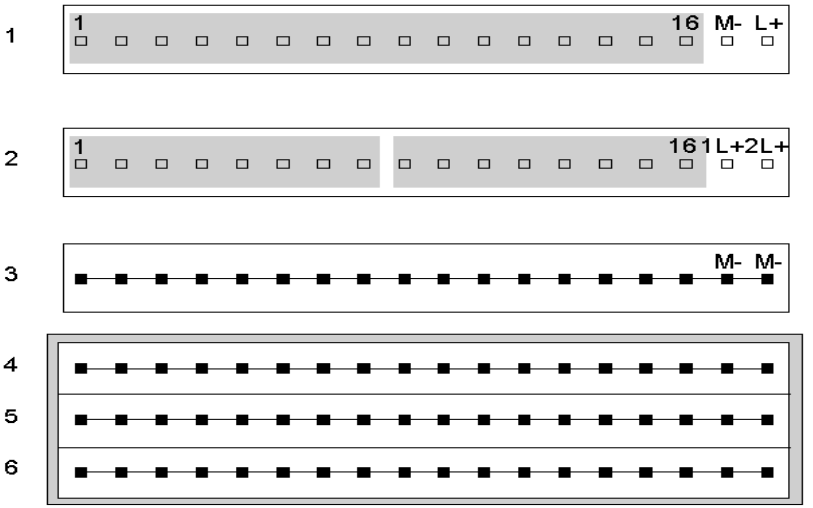

Field Wiring Guidelines

Overview

Inputs are field wired to row 1 of the base. The outputs are field wired to row 2. This section contains wiring guidelines and precautions.

Terminal Connector

To connect field devices to the I/O base, you need a field wiring terminal connector. Schneider Electric sells terminal connectors in sets of three.

Type	Part Number
Screw-in	170 XTS 001 00
Spring-clip	170 XTS 002 00

Busbar May Be Required

Depending on the type of field devices you are using, you may need a 1-, 2-, or 3-row busbar. The following busbars are available from Schneider Electric.

Type	Number of Rows	Part Number
Screw-in	1 - row	170 XTS 006 01
	2 - row	170 XTS 005 01
	3 - row	170 XTS 004 01
Spring-clip	1 - row	170 XTS 007 01
	2 - row	170 XTS 008 01
	3 - row	170 XTS 003 01

Mapping Terminal Blocks

⚠ CAUTION

POTENTIAL FOR SHORT CIRCUITS AND/OR POWER-UP SPIKES

Provide external fuses on the operating voltage to protect the module. Appropriate fuse values are shown in the wiring illustration. An unprotected module may be subject to short circuits and/or power-up spikes.

Failure to follow these instructions can result in injury or equipment damage.

The following table shows mapping terminal blocks and optional busbars.

Row	Terminal	Function
1	1...16	Inputs
	17	Return (M-)
	18	+ 24 VDC Operating voltage (L+)
2	1 ... 8	Outputs for group 1
	9 ... 16	Outputs for group 2
	17/18	+ 24 VDC for output group 1 (1L+) and group 2 (2L+)
3	1 ... 16	Return for outputs
	17/18	Return (M-)
4	1 ... 18	Input voltage for inputs I1 ... I16 or PE
5	1 ... 18	Return (M-)
6	1 ... 18	Protective earth (PE)

Protective Circuit May Be Required

When contacted switches are used on the input lines or when lines to the peripherals are very long, the outputs of inductive loads require protective circuitry with a clamping/suppressor diode. Install the protective circuit prallel to the operating coil.

Wiring Diagrams

Overview

This section provides diagrams to assist you in wiring the following types of devices:

- 2-wire devices
- sensors activated by an output
- 4-wire sensors with a 2-wire actuator
- broken wire detection

2-Wire Devices

The diagram below shows an example of wiring for two-wire devices. Separate connections to pins 17 and 18 are shown on row 3, even though these two pins are internally connected. This is done to halve the load.

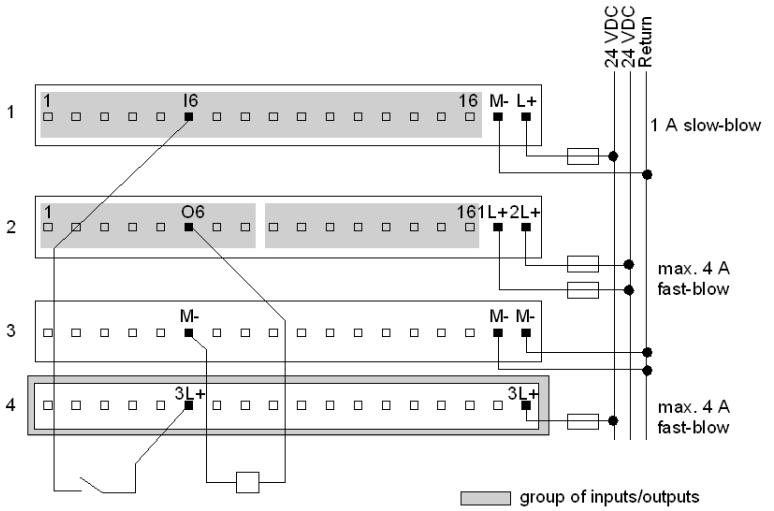

Sensor Activated by Output

The wiring diagram below shows an example of a sensor activated by an output. The diagram shows the sensors being supplied with voltage only when the outputs on pins 6 and 14, row 2, are high. The inputs from pins 6 and 14, row 1, can be high only when one of the associated outputs is high.

Separate connections to pins 17 and 18 are shown on row 3, even though these two pins are internally connected. This is done to halve the load.

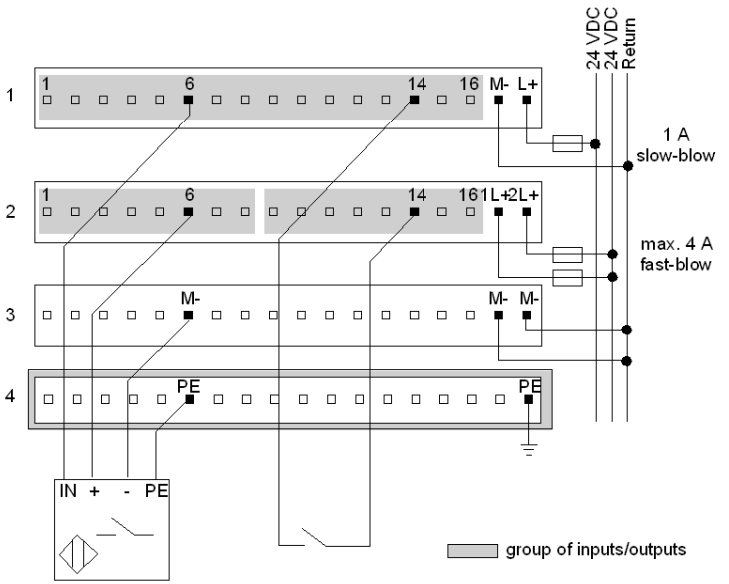

Four-Wire Sensor with a Two-Wire Actuator

The diagram below shows a four-wire sensor with a two-wire actuator. The process of wiring a 3-wire sensor is very similar to the one below. Because 3-wire sensors do not require PE, a 2-row busbar could be used instead of the 3-row busbar shown.

Separate connections to pins 17 and 18 are shown on row 3, even though these two pins are internally connected. This is done to halve the load.

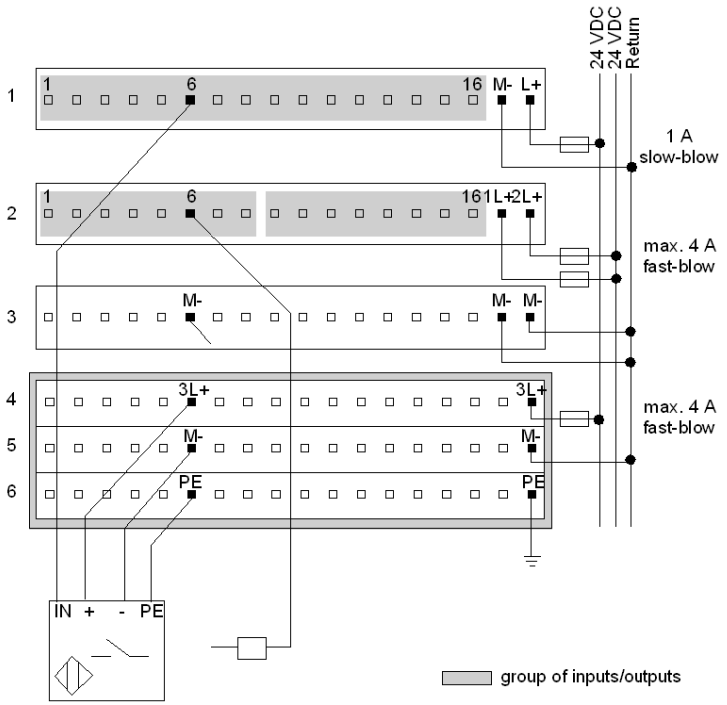

Broken Wire Detection

The diagram below shows a three-wire actuator with an optional wiring scheme for broken wire detection. The dotted line reads back whether or not current has reached the actuator. When the output on pin 6, row 2, is high, the input from pin 6, row 1, must also be high.

Separate connections to pins 17 and 18 are shown on row 3, even though these two pins are internally connected. This is done to halve the load.

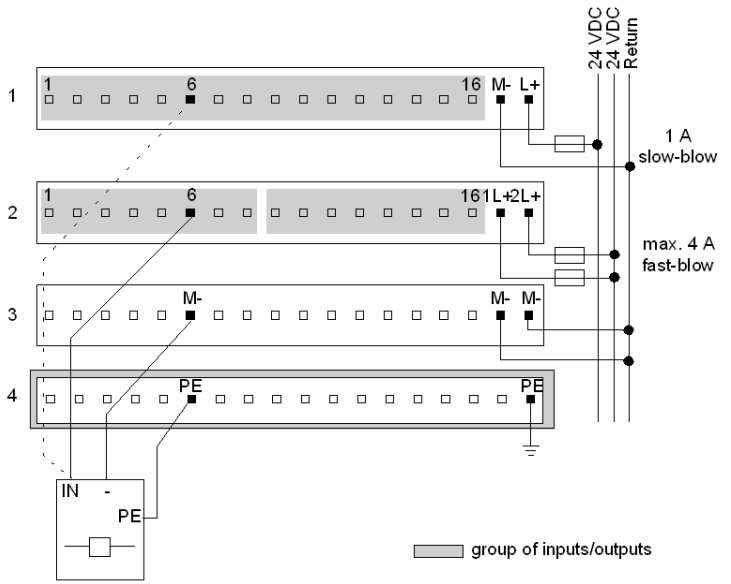

Simplified Input Schematics

The following diagram shows the field-side input circuitry.

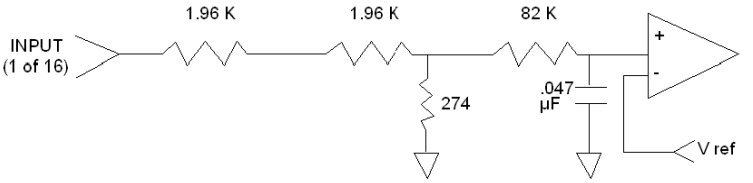

Simplified Output Schematics

The following diagram shows the field-side output circuitry.

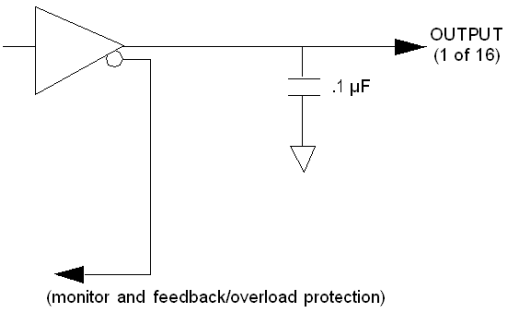

I/O Mapping

Overview

The 170 ADM 350 10 TSX Momentum I/O base supports 16 discrete inputs and 16 discrete outputs. This section contains information about the mapping of the I/O data into input words and output words.

I/O Map

The I/O base may be mapped as one input word and as one output word, or as 16 discrete input points and as 16 discrete output points.

IEC vs. Ladder Logic

In order to correctly field wire the inputs/outputs and map the input/outputs data, you need to know which type of Momentum Adapter is mounted on the base. Adapters may be either IEC compliant or 984 Ladder Logic compliant.

	IEC Compliant	**984 Ladder Logic Compliant**
Momentum Processor Adapters	All	None
Momentum Communication Adapters	All, except 170 NEF 110 21 170 NEF 160 21 170 FNT 110 00 170 FNT 110 01	170 NEF 110 21 170 NEF 160 21 170 FNT 110 00 170 FNT 110 01

Data Mapping

The figure below shows how data is mapped on the I/O base with an IEC Compliant adapter. When the I/O is mapped as discrete points (1x/0x), the MSB is assigned to Pin 1 and the LSB is assigned to Pin 16. When the I/O is mapped as a word or register (3x/4x), the MSB (bit 15) is assigned to Pin 16 and the LSB (bit 0) is assigned to Pin 1.

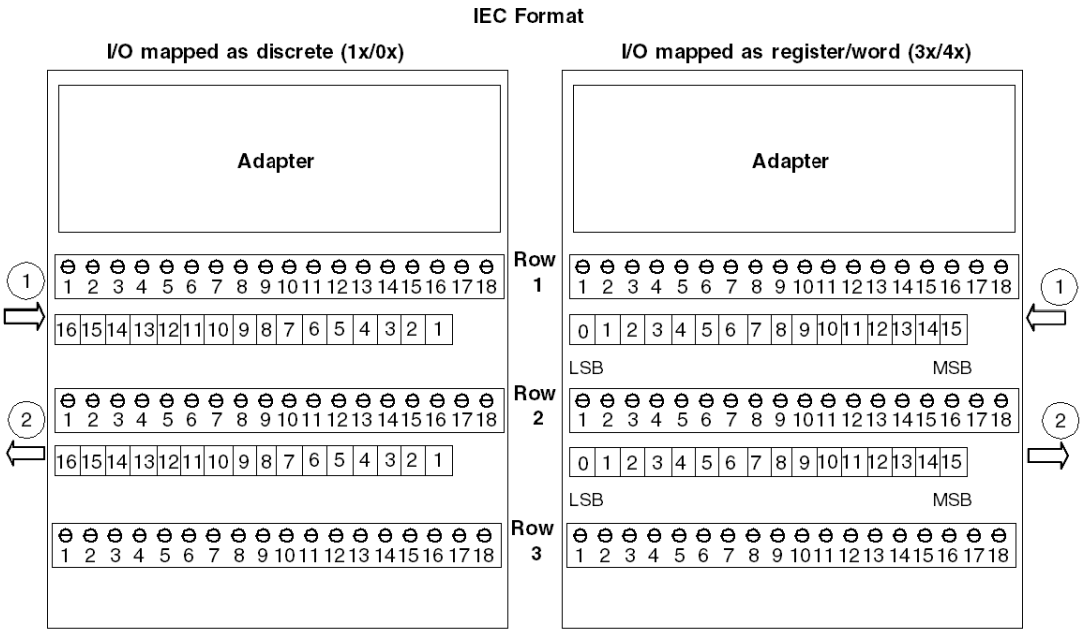

1 inputs
2 outputs

The figure below shows how data is mapped on the I/O base with a 984 Ladder Logic Compliant adapter. When the I/O is mapped as discrete points (1x/0x), the MSB is assigned to Pin 16 and the LSB is assigned to Pin 1. When the I/O is mapped as a word or register (3x/4x), the MSB (bit 15) is assigned to Pin 1 and the LSB (bit 0) is assigned to Pin 16

984 Format

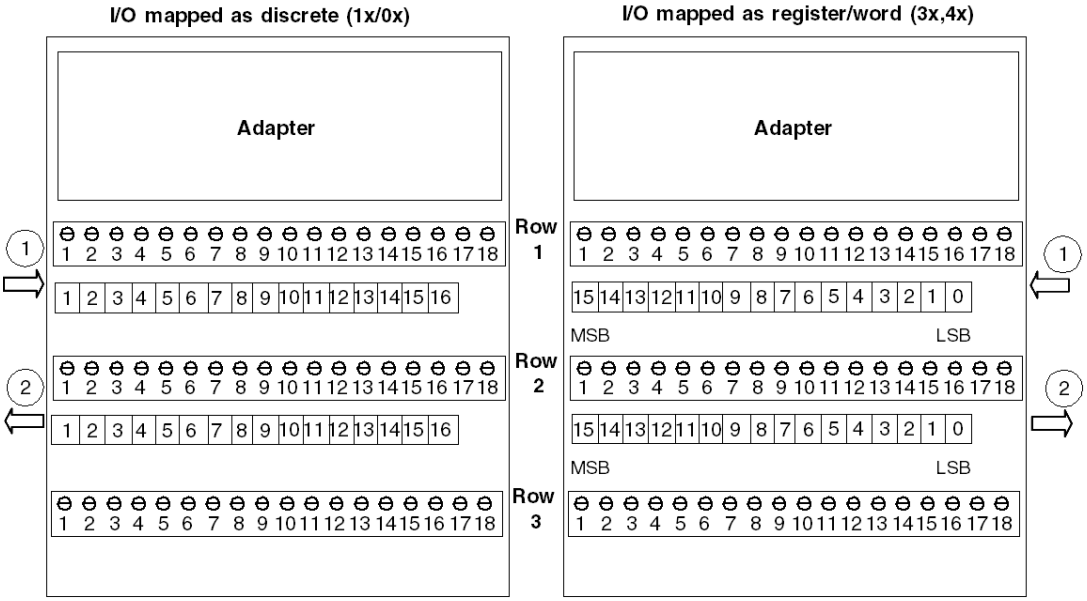

1 inputs
2 outputs

170 ADM 350 11 24 VDC - 16 Pt. In / 16 Pt. Out Module Base

16

Overview

This chapter describes the 170 ADM 350 11 TSX Momentum I/O base.

What's in this Chapter?

This chapter contains the following topics:

Topic	Page
Front Panel Components	244
Specifications	246
Internal Pin Connections	249
Field Wiring Guidelines	250
Wiring Diagrams	252
I/O Mapping	257

Front Panel Components

Overview

This section contains an illustration of the front panel of the 170 ADI 350 11 I/O base and a description of the LEDs.

Front Panel Illustration

The front panel of the I/O base is shown in the illustration below.

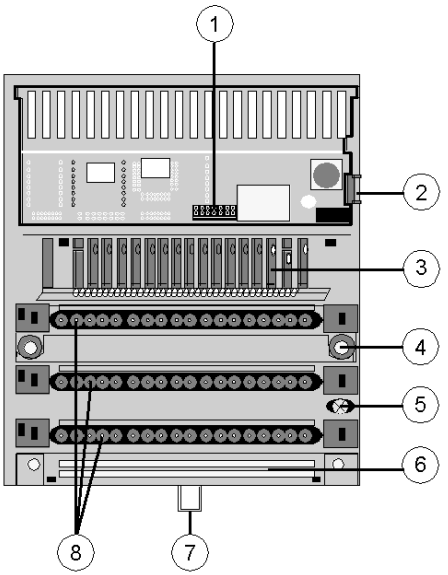

Components of the I/O module

Label	Description
1	Internal interface (ATI) connector
2	Locking and ground contact for the adapter
3	LED status display
4	Mounting holes for panel mount
5	Grounding screw
6	Busbar Mounting Slot
7	Locking tab for DIN rail mount
8	Sockets for the terminal connectors

LED Illustration

This I/O base has one LED, the ready indicator shown in the illustration below.

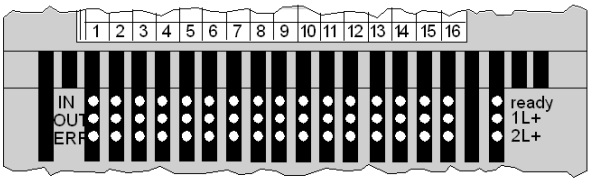

LED Descriptions

The ready indicator is described in the table below.

Indicator	Condition	Message
Ready	Green	Module is ready to communicate. Operating voltage for internal logic (5 V) is present.
	Off	Module is not ready.
1L+	Green	Output voltage 1L+ of inputs 1 ... 8 (group 1) is present
	Off	Output voltage of inputs 1 ... 8 (group 1) is not present
2L+	Green	Output voltage 2L+ of inputs 9 ... 16 (group 2) is present
	Off	Output voltage of inputs 9 ... 16 (group 2) is not present
Upper row IN 1...16	Green	Input status (an LED per input); Input point active, ie. input carries a 1 signal (logically ON)
	Off	Input point inactive, ie. input carries a 0 signal (logically OFF)
Middle row OUT 1...16	Green	Output status (an LED per output); Output point active, ie. output carries a 1 signal (logically ON)
	Off	Output point inactive, ie. Output carries a 0 signal (logically OFF)
Lower row ERR 1...16	Red	Output overload (an LED per output). Short circuit or overload on the corresponding output.
	Off	Outputs 1 ... 16 operating normally.

Specifications

Overview

This section contains specifications for the 170 ADM 350 11 I/O base.

General Specifications

Module type	16 discrete inputs in 1 group 16 discrete outputs in 2 groups (8 pts/group)
Supply voltage	24 VDC
Supply voltage range	20...30 VDC
Supply current consumption	max. 250 mA at 24 VDC
Power dissipation	6 W + ((# of input points on x .144 W) + (# of output points on x .25 W))
I/O map	1 input word 1 output word

Isolation

Input to input	none
Output group to output group	none
Input to output group	none
Field to communication adapter	Defined by Communication Adapter type

Fuses

Internal	none
External: operating voltage	1 A slow-blow (Bussmann GDC-1A or equivalent)
External: input voltage	According to the supply of the connected sensors– not to exceed 4A fast-blow
External: output voltage	According to the supply of the connected actuators– not to exceed 4 A fast-blow/ group

EMC

Immunity	IEC 1131-2 Surge on auxiliary power supply 500V
Emissions	EN 50081-2
Agency approvals	UL, CSA, CE, FM Class 1, Div. 2 pending

Physical Dimensions

Width	125 mm (4.9 in)
Depth (with no adapter)	40 mm (1.54 in)
Length	141.5 mm (5.5 in) no or one busbar 159.5mm (6.3in) two busbars 171.5 mm (6.75in) three busbars
Weight	200 g (0.44 lb)

Discrete Inputs

Number of points	16
Number of groups	1
Points per group	16
Signal type	True High
IEC 1131 type	1+ (See Appendix *IEC 1131 Input Types, page 673* for definitions of IEC input types.)
ON voltage	+11 ... +30 VDC
OFF voltage	-3 ... +5 VDC
Input current	2.5 mA minimum ON (6 mA at 24 VDC) 1.2 mA maximum OFF
Input voltage range	-3 ... +30 VDC
Input resistance	4 kOhm
Response time	60 microsec OFF to ON 80 microsec ON to OFF

Discrete Outputs

Output type	Solid state switch
Output supply voltage	24 VDC
Output supply voltage range	20 ... 30 VDC
Output voltage	External supply - .5 VDC
Number of points	16
Number of groups	2
Points per group	8
Current capacity	0.5 A/point maximum 4 A/group 8 A/module
Signal type	True High

Leakage current (output out)	< 1 mA @ 24 VDC
Surge (inrush) current	5 A for 1 ms
On state voltage drop	< 0.5 VDC @ 0.5 A
Fault sensing (See Note Below)	Outputs are electronically safeguarded to assist in short circuit and overload protection
Fault reporting	1 red LED/point (row 3) ON when short current/ overload occurs
Error indication	Output overload for at least one out put (I/O-Error) to communication adapter
Response time (resistive load / 0.5 A)	< 0.1 ms OFF to ON < 0.1 ms ON to OFF
Maximum switching cycles	1000/h for 0.5 A inductive load 100/s for 0.5 A resistive load 8/s for 1.2 W Tungsten load

NOTE: Discrete 24 VDC outputs incorporate thermal shutdown and overload protection. The output current of a shortened output is limited to a nondestructive value. The short circuit heats the output driver and the output will switch off. The output will switch on again if the driver leaves the overtemperature condition. If the short circuit still exists, the driver will reach the overtemperature condition again and will switch off again.

Internal Pin Connections

Overview

This section contains an illustration showing the internal connections between terminals on the I/O base and an optional busbar.

Illustration

Rows 1 through 3 show the internal connections between terminals on the I/O base. Row 4 through 6 show the internal connections on the optional busbar.

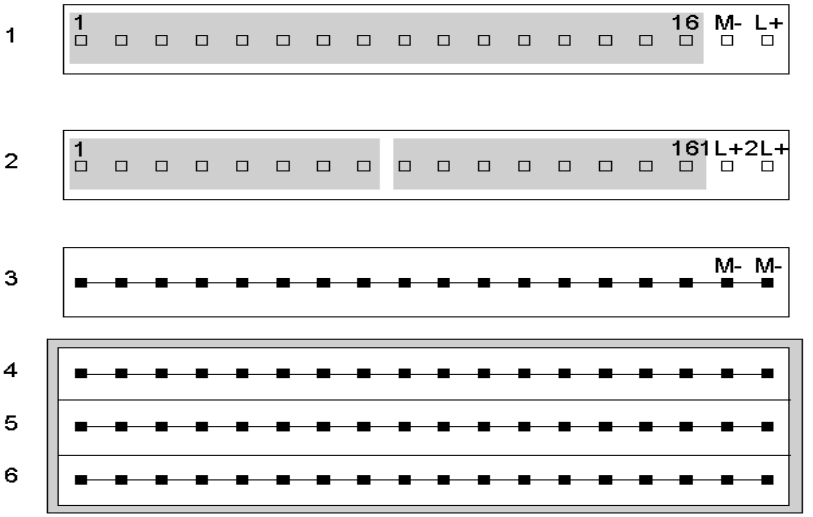

Field Wiring Guidelines

Overview

Inputs are field wired to row 1 of the base. The outputs are field wired to row 2. This section contains wiring guidelines and precautions.

Terminal Connector

To connect field devices to the I/O base, you need a field wiring terminal connector. Schneider Electric sells terminal connectors in sets of three.

Type	Part Number
Screw-in	170 XTS 001 00
Spring-clip	170 XTS 002 00

Busbar May Be Required

Depending on the type of field devices you are using, you may need a 1-, 2-, or 3-row busbar. The following busbars are available from Schneider Electric.

Type	Number of Rows	Part Number
Screw-in	1 - row	170 XTS 006 01
	2 - row	170 XTS 005 01
	3 - row	170 XTS 004 01
Spring-clip	1 - row	170 XTS 007 01
	2 - row	170 XTS 008 01
	3 - row	170 XTS 003 01

Mapping Terminal Blocks

⚠ CAUTION

POTENTIAL FOR SHORT CIRCUITS AND/OR POWER-UP SPIKES

Provide external fuses on the operating voltage to protect the module. Appropriate fuse values are shown in the wiring illustration. An unprotected module may be subject to short circuits and/or power-up spikes.

Failure to follow these instructions can result in injury or equipment damage.

The following table shows mapping terminal blocks and optional busbars.

Row	Terminal	Function
1	1...16	Inputs
	17	Return (M-)
	18	+ 24 VDC Operating voltage (L+)
2	1 ... 8	Outputs for group 1
	9 ... 16	Outputs for group 2
	17/18	+ 24 VDC for output group 1 (1L+) and group 2 (2L+)
3	1 ... 16	Return for outputs
	17/18	Return (M-)
4	1 ... 18	Input voltage for inputs I1 ... I16 or PE
5	1 ... 18	Return (M-)
6	1 ... 18	Protective earth (PE)

Protective Circuit May Be Required

When contacted switches are used on the input lines or when lines to the peripherals are very long, the outputs of inductive loads require protective circuitry with a clamping/suppressor diode. Install the protective circuit prallel to the operating coil.

Wiring Diagrams

Overview

This section provides diagrams to assist you in wiring the following types of devices:

- 2-wire devices
- sensors activated by an output
- 4-wire sensors with a 2-wire actuator
- broken wire detection

2-Wire Devices

The diagram below shows an example of wiring for two-wire devices. Separate connections to pins 17 and 18 are shown on row 3, even though these two pins are internally connected. This is done to halve the load.

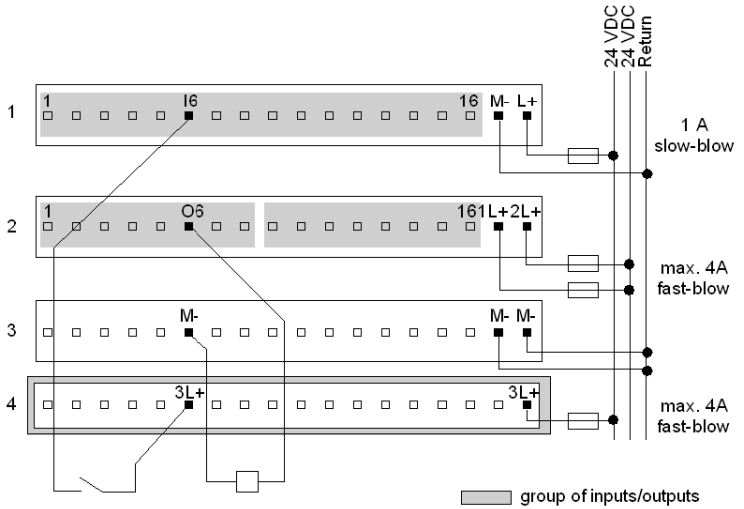

Sensor Activated by Output

The wiring diagram below shows an example of a sensor activated by an output. The diagram shows the sensors being supplied with voltage only when the outputs on pins 6 and 14, row 2, are high. The inputs from pins 6 and 14, row 1, can be high only when one of the associated outputs is high.

Separate connections to pins 17 and 18 are shown on row 3, even though these two pins are internally connected. This is done to halve the load.

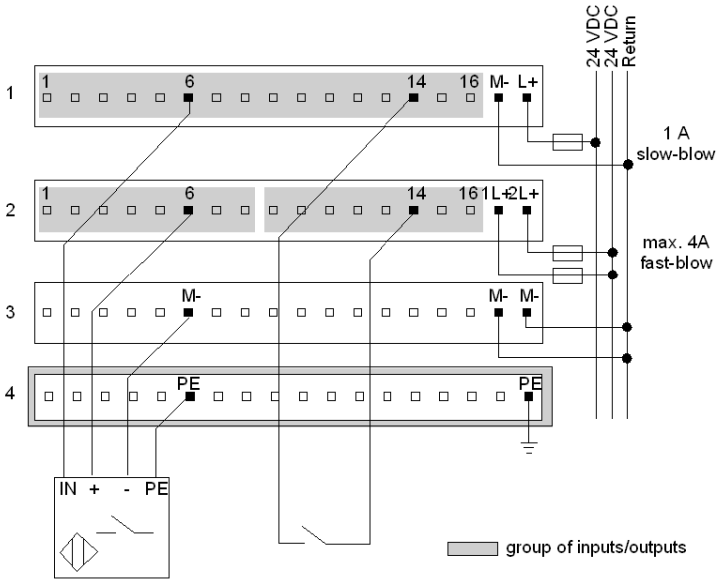

Four-Wire Sensor with a Two-Wire Actuator

The diagram below shows a four-wire sensor with a two-wire actuator. The process of wiring a 3-wire sensor is very similar to the one below. Because 3-wire sensors do not require PE, a 2-row busbar could be used instead of the 3-row busbar shown.

Separate connections to pins 17 and 18 are shown on row 3, even though these two pins are internally connected. This is done to halve the load.

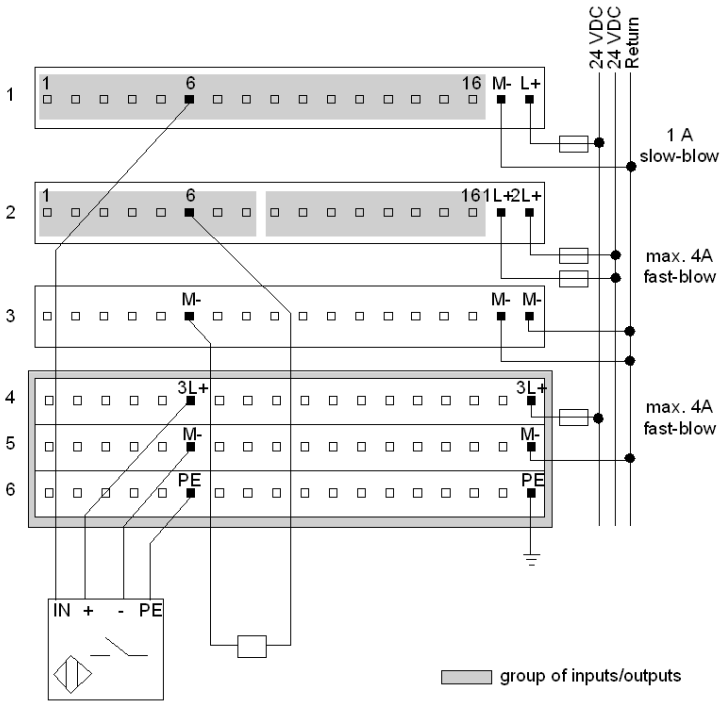

Broken Wire Detection

The diagram below shows a three-wire actuator with an optional wiring scheme for broken wire detection. The dotted line reads back whether or not current has reached the actuator. When the output on pin 6, row 2, is high, the input from pin 6, row 1, must also be high.

Separate connections to pins 17 and 18 are shown on row 3, even though these two pins are internally connected. This is done to halve the load.

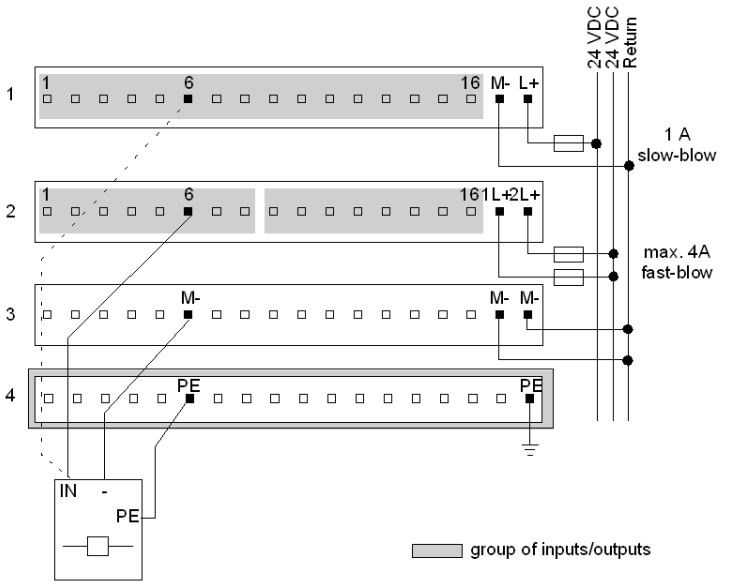

Simplified Input Schematics

The following diagram shows the field-side input circuitry.

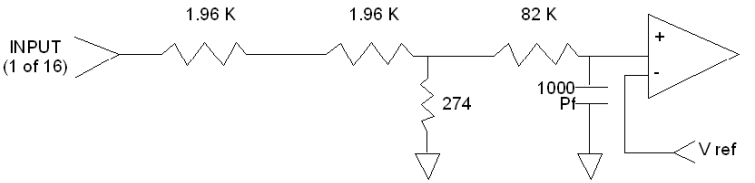

Simplified Output Schematics

The following diagram shows the field-side output circuitry.

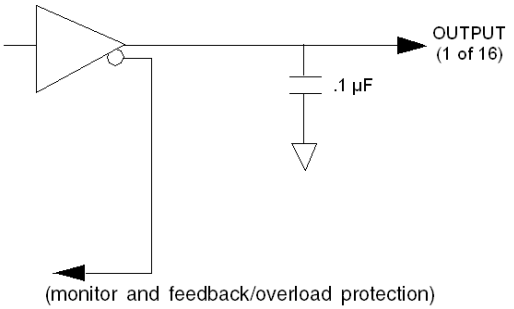

I/O Mapping

Overview

The 170 ADM 350 11 TSX Momentum I/O base supports 16 discrete inputs and 16 discrete outputs. This section contains information about the mapping of the I/O data into input words and output words.

I/O Map

The I/O base may be mapped as one input word and one output word, or as 16 discrete input points and 16 discrete output points.

IEC vs. Ladder Logic

In order to correctly field wire the inputs/outputs and map the input/output data, you need to know which type of Momentum Adapter is mounted on the base.

Adapters may be either IEC compliant or 984 Ladder Logic compliant.

	IEC Compliant	**984 Ladder Logic Compliant**
Momentum Processor Adapters	All	None
Momentum Communication Adapters	All, except 170 NEF 110 21 170 NEF 160 21 170 FNT 110 00 170 FNT 110 01	170 NEF 110 21 170 NEF 160 21 170 FNT 110 00 170 FNT 110 01

Data Mapping

The figure below shows how data is mapped on the I/O base with an IEC Compliant adapter. When the I/O is mapped as discrete points (1x/0x), the MSB is assigned to Pin 1 and the LSB is assigned to Pin 16. When the I/O is mapped as a word or register (3x/4x), the MSB (bit 15) is assigned to Pin 16 and the LSB (bit 0) is assigned to Pin 1.

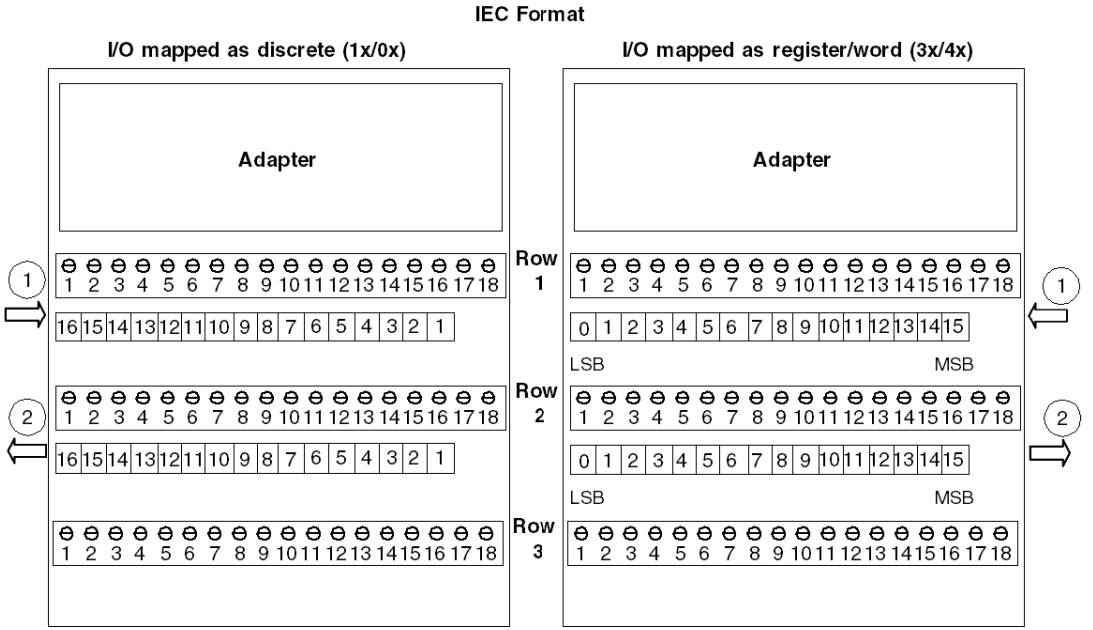

1 inputs
2 outputs

The figure below shows how data is mapped on the I/O base with a Ladder Logic Compliant adapter. When the I/O is mapped as discrete points (1x/0x), the MSB is assigned to Pin 16 and the LSB is assigned to Pin 1. When the I/O is mapped as a word or register (3x/4x), the MSB (bit 15) is assigned to Pin 1 and the LSB (bit 0) is assigned to Pin 16.

984 Format

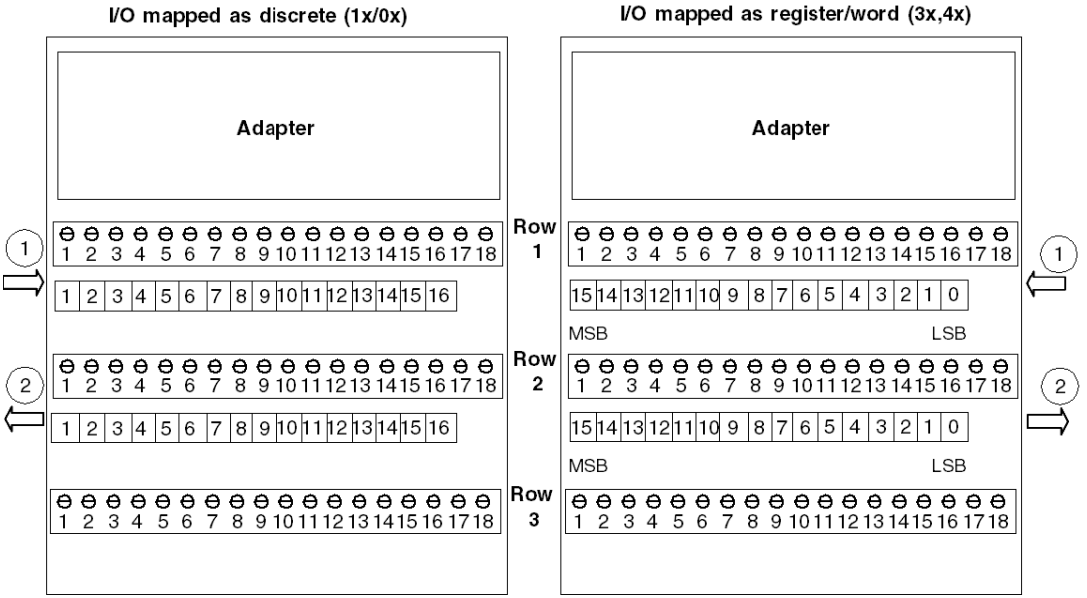

1 inputs
2 outputs

170 ADM 350 15 24 VDC - 16 Pt. In / 16 Pt. Out Module Base

17

Overview

This chapter describes the 170 ADM 350 15 TSX Momentum I/O base.

What's in this Chapter?

This chapter contains the following topics:

Topic	Page
Front Panel Components	262
Specifications	264
Internal Pin Connections	267
Field Wiring Guidelines	268
Wiring Diagrams	270
I/O Mapping	271

Front Panel Components

Overview

This section contains an illustration of the front panel of the 170 ADI 350 15 I/O base and a description of the LEDs.

Front Panel Illustration

The front panel of the I/O base is shown in the illustration below.

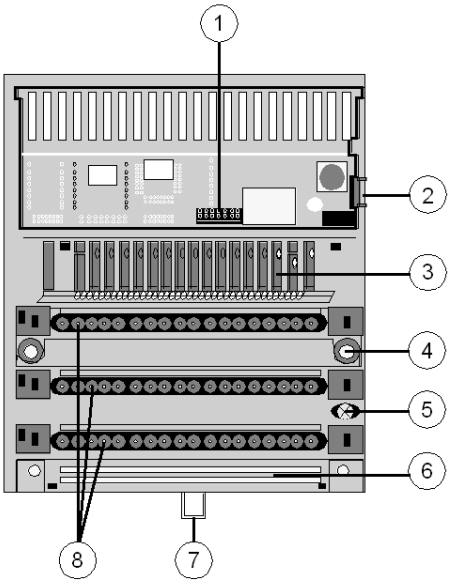

Components of the I/O module

Label	Description
1	Internal interface (ATI) connector
2	Locking and ground contact for the adapter
3	LED status display
4	Mounting holes for panel mount
5	Grounding screw
6	Busbar Mounting Slot
7	Locking tab for DIN rail mount
8	Sockets for the terminal connectors

LED Illustration

This I/O base has one LED, the ready indicator shown in the illustration below.

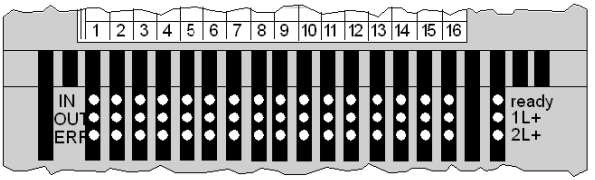

LED Descriptions

The ready indicator is described in the table below.

Indicator	Condition	Message
Ready	Green	Module is ready to communicate. Operating voltage for internal logic (5 V) is present.
	Off	Module is not ready.
1L+	Green	Output voltage 1L+ of inputs 1 ... 8 (group 1) is present
	Off	Output voltage of inputs 1 ... 8 (group 1) is not present
2L+	Green	Output voltage 2L+ of inputs 9 ... 16 (group 2) is present
	Off	Output voltage of inputs 9 ... 16 (group 2) is not present
Upper row IN 1...16	Green	Input status (an LED per input); Input point active, ie. input carries a 1 signal (logically ON)
	Off	Input point inactive, ie. input carries a 0 signal (logically OFF)
Middle row OUT 1...16	Green	Output status (an LED per output); Output point active, ie. output carries a 1 signal (logically ON)
	Off	Output point inactive, ie. Output carries a 0 signal (logically OFF)
Lower row ERR 1...16	Red	Output overload (an LED per output). Short circuit or overload on the corresponding output.
	Off	Outputs 1 ... 16 operating normally.

Specifications

Overview

This section contains specifications for the 170 ADM 350 15 I/O base.

NOTE: In order for the 170 ADM 350 15 module to comply with the Directives 73/23/EEC (LV) and 89/336/EEC (EMC) and the IEC standards, EN 61131-2:2003 and EN 55011, the module must be used with a Telemecanique power supply, model numbers ABL7 RE2403, ABL RE2405, or ABL RE2410.

General Specifications

Module type	16 discrete inputs in 1 group 16 discrete outputs in 2 groups (8 pts/group)
Supply voltage	24 VDC
Supply voltage range	20-30 VDC
Supply current consumption	max. 250 mA at 24 VDC
Power dissipation	6 W + ((# of input points on x .144 W) + (# of output points on x .25 W))
I/O map	1 input word 1 output word

Isolation

Input to input	none
Output to output	none
Input to output group	500 VAC for 1 minute
I/O Points to Communication Interface	500 VAC for 1 minute
Module power to logic	none
Module power to I/O points	500 VAC for 1 minute

Fuses

Internal	none
External: module power	1 A slow-blow (Bussmann GDC-1A or equivalent)
External: input power	1 A slow-blow (Bussmann GDC-1A or equivalent)
External: output power	According to the supply of the connected actuators– not to exceed 6.3 A fast-blow/ group

EMC

Immunity	IEC 1131-2 Surge on auxiliary power supply 500V
Emissions	EN 50081-2
Agency approvals	UL, CSA, CE, FM Class 1, Div. 2 pending

Physical Dimensions

Width	125 mm (4.9 in)
Depth (with no adapter)	40 mm (1.54 in)
Length	141.5 mm (5.5 in) no or one busbar 159.5mm (6.3in) two busbars 171.5 mm (6.75in) three busbars
Weight	200 g (0.44 lb)

Discrete Inputs

Number of points	16
Number of groups	1
Points per group	16
Signal type	True Low
IEC 1131 type	1 (See Appendix *IEC 1131 Input Types, page 673* for definitions of IEC input types.)
ON voltage	0 ... 5 VDC
OFF voltage	15 ... 30 VDC
Input current	2.0 mA minimum ON 0.5 mA maximum OFF
Input voltage range	0 ... +30 VDC
Input resistance	4 kOhm
Response time	2.2 ms OFF to ON 3.3 ms ON to OFF

Discrete Outputs

Output type	Solid state switch (sinking)
Output supply voltage	24 VDC
Output supply voltage range	20-30 VDC
Number of points	16
Number of groups	1
Current capacity	0.5 A/point maximum 5 A/module
Signal type	True Low
Leakage current (output out)	< 1 mA @ 24 VDC
Surge (inrush) current	1 A for 1 ms Current limited
On state voltage drop	< 0.5 VDC @ 0.5 A
Fault sensing (See Note Below)	Outputs are electronically safeguarded to assist in short circuit and overload protection
Fault indication	1 red LED/point (row 3) ON when short current/ overload occurs
Error reporting	none
Response time (resistive load / 0.5 A)	< 1 ms OFF to ON < 1 ms ON to OFF
Maximum switching cycles	1000/h for 0.5 A inductive load 100/s for 0.5 A resistive load 8/s for 1.2 W Tungsten load
Loads	
Inductive	500 mH @ 0.5 Hz
Capacitance	50 microfarads
Tungsten Load	12 W
Input Voltage Surge	45 Volt for 10 ms 56 Volt for 1.3 mS decaying pulse

NOTE: Discrete 24 VDC outputs incorporate thermal shutdown and overload protection. The output current of a shortened output is limited to a nondestructive value. The short circuit heats the output driver and the output will switch off. The output will switch on again if the driver leaves the over temperature condition. If the short circuit still exists, the driver will reach the over temperature condition again and will switch off again.

Internal Pin Connections

Overview

This section contains an illustration showing the internal connections between terminals on the I/O base and an optional busbar.

Illustration

Rows 1 through 3 show the internal connections between terminals on the I/O base. Row 4 through 6 show the internal connections on the optional busbar.

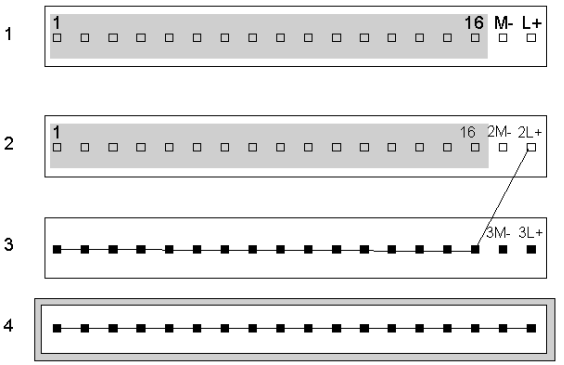

Field Wiring Guidelines

Overview

Inputs are field wired to row 1 of the base. The outputs are field wired to row 2. This section contains wiring guidelines and precautions.

Terminal Connector

To connect field devices to the I/O base, you need a field wiring terminal connector. Schneider Electric sells terminal connectors in sets of three.

Type	Part Number
Screw-in	170 XTS 001 00
Spring-clip	170 XTS 002 00

Busbar May Be Required

Depending on the type of field devices you are using, you may need a 1-, 2-, or 3-row busbar. The following busbars are available from Schneider Electric.

Type	Number of Rows	Part Number
Screw-in	1 - row	170 XTS 006 01
	2 - row	170 XTS 005 01
	3 - row	170 XTS 004 01
Spring-clip	1 - row	170 XTS 007 01
	2 - row	170 XTS 008 01
	3 - row	170 XTS 003 01

Mapping Terminal Blocks

⚠ CAUTION

POTENTIAL FOR SHORT CIRCUITS AND/OR POWER-UP SPIKES

Provide external fuses on the operating voltage to protect the module. Appropriate fuse values are shown in the wiring illustration. An unprotected module may be subject to short circuits and/or power-up spikes.

Failure to follow these instructions can result in injury or equipment damage.

The following table shows mapping terminal blocks and optional busbars.

Row	Terminal	Function
1	1...16	Inputs
	17	Return Inputs
	18	+ 24 VDC Power inputs
2	1 ... 16	Outputs
	17	Return for outputs
	18	+ 24 VDC Power for outputs
3	1 ... 16	+ 24 VDC Power for outputs (2L+)
	17	Return Module power
	18	+ 24 VDC Power
4	1 ... 18	Return (M-)

Protective Circuit May Be Required

When contacted switches are used on the input lines or when lines to the peripherals are very long, the outputs of inductive loads require protective circuitry with a clamping/suppressor diode. Install the protective circuit prallel to the operating coil.

Wiring Diagrams

Overview

This section provides a diagram to assist you in wiring 2-wire devices.

2-Wire Devices

The diagram below shows an example of wiring for two-wire devices.

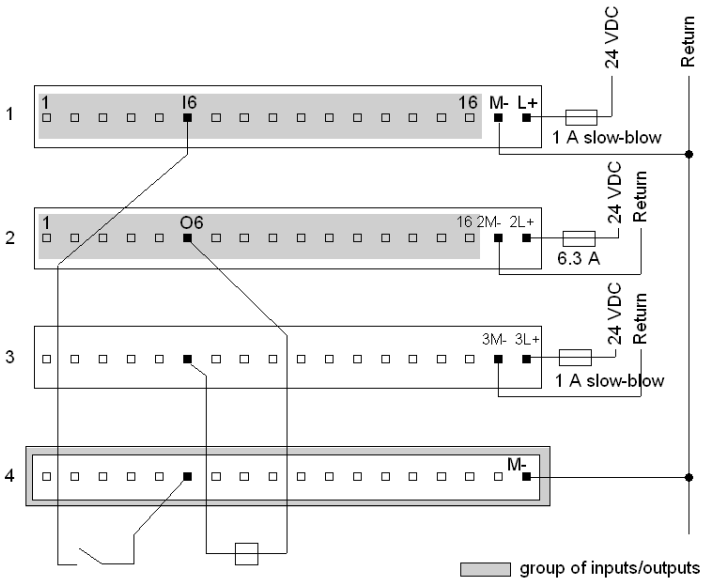

I/O Mapping

Overview

The 170 ADM 350 15 TSX Momentum I/O base supports 16 discrete inputs and 16 discrete outputs. This section contains information about the mapping of the I/O data into input words and output words.

I/O Map

The I/O base may be mapped as one input word, and one input word, or as 16 discrete input points and 16 discrete output points.

IEC vs. Ladder Logic

In order to correctly field wire the inputs/outputs and map the input/output data, you need to know which type of Momentum Adapter is mounted on the base.

Adapters may be either IEC compliant or 984 Ladder Logic compliant.

	IEC Compliant	**984 Ladder Logic Compliant**
Momentum Processor Adapters	All	None
Momentum Communication Adapters	All, except 170 NEF 110 21 170 NEF 160 21 170 FNT 110 00 170 FNT 110 01	170 NEF 110 21 170 NEF 160 21 170 FNT 110 00 170 FNT 110 01

Data Mapping

The figure below shows how data is mapped on the I/O base with an IEC Compliant adapter. When the I/O is mapped as discrete points (1x/0x), the MSB is assigned to Pin 1 and the LSB is assigned to Pin 16. When the I/O is mapped as a word or register (3x/4x), the MSB (bit 15) is assigned to Pin 16 and the LSB (bit 0) is assigned to Pin 1.

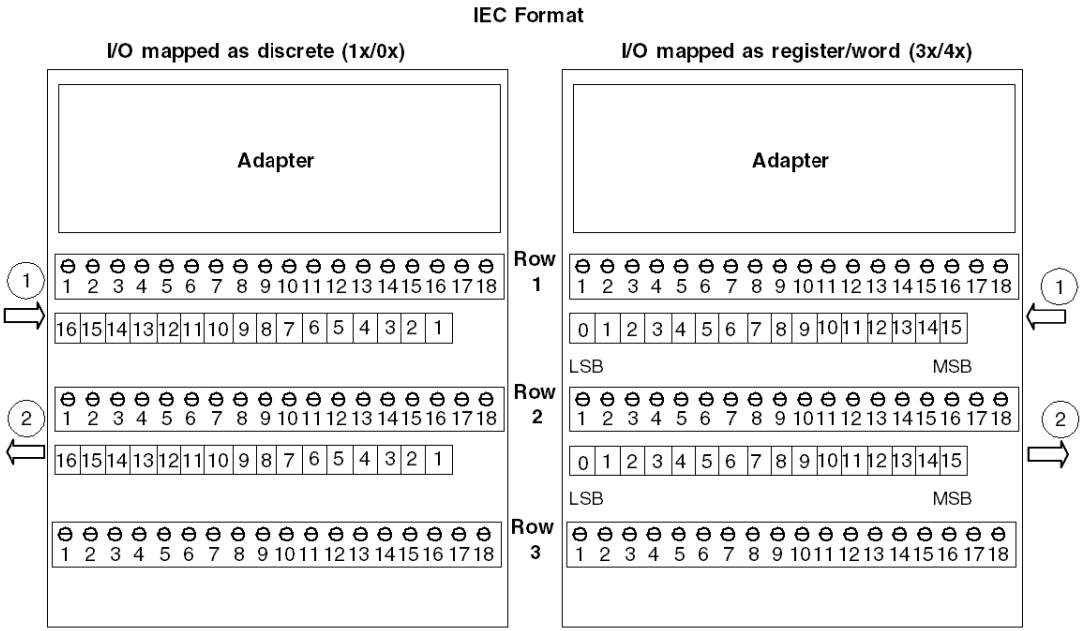

1 inputs
2 outputs

The figure below shows how data is mapped on the I/O base with a Ladder Logic Compliant adapter. When the I/O is mapped as discrete points (1x/0x), the MSB is assigned to Pin 16 and the LSB is assigned to Pin 1. When the I/O is mapped as a word or register (3x/4x), the MSB (bit 15) is assigned to Pin 1 and the LSB (bit 0) is assigned to Pin 16.

984 Format

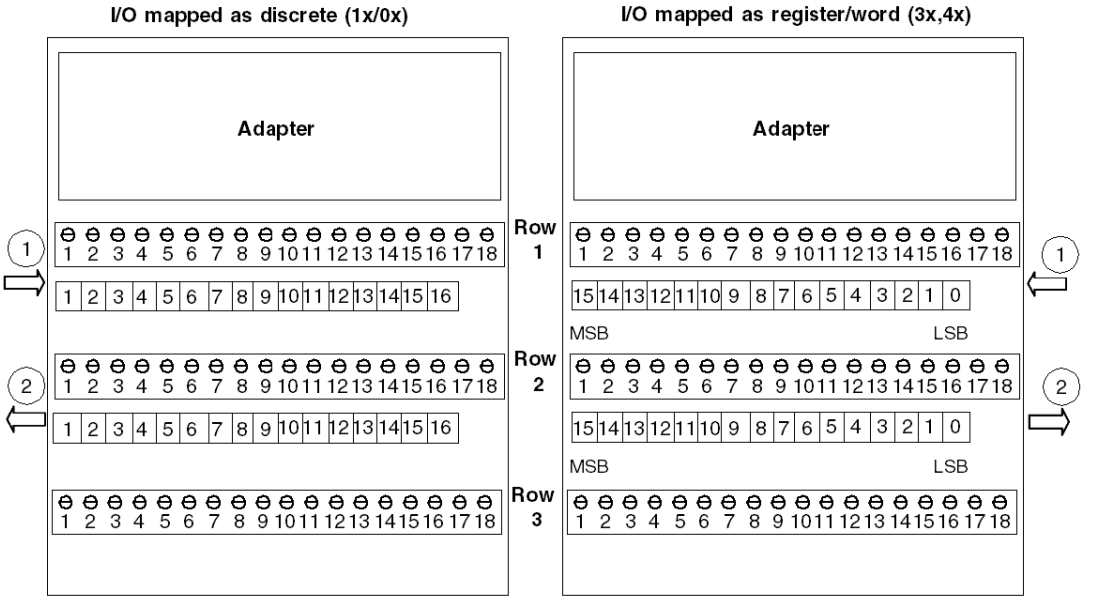

1 inputs
2 outputs

170 ADM 370 10 24 VDC - 16 Pt. In / 8 Pt. Out @ 2 Amp. Module Base

18

Overview

This chapter describes the 170 ADM 370 10 TSX Momentum I/O base.

What's in this Chapter?

This chapter contains the following topics:

Topic	Page
Front Panel Components	276
Specifications	278
Internal Pin Connections	281
Field Wiring Guidelines	282
Wiring Diagrams	284
I/O Mapping	289

Front Panel Components

Overview

This section contains an illustration of the front panel of the 170 ADM 370 10 I/O base and a description of the LEDs.

Front Panel Illustration

The front panel of the I/O base is shown in the illustration below.

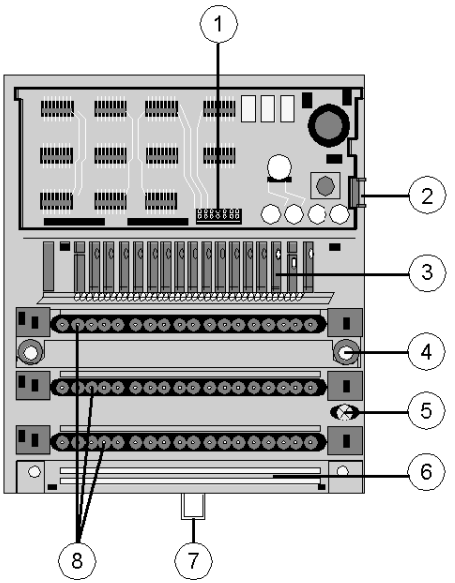

Components of the I/O module

Label	Description
1	Internal interface (ATI) connector
2	Locking and ground contact for the adapter
3	LED status display
4	Mounting holes for panel mount
5	Grounding screw
6	Busbar Mounting Slot
7	Locking tab for DIN rail mount
8	Sockets for the terminal connectors

LED Illustration

The LEDs are shown in the illustration below.

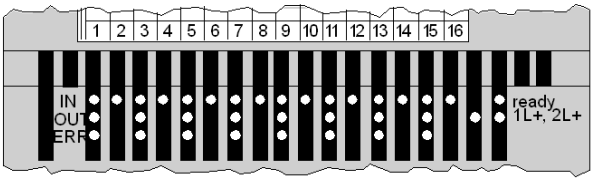

LED Descriptions

The LEDs are described in the table below.

Indicator	Condition	Message
Ready	Green	Module is ready to communicate. Operating voltage for internal logic (5 V) is present.
	Off	Module not ready.
1L+	Green	Output voltage 1L+ of inputs 1 ... 4 (group 1) is present
	Off	Output voltage of inputs 1 ... 4 (group 1) is not present
2L+	Green	Output voltage 2L+ of inputs 5 ... 8 (group 2) is present
	Off	Output voltage of inputs 5... 8 (group 2) is not present
Upper row IN 1...16	Green	Input status (an LED per input); Input point active, ie. input carries a 1 signal (logically ON)
	Off	Input status (an LED per input); Input point inactive, ie. input carries a 0 signal (logically OFF)
Middle row OUT 1,3, 5, 7, 9, 11, 13, 15	Green	Output status (an LED per output); Output point active, ie. output carries a 1 signal (logically ON)
	Off	Output status (an LED per output); Output point inactive, ie. Output carries a 0 signal (logically OFF)
Lower row ERR 1,3, 5, 7, 9, 11, 13, 15	Red	Output overload (an LED per output). Overload on the corresponding output.
	Off	Outputs 1 ... 8 operating normally.
The following functionality and LEDs have been removed in PV02 units and later.		
Lower row ERR 2, 6, 10, 14	Red	Input sensor leads shorted circuit or overloaded (one LED per sensor supply line).
	Off	Input sensor current applied

Specifications

Overview

This section contains specifications for the 170 ADM 370 10 I/O base.

General Specifications

Module type	16 discrete inputs in 1 group 8 discrete outputs in 2 groups (4 pts/group)
Supply voltage	24 VDC
Supply voltage range	20...30 VDC
Supply current consumption	max. 250 mA at 24 VDC
Power dissipation	6 W + (# of input points on x .144 W) + (# of output points on x 1 W))
I/O map	1 input word 1 output word

Isolation

Input to input	none
Output group to output group	500 VAC
Input to output group	500 VAC
Field to communication adapter	Defined by communication adapter type

Fuses

Internal	none
External: operating and input voltage	According to the supply of the connected sensors– not to exceed 4A fast-blow
External: output voltage	According to the supply of the connected actuators– not to exceed 8 A slow-blow

EMC

Immunity	IEC 1131-2 Surge on auxiliary power supply 500V
Emissions	EN 50081-2
Agency approvals	UL, CSA, CE, FM Class 1 Div. 2 pending

Physical Dimensions

Width	125 mm (4.9 in)
Depth (with no adapter)	40 mm (1.54 in)
Length	141.5 mm (5.5 in) no or one busbar 159.5mm (6.3in) two busbars 171.5 mm (6.75in) three busbars
Weight	220 g (0.49 lb)

Discrete Inputs

Number of points	16
Number of groups	4
Points per group	4
Signal type	True High
IEC 1131 type	1+ (See Appendix *IEC 1131 Input Types, page 673* for definitions of IEC input types.)
ON voltage	+11 ... +30 VDC
OFF voltage	-3 ... +5 VDC
Input current	2.5 mA minimum ON (6 mA at 24 VDC) 1.2 mA maximum OFF
Input voltage range	-3 ... +30 VDC
Input resistance	4 kOhm
Response time	2.2 ms OFF to ON 3.3 ms ON to OFF

Discrete Outputs

Output type	Solid state switch
Output supply voltage	24 VDC
Output supply voltage range	20 ... 30 VDC
Output voltage	External supply - .5 VDC
Number of points	8
Number of groups	2
Points per group	4
Current capacity	2 A/point maximum 8 A/group 16 A/module
Signal type	True High

Leakage current (output out)	< 1 mA @ 24 VDC
Surge (inrush) current	2.8 A for 10 s max.
On state voltage drop	< 0.5 VDC @ 2 A
Fault sensing	Outputs are electronically safeguarded to assist in short circuit and overload protection
Fault reporting outputs	1 red LED/point (row 3) ON when overload occurs
Fault reporting input voltage	1 red LED (row 3) signals the state of 4 inputs belonging to the input power supply group
Error indication	In the event of an overload for on least 1 output, for a short-circuit or overload in one of the 4 encoder supply groups, (I/O-Error) to communication adapter
Response time (resistive load / 2 A)	< 0.1 ms OFF to ON < 0.1 ms ON to OFF
Maximum switching cycles	1000/h for 2 A inductive load (for inductances > 100 mH and switching currents > 1A, a clamping diode must be installed 100/s for 2 A resistive load 10/s for 1.2 W Tungsten load (when the startup-current factor <= 10 the nominal current)

Internal Pin Connections

Overview

This section contains an illustration showing the internal connections between terminals on the I/O base and an optional busbar.

Illustration

Rows 1 through 3 show the internal connections between terminals on the I/O base. Row 4 through 5 show the internal connections on the optional busbar.

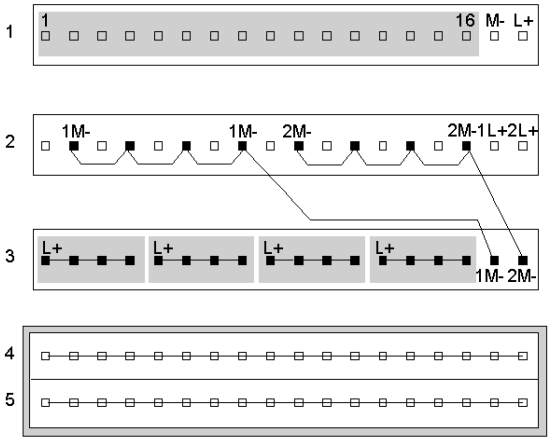

Field Wiring Guidelines

Overview

Inputs are field wired to row 1 of the base. The outputs are field wired to row 2. This section contains wiring guidelines and precautions.

Terminal Connector

To connect field devices to the I/O base, you need a field wiring terminal connector. Schneider Electric sells terminal connectors in sets of three.

Type	Part Number
Screw-in	170 XTS 001 00
Spring-clip	170 XTS 002 00

Busbar May Be Required

Depending on the type of field devices you are using, you may need a 1-, 2-, or 3-row busbar. The following busbars are available from Schneider Electric.

Type	Number of Rows	Part Number
Screw-in	1 - row	170 XTS 006 01
	2 - row	170 XTS 005 01
Spring-clip	1 - row	170 XTS 007 01
	2 - row	170 XTS 008 01

Mapping Terminal Blocks

⚠ CAUTION

POTENTIAL FOR SHORT CIRCUITS AND/OR POWER-UP SPIKES

Provide external fuses on the operating voltage to protect the module. Appropriate fuse values are shown in the wiring illustration. An unprotected module may be subject to short circuits and/or power-up spikes.

Failure to follow these instructions can result in injury or equipment damage.

The following table shows mapping terminal blocks and optional busbars.

Row	Terminal	Function
1	1...16	Inputs
	17	Return (M-)
	18	+ 24 VDC Operating voltage (L+)
2	1, 3, 5, 7	Outputs for group 1
	9, 11, 13, 15	Outputs for group 2
	2, 4, 6, 8	Return (1M-) group 1 outputs
	10, 12, 14, 16	Return (2M-) group 2 outputs
	17/18	+ 24 VDC for output group 1 (1L+) and group 2 (2L+)
3	1 ... 4	Input voltage for terminal pins 1 ... 4 (L+)
	5 ... 8	Input voltage for terminal pins 5 ... 8 (L+)
	9 ... 12	Input voltage for terminal pins 9 ... 12 (L+)
	13 ... 16	Input voltage for terminal pins 13 ... 16 (L+)
	17/18	Return (1M-, 2M-)
4	1 ... 18	Return (M-) for sensors
5	1 ... 18	Protective earth (PE)

Protective Circuit May Be Required

When contacted switches are used on the input lines or when lines to the peripherals are very long, the outputs of inductive loads require protective circuitry with a clamping/suppressor diode. Install the protective circuit prallel to the operating coil.

Wiring Diagrams

Overview

This section provides diagrams to assist you in wiring the following types of devices:

- 2-wire devices
- sensors activated by an output
- 4-wire sensors with a 2-wire actuator
- broken wire detection

2-Wire Devices

The diagram below shows an example of wiring for two-wire devices.

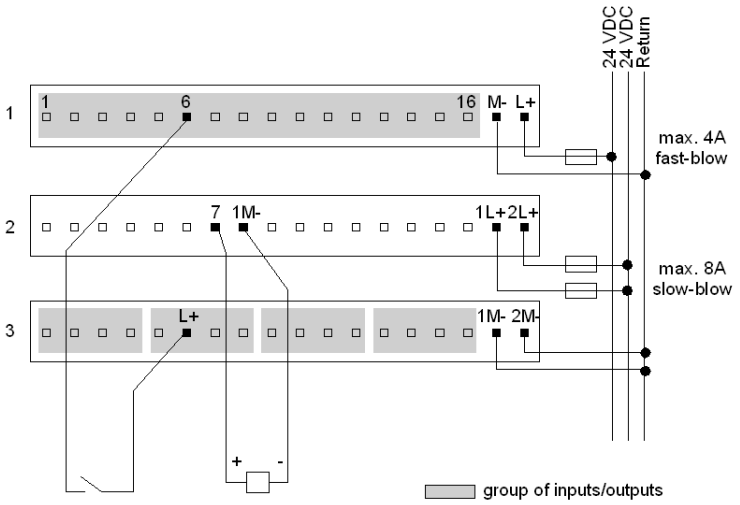

Sensor Activated by Output

The wiring diagram below shows an example of a sensor activated by an output.

The diagram shows the sensors being supplied with voltage only when the corresponding output delivers a high signal. A similar wiring connection scheme can be used with 2- and 3-wire sensors.

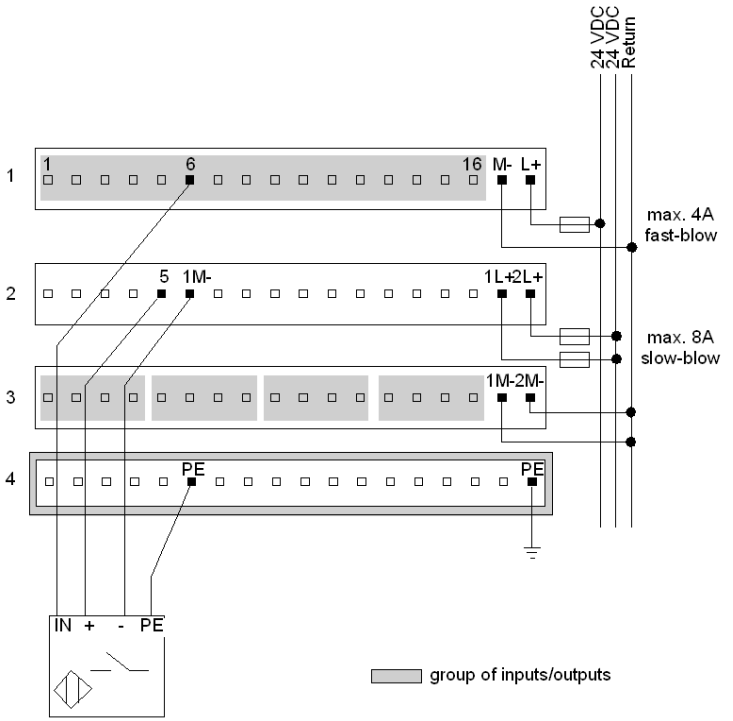

Four-Wire Sensor with a Two-Wire Actuator

The diagram below shows a four-wire sensor with a two-wire actuator. The process of wiring a 3-wire sensor is very similar to the one below. Because 3-wire sensors do not require PE, a 1-row busbar could be used instead of the 2-row busbar shown.

Separate connections to pins 17 and 18 are shown on row 3, even though these two pins are internally connected. This is done to halve the load.

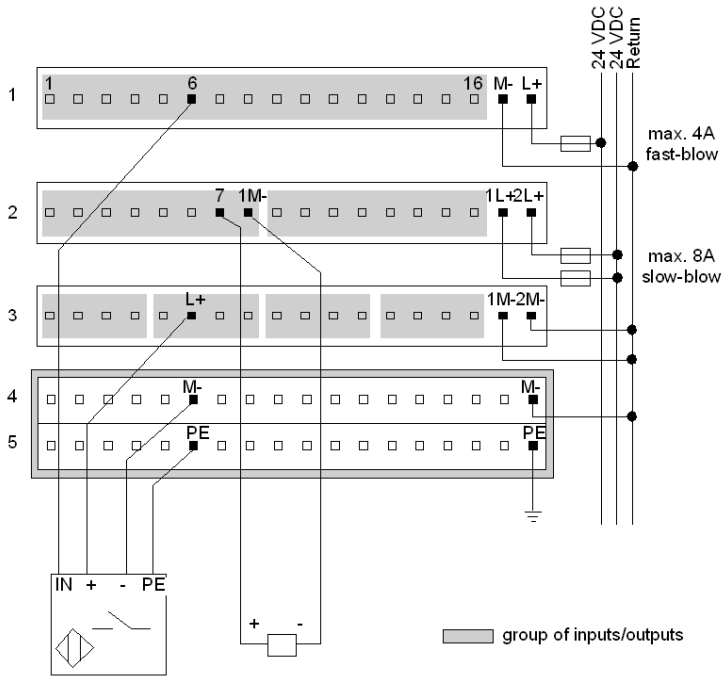

Broken Wire Detection

The diagram below shows a three-wire actuator with an optional wiring scheme for broken wire detection. The dotted line reads back whether or not current has reached the actuator. When the output on pin 5, row 2, is high, the input from pin 6, row 1, must also be high.

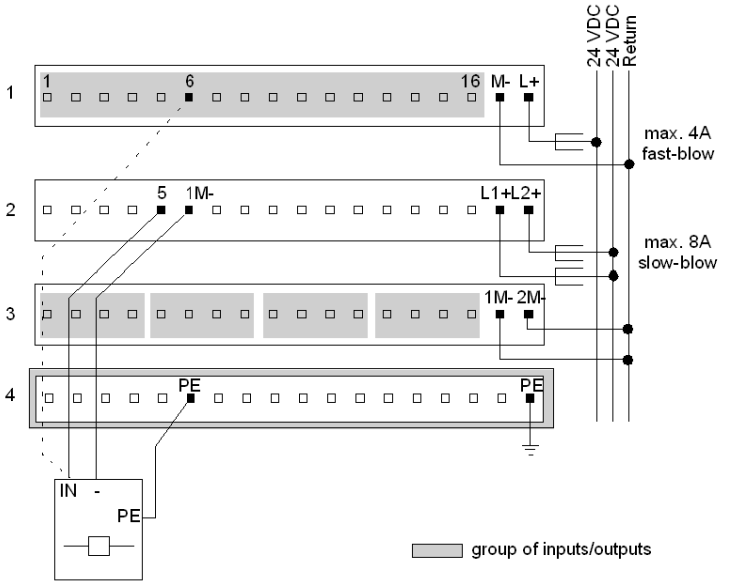

Simplified Input Schematics

The following diagram shows the field-side input circuitry.

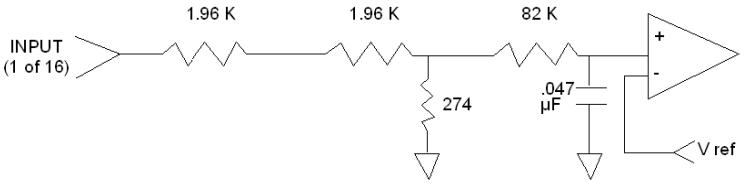

Simplified Output Schematics

The following diagram shows the field-side output circuitry.

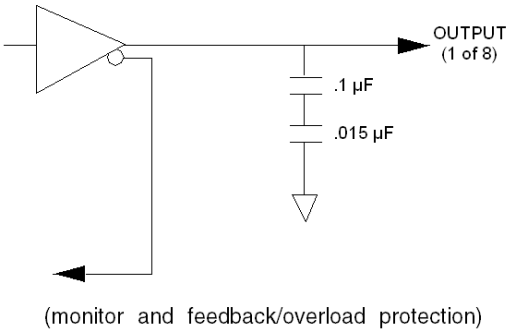

I/O Mapping

Overview

The 170 ADM 370 10 TSX Momentum I/O base supports 16 discrete inputs and 8 discrete outputs. This section contains information about the mapping of the I/O data into input words and output words.

I/O Map

The I/O base may be mapped as one input word and one output word or as 16 discrete input points and 8 discrete output points.

IEC vs. Ladder Logic

In order to correctly field wire the inputs/output and map the input/output data, you need to know which type of Momentum Adapter is mounted on the base.

Adapters may be either IEC compliant or 984 Ladder Logic compliant.

	IEC Compliant	**984 Ladder Logic Compliant**
Momentum Processor Adapters	All	None
Momentum Communication Adapters	All, except 170 NEF 110 21 170 NEF 160 21 170 FNT 110 00 170 FNT 110 01	170 NEF 110 21 170 NEF 160 21 170 FNT 110 00 170 FNT 110 01

Data Mapping

The figure below shows how data is mapped on the I/O base with an IEC Compliant adapter. When the I/O is mapped as discrete points (1x/0x) , the MSB is assigned to Pin 1and the LSB is assigned to Pin 16. When the I/O is mapped as a word or register (3x/4x), the MSB (bit 15) is assigned to Pin 16 and the LSB (bit 0) is assigned to Pin 1.

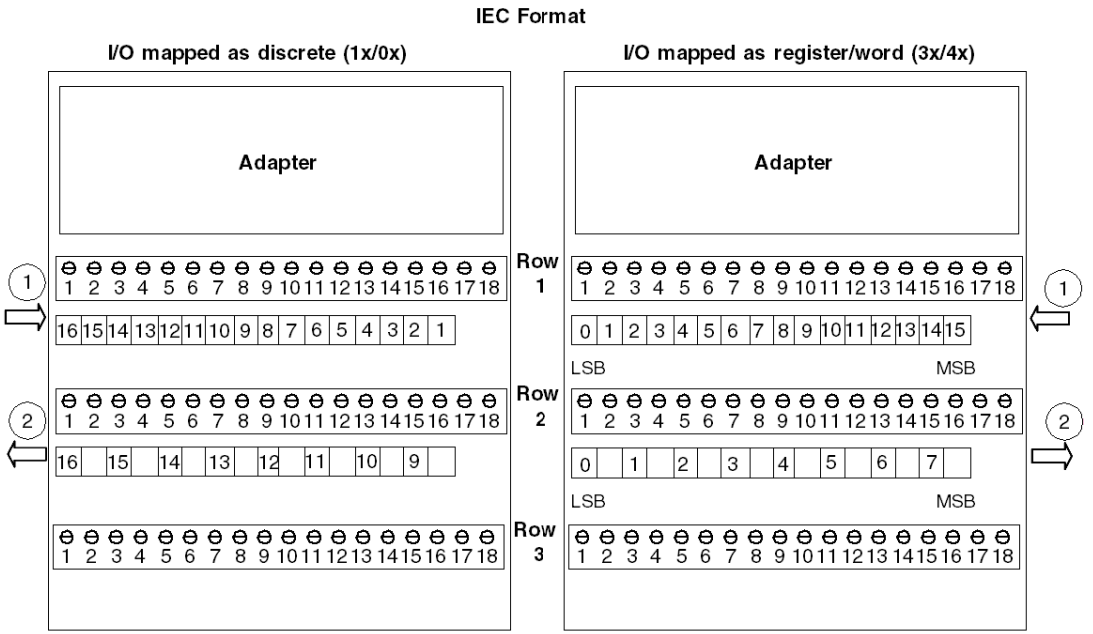

1 inputs
2 outputs

The figure below shows how data is mapped on the I/O base with a Ladder Logic Compliant adapter. When the I/O is mapped as discrete points (1x/0x), the MSB is assigned to Pin 16 and the LSB is assigned to Pin 1. When the I/O is mapped as a word or register, the MSB (bit 15) is assigned to Pin 1and the LSB (bit 0) is assigned to Pin 16.

984 Format

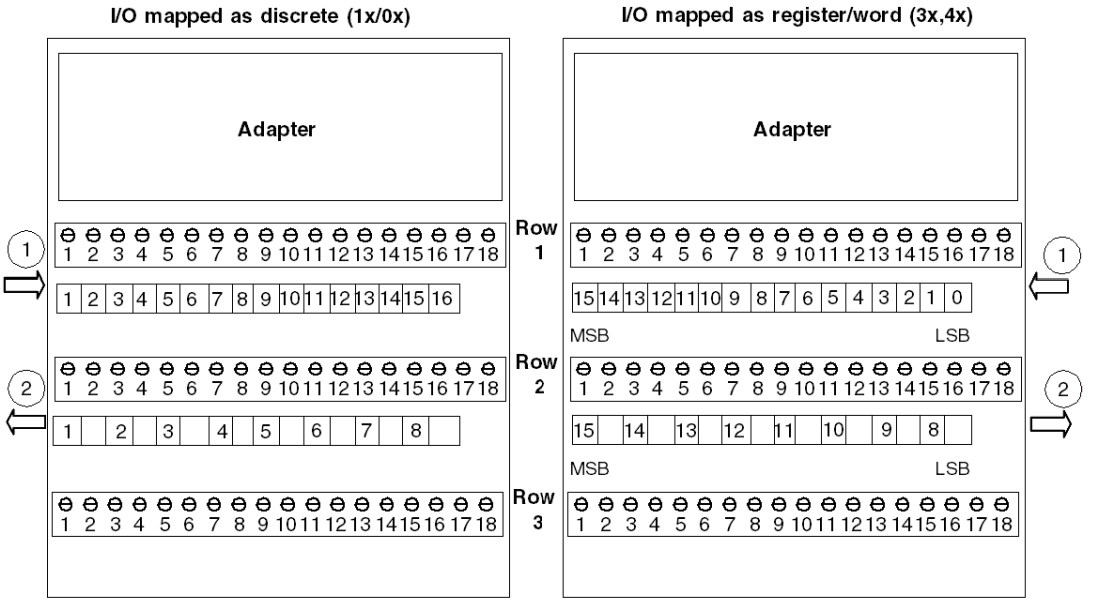

1 inputs
2 outputs

170 ADM 390 10 24 VDC - 16 Pt. In / 12 Pt. Out Monitored Module Base

19

Overview

This chapter describes the 170 ADM 390 10 TSX Momentum I/O base.

What's in this Chapter?

This chapter contains the following topics:

Topic	Page
Front Panel Components	294
Specifications	296
Internal Pin Connections	299
Field Wiring Guidelines	300
Wiring Diagrams	302
I/O Mapping	305

Front Panel Components

Overview

This section contains an illustration of the front panel of the 170 ADM 390 10 I/O base and a description of the LEDs.

Front Panel Illustration

The front panel of the I/O base is shown in the illustration below.

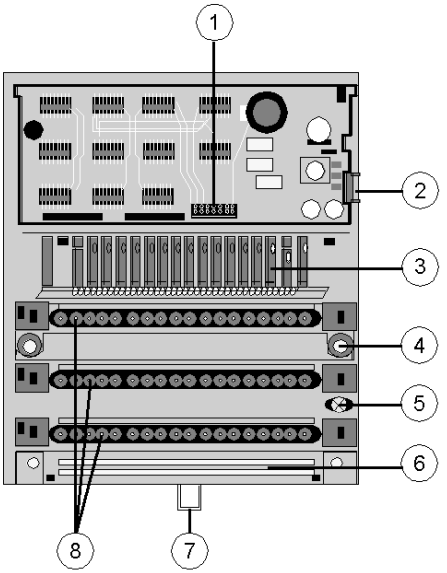

Components of the I/O module

Label	Description
1	Internal interface (ATI) connector
2	Locking and ground contact for the adapter
3	LED status display
4	Mounting holes for panel mount
5	Grounding screw
6	Busbar Mounting Slot
7	Locking tab for DIN rail mount
8	Sockets for the terminal connectors

LED Illustration

The LEDs are shown in the illustration below.

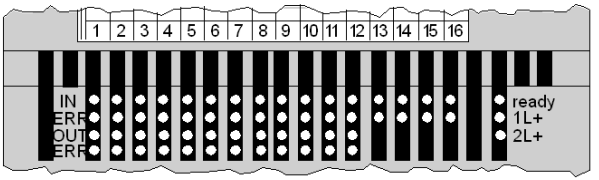

LED Descriptions

The LEDs are described in the table below.

Indicator	Condition	Message
Ready	Green	Module is ready to communicate. Operating voltage L+ for internal logic (5 V) is present.
	Off	Module is not ready.
1L+	Green	Output voltage 1L+ of inputs 1 ... 8 (group 1) is present
	Off	Output voltage of inputs 1 ... 8 (group 1) is not present
2L+	Green	Output voltage 2L+ of inputs 9 ... 12 (group 2) is present
	Off	Output voltage of inputs 9 ... 12 (group 2) is not present
Row 1 IN 1...16	Green	Input status (an LED per input); Input point active, ie. input carries a 1 signal (logically ON)
	Off	Input point inactive, ie. input carries a 0 signal (logically OFF)
Row 2 ERR 1...16	RED	Input detects broken wire (an LED per input)
	Off	Inputs 1 ... 16 operating normally.
Row 3 OUT 1...12	Green	Output status (an LED per output); Output point active, ie. output carries a 1 signal (logically ON)
	Off	Output status (an LED per output); Output point inactive, ie. Output carries a 0 signal (logically OFF)
Row 4 ERR 1...12	Red	Output overload (an LED per output). Short circuit or overload on the corresponding output.
	Off	Outputs 1 ... 16 operating normally.

Specifications

Overview

This section contains specifications for the 170 ADM 390 10 I/O base.

General Specifications

Module type	16 discrete inputs in 1 group 12 discrete outputs in 2 groups (8 pts/group 1 and 4 pts/group 2)
Supply voltage	24 VDC
Supply voltage range	20...30 VDC
Supply current consumption	max. 180 mA at 24 VDC
Power dissipation	6 W + ((# of input points on x .125 W) + (# of output points on x .25 W))
I/O map	3 input word 1 output word

Isolation

Input to input	none
Output group to output group	none
Input to output group	none
Field to communication adapter	Defined by communication adapter type

Fuses

Internal	none
Operating voltage	1 A slow-blow (Bussmann GDC-1A or equivalent)
Input voltage	According to the supply dimensioning of the connected sensors–not to exceed 4 A fast-blow/group
Output voltage	According to the supply dimensioning of the connected actuators–not to exceed 4 A fast-blow/group

EMC

Immunity	IEC 1131-2 Surge on auxiliary power supply 500V
Emissions	EN 50081-2
Agency approvals	UL, CSA, CE, FM Class 1, Div. 2

Physical Dimensions

Width	125 mm (4.9 in)
Depth (with no adapter)	40 mm (1.54 in)
Length	141.5 mm (5.5 in) no or one busbar 159.5mm (6.3in) two busbars 171.5 mm (6.75in) three busbars
Weight	200 g (0.495lb)

Discrete Inputs

Number of points	16
Number of groups	1
Points per group	16
Signal type	True High
IEC 1131 type	1+ (see appendix *IEC 1131 Input Types, page 673* for definitions of IEC input types)
ON voltage	+11 ... +30 VDC
OFF voltage	-3 ... +5 VDC
Input current	2.5 mA minimum ON (5.7 mA at 24 VDC) 1.2 mA maximum OFF
Broken wire detection	Input current less than 0.2 mA (0.3 mA required as minimum current for logical zero)
Input resistance	4 kOhm
Response time	2.2 ms OFF to ON 3.3 ms ON to OFF
Fault reporting	1 red LED/point (row 2) ON when indicating a broken wire
Error indication	Broken wire detection for on least 1 input (I/O-Error) to communication adapter

Discrete Outputs

Output type	Solid state switch
Output supply voltage	24 VDC
Output supply voltage range	20 ... 30 VDC
Output voltage	External supply - .5 VDC
Number of points	12
Number of groups	2
Points per group	8 (Group 1) and 4 (Group 2)
Current capacity	0.5 A/point maximum 4 A/group 1 2 A/group 2 6 A/module
Signal type	True High
Leakage current (output out)	< 1 mA @ 24 VDC
On state voltage drop	< 0.5 VDC @ 0.5 A
Fault sensing	Outputs are electronically safeguarded to assist in short circuit and overload protection
Fault reporting	1 red LED/point (row 4) ON when overload occurs
Fault reporting input voltage	1 red LED (row 3) signals the state of 4 inputs belonging to the input power supply group
Response time (resistive load / 0.5 A)	< 0.1 ms OFF to ON < 0.1 ms ON to OFF
Maximum switching cycles	1000/h for 0.5 A inductive load 100/s for 0.5 A resistive load 8/s for 1.2 W bulb load

Internal Pin Connections

Overview

This section contains an illustration showing the internal connections between terminals on the I/O base and an optional busbar.

Illustration

Rows 1 through 3 show the internal connections between terminals on the I/O base. Row 4 through 5 show the internal connections on the optional busbar.

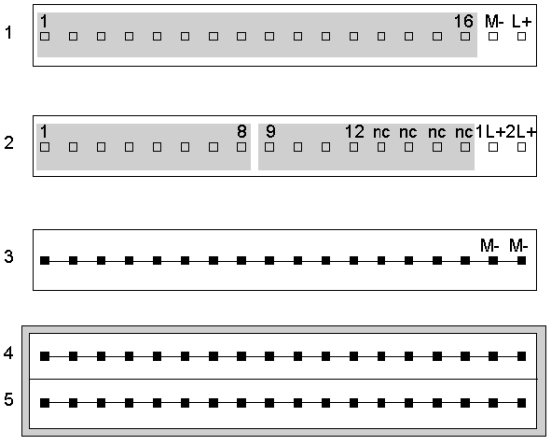

Field Wiring Guidelines

Overview

Inputs are field wired to row 1 of the base. The outputs are field wired to row 2. This section contains wiring guidelines and precautions.

Terminal Connector

To connect field devices to the I/O base, you need a field wiring terminal connector. Schneider Electric sells terminal connectors in sets of three.

Type	Part Number
Screw-in	170 XTS 001 00
Spring-clip	170 XTS 002 00

Busbar May Be Required

Depending on the type of field devices you are using, you may need a 1-, 2-, or 3-row busbar. The following busbars are available from Schneider Electric.

Type	Number of Rows	Part Number
Screw-in	1 - row	170 XTS 006 01
	2 - row	170 XTS 005 01
Spring-clip	1 - row	170 XTS 007 01
	2 - row	170 XTS 008 01

Mapping Terminal Blocks

⚠ CAUTION

POTENTIAL FOR SHORT CIRCUITS AND/OR POWER-UP SPIKES

Provide external fuses on the operating voltage to protect the module. Appropriate fuse values are shown in the wiring illustration. An unprotected module may be subject to short circuits and/or power-up spikes.

Failure to follow these instructions can result in injury or equipment damage.

The following table shows mapping terminal blocks and optional busbars.

Row	Terminal	Function
1	1...16	Inputs
	17	Return (M-)
	18	+ 24 VDC Operating voltage (L+)
2	1...8	Outputs for group 1
	9...12	Outputs for group 2
	13...16	not connected (nc)
	17/18	+ 24 VDC for output group 1 (1L+) and group 2 (2L+)
3	1 ... 18	- Return (M-)
4	1 ... 18	Input voltage for terminal pins 1...16, row 1, or PE
5	1 ... 18	Protective earth (PE)

Protective Circuit May Be Required

When contacted switches are used on the input lines or when lines to the peripherals are very long, the outputs of inductive loads require protective circuitry with a clamping/suppressor diode. Install the protective circuit prallel to the operating coil.

Wiring Diagrams

Overview

This section provides diagrams to assist you in wiring the following types of devices:

- 2-wire configuration
- 3-wire configuration
- 4-wire configuration

2-Wire Devices

The diagram below shows an example of wiring for 2-wire devices. Use a 1-row busbar for this configuration.

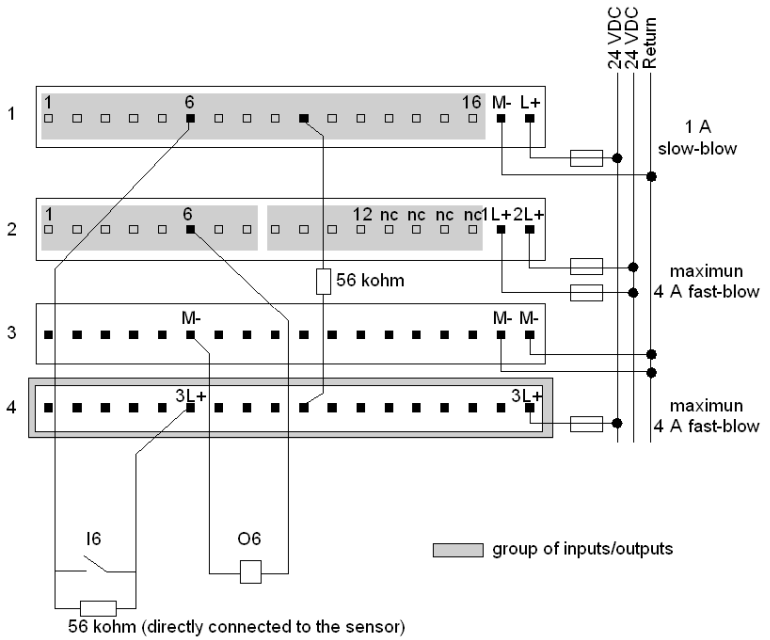

3- and 4-Wire Devices

To connect a 3- or 4-wire sensor, you need a 2-row busbar.

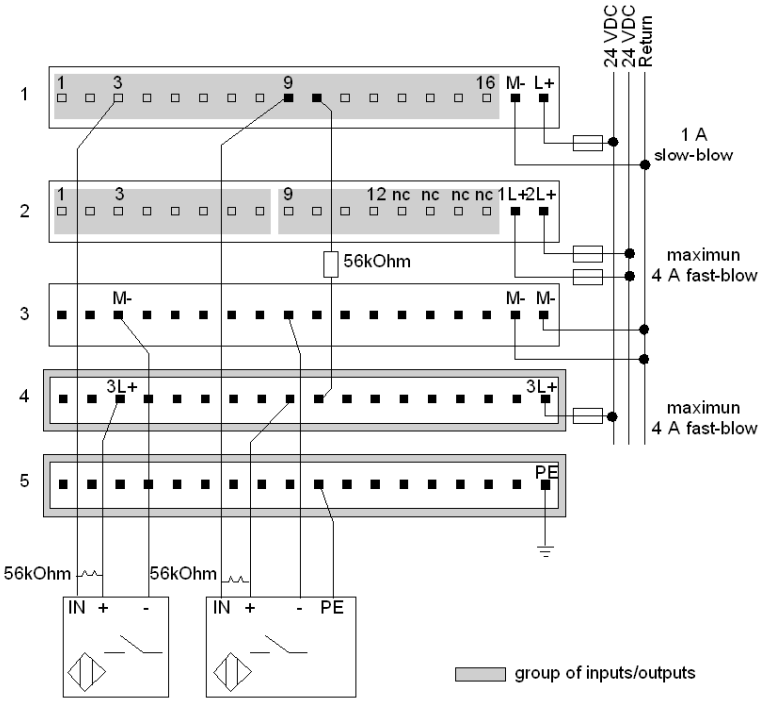

Simplified Input Schematics

The following diagram shows the field-side input circuitry.

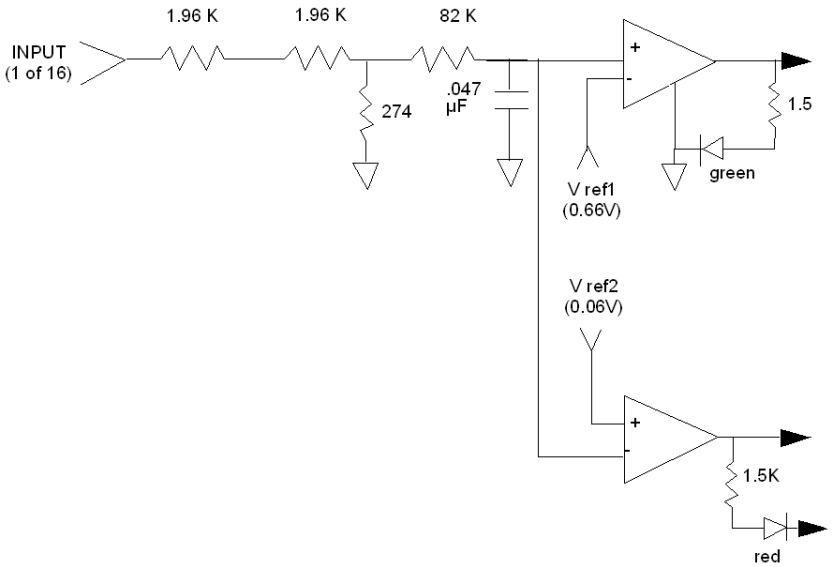

Simplified Output Schematics

The following diagram shows the field-side output circuitry.

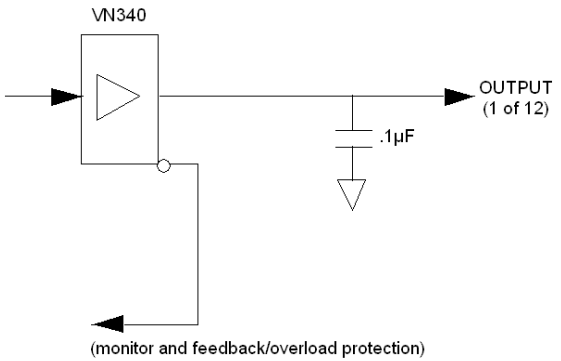

I/O Mapping

Overview

The 170 ADM 390 10 TSX Momentum I/O base supports 16 discrete inputs and 12 discrete outputs. This section contains information about the mapping of the I/O data into input words and output words.

I/O Map

The I/O base must be mapped as three input word and one output word, as follows:

Word	Input Data	Output Data
1	Fault detection status on the 12 outputs	Value for output channels 1 ... 12
2	Fault detection status on the 16 inputs	not used
3	Value for input channels 1 ... 16	not used

Fault Detection for Outputs

The following diagram shows how bits are assigned in the first input word:

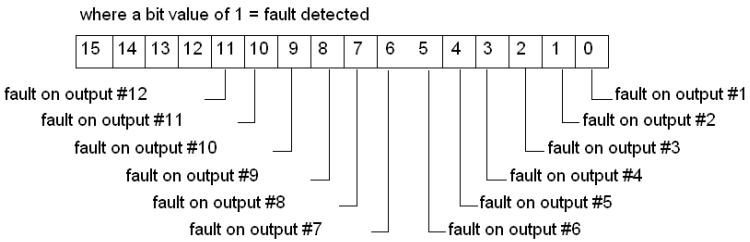

Fault Detection for Inputs

The following diagram shows how bits are assigned in the second input word:

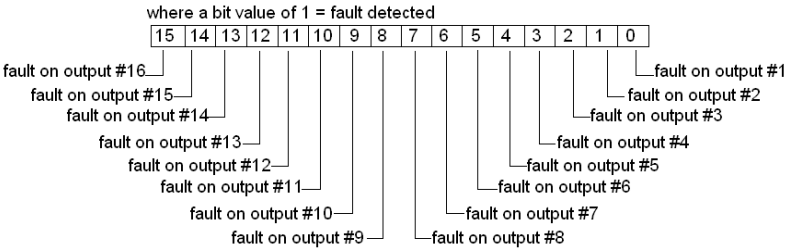

IEC vs. Ladder Logic

In order to correctly field wire the inputs/outputs and map the input/output data, you need to know which type of Momentum Adapter is mounted on the base.

Adapters may be either IEC compliant or 984 Ladder Logic compliant.

	IEC Compliant	**984 Ladder Logic Compliant**
Momentum Processor Adapters	All	None
Momentum Communication Adapters	All, except 170 NEF 110 21 170 NEF 160 21 170 FNT 110 00 170 FNT 110 01	170 NEF 110 21 170 NEF 160 21 170 FNT 110 00 170 FNT 110 01

Data Mapping

The figure below shows how data is mapped on the I/O base with an IEC Compliant adapter. When the I/O is mapped as discrete points (1x/0x) the MSB is assigned to Pin 1 and the LSB is assigned to Pin 16. When the I/O is mapped as a word or register (3x/4x) the MSB is assigned to Pin 16 and the LSB is assigned to Pin 1.

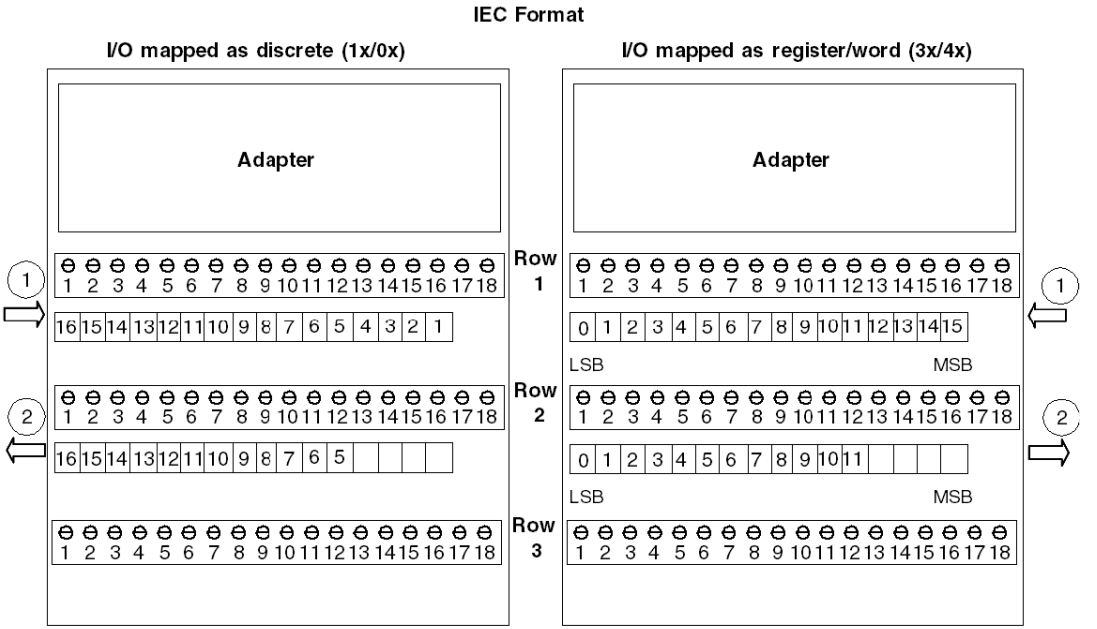

1 inputs
2 outputs

The figure below shows how data is mapped on the I/O base with a Ladder Logic Compliant adapter. When the I/O is mapped as discrete points (1x/0x) the MSB is assigned to Pin16 and the LSB is assigned to Pin 1. When the I/O is mapped as a word or register (3x/4x) the MSB is assigned to Pin 1 and the LSB is assigned to Pin 16.

984 Format

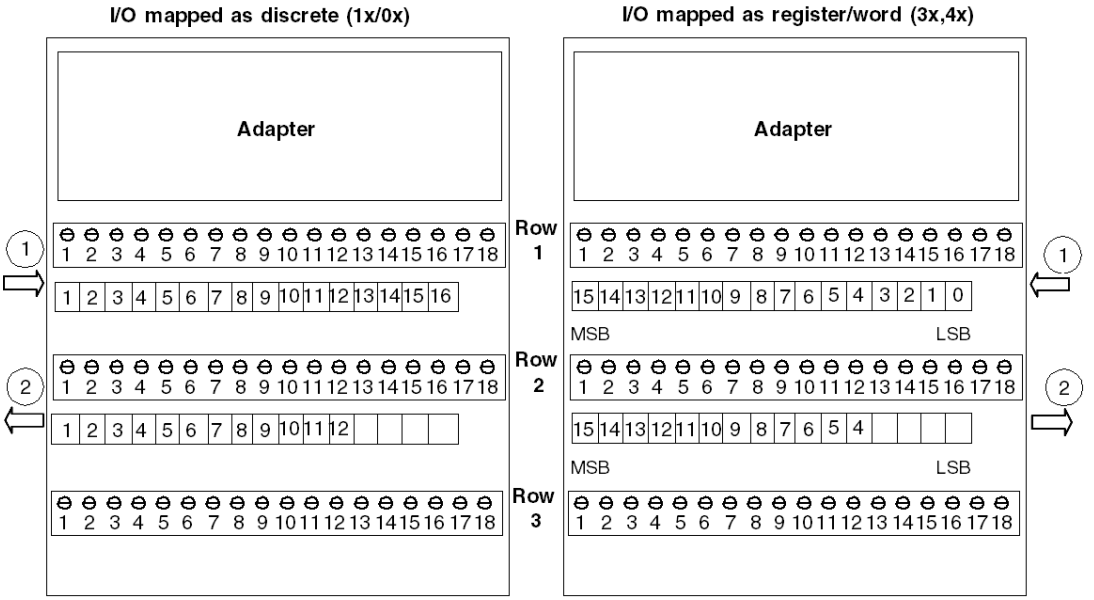

1 inputs
2 outputs

170 ADM 390 30 24 VDC - 10 Pt. In / 8 Pt. Relay Out Module Base

20

Overview

This chapter describes the 170 ADM 390 30 TSX Momentum I/O base.

What's in this Chapter?

This chapter contains the following topics:

Topic	Page
Front Panel Components	310
Specifications	312
Internal Pin Connections	315
Field Wiring Guidelines	316
Wiring Diagrams	318
I/O Mapping	321

Front Panel Components

Overview

This section contains an illustration of the front panel of the 170 ADM 390 30 I/O base and a description of the LEDs.

Front Panel Illustration

The front panel of the I/O base is shown in the illustration below.

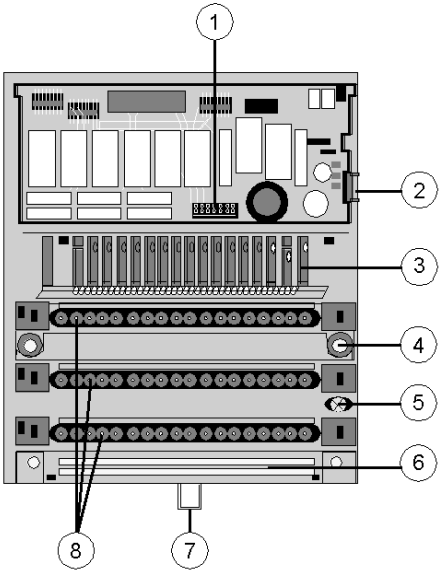

Components of the I/O module

Label	Description
1	Internal interface (ATI) connector
2	Locking and ground contact for the adapter
3	LED status display
4	Mounting holes for panel mount
5	Grounding screw
6	Busbar Mounting Slot
7	Locking tab for DIN rail mount
8	Sockets for the terminal connectors

LED Illustration

The LEDs are shown in the illustration below.

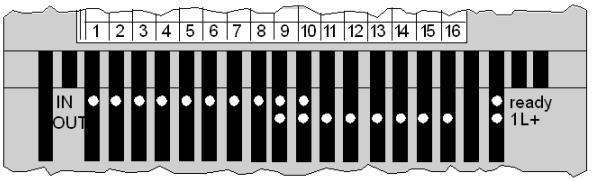

LED Descriptions

The LEDs are described in the table below.

Indicator	Condition	Message
Ready	Green	Module is ready to communicate. Operating voltage for internal logic (5 V) is present.
	Off	Module is not ready.
1L+	Green	Input voltage 1L+ of inputs 1 ... 10 is present
	Off	Input voltage of inputs 1 ... 10 is not present
Upper row IN 1...10	Green	Input status (an LED per input); Input point active, ie. input carries a 1 signal (logically ON)
	Off	Input status (an LED per input); Input point inactive, ie. input carries a 0 signal (logically OFF)
Middle row OUT 9 ...16	Green	Output status (an LED per output); Output point active, ie. output carries a 1 signal (logically ON)
	Off	Output status (an LED per output) Output point inactive, ie. Output carries a 0 signal (logically OFF)

Specifications

Overview

This section contains specifications for the 170 ADM 390 30 I/O base.

General Specifications

Module type	10 discrete inputs in 1 group 8 relay outputs as normally open contacts in 2 groups, 4 pts/group
Supply voltage	24 VDC
Supply voltage range	20...30 VDC
Supply current consumption	max. 250 mA at 24 VDC
Power dissipation	6 W + (# of input points on x .144 W)
I/O map	1 input word 1 output word

Protective Circuit Required

To reduce the effects of radiated noise, you must add snubbing components across inductive load devices. The following table provides generic selection guidelines.

Type of Load	Suppression Device	Minimum Component Rating	
AC circuits	50 Ω resistor in series with a 0.47 µfd nonpolarized capacitor across the load	for 120 VAC-powered loads	200 VAC
		for 220 VAC-powered loads	400 VAC
DC circuits	a reverse-biased clamping diode across the load	2 A and greater than twice the maximum load voltage	

Consult relay and contactor manufacturers' catalogs for commercial suppression devices matched to your particular products.

Isolation

Input to input	none
Output group to output group	1 780 VAC RMS
Input to output	1 780 VAC RMS
Output group to communication adapter	1 780 VAC RMS
Field to communication adapter	Defined by communication adapter type

Fuses

Internal	none
External: operating voltage (L+)	1 A slow-blow (Bussmann GDC-1A or equivalent)
External: input voltage (1L+)	max. 4 A fast-blow (Wickmann 19193-4A or equivalent)
External: output voltage (1L1, 2L1)	According to the supply of the connected actuators– not to exceed 8 A slow-blow/ group.

EMC

Immunity	IEC 1131-2 Surge on auxiliary power supply AC 2 KV to PE, 1 KV to differential surge on auxiliary power supply DC 0.5 KV,
Emissions	EN 50081-2
Agency approvals	UL, CSA, CE, FM Class 1 Div. 2 pending

Physical Dimensions

Width	125 mm (4.9 in)
Depth (with no adapter)	40 mm (1.54 in)
Length	141.5 mm (5.5 in) no or one busbar 159.5mm (6.3 in) two busbars 171.5 mm (6.75 in) three busbars
Weight	260 g (0.57lb)

Discrete Inputs

Number of points	10
Number of groups	1
Signal type	True High
IEC 1131 type	1+ (See Appendix *IEC 1131 Input Types, page 673* for definitions of IEC input types.)
ON voltage	+11 ... +30 VDC
OFF voltage	-3 ... +5 VDC
Input current	2.5 mA minimum ON (6 mA at 24 VDC) 1.2 mA maximum OFF

Input voltage range	-3 ... +30 VDC
Input resistance	4 kOhm
Response time	2.2 ms OFF to ON 3.3 ms ON to OFF

Relay Outputs

Output type		Relay normally open output
Number of points		8
Number of groups		2
Points per group		4
Current capacity	20 VDC	> 5 mA (but only for new contacts) max 2 A (switching current <= 5 A) ohmic load max 1 A (L/R <= 40 ms) inductive load
	115 VDC	max. 0.5 A (switching current <= 1.5 A) ohmic load max. 0.15 A (L/R <= 40 ms) inductive load
	24 VAC	max. 2A (switching current <= 5 A) cos = 1 max. 1 A cos = 0.5
	230 VAC	max. 2A (switching current <= 5 A) cos = 1 max. 1 A cos = 0.5
Relay type		Normally Open
Leakage current (output out)		< 1.2 mA @ 230 VAC
Fault sensing		These contacts have an internal suppressor circuit.
Fault reporting		None
Error indication		None
Response time (resistive load / 0.5 A)		10 ms @ 60 Hz OFF to ON 10 ms @ 60 Hz ON to OFF
Maximum switching cycles		> 30 x 106 (mechanical) >=1 x 105 (inductive load with external protective circuitry)

Internal Pin Connections

Overview

This section contains an illustration showing the internal connections between terminals on the I/O base.

Illustration

Rows 1 through 3 show the internal connections between terminalson the I/O base. Row 4 shows the internal connections on the optional busbar.

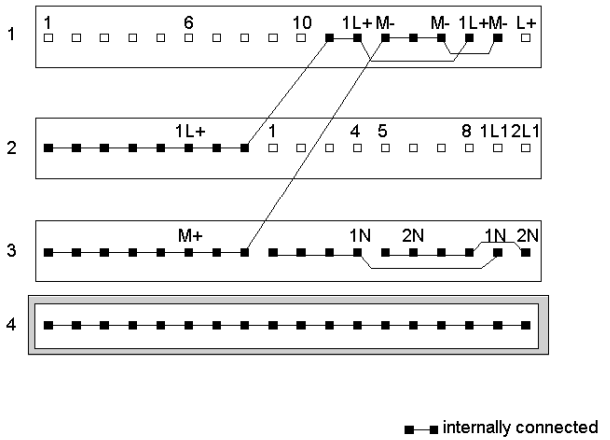

Field Wiring Guidelines

Overview

Inputs are field wired to row 1 of the base. The outputs are field wired to row 2. This section contains wiring guidelines and precautions.

Terminal Connector

To connect field devices to the I/O base, you need a field wiring terminal connector. Schneider Electric sells terminal connectors in sets of three.

Type	Part Number
Screw-in	170 XTS 001 00
Spring-clip	170 XTS 002 00

Busbar May Be Required

Depending on the type of field devices you are using, you may need a 1-row busbar. The following busbars are available from Schneider Electric.

Type	Part Number
Screw-in	170 XTS 006 01
Spring-clip	170 XTS 007 01

Mapping Terminal Blocks

⚠ CAUTION

POTENTIAL FOR SHORT CIRCUITS AND/OR POWER-UP SPIKES

Provide external fuses on the operating voltage to protect the module. Appropriate fuse values are shown in the wiring illustration. An unprotected module may be subject to short circuits and/or power-up spikes.

Failure to follow these instructions can result in injury or equipment damage.

The following table shows mapping terminal blocks and optional busbars.

Row	Terminal	Function
1	1...10	Inputs
	11, 12, 16	Input voltage for terminal pins 1 ... 10, (1L+)
	13, 14, 15	Return (M-) for the inputs
	17	Return (M-) for the module
	18	+ 24 VDC Operating voltage (L+)
2	1 ... 8	Input voltage for pins 1 ... 8, (1L+)
	9 ... 12	Outputs for group 1
	13 ... 16	Outputs for group 2
	17	Output Voltage for relays 1 ... 4 (1L1, 20 ... 115 VDC or 24 ... 230 VDC
	18	Output Voltage for relays 5 ... 8 (2L1, 20 ... 115 VDC or 24 ... 230 VDC
3	1 ... 8	Return (M-) for the inputs
	9, 10, 11, 12	Return (1N) for the relays 1 ... 4
	13, 14, 15, 16	Return (1N) for the relays 5 ... 8
	17/18	Return/Neutral for relay outputs
4	1 ... 18	Protective earth (PE)

Protective Circuit Required

To reduce the effects of radiated noise, you must add snubbing components across inductive load devices. The following table provides generic selection guidelines.

Type of Load	Suppression Device	Minimum Component Rating	
AC circuits	50 Ω resistor in series with a 0.47 µfd nonpolarized capacitor across the load	for 120 VAC-powered loads	200 VAC
		for 220 VAC-powered loads	400 VAC
DC circuits	a reverse-biased clamping diode across the load	2 A and greater than twice the maximum load voltage	

Consult relay and contactor manufacturers' catalogs for commercial suppression devices matched to your particular products.

Wiring Diagrams

Overview

This section provides diagrams to assist you in wiring the following types of devices:

- 3-wire sensor with a 2-wire actuator
- 4-wire sensor with a 3-wire actuator

3-Wire Sensor with a 2-Wire Actuator

The diagram below shows field wiring for a 3-wire (24 VDC) sensor and a 2-wire (230 VAC) actuator.

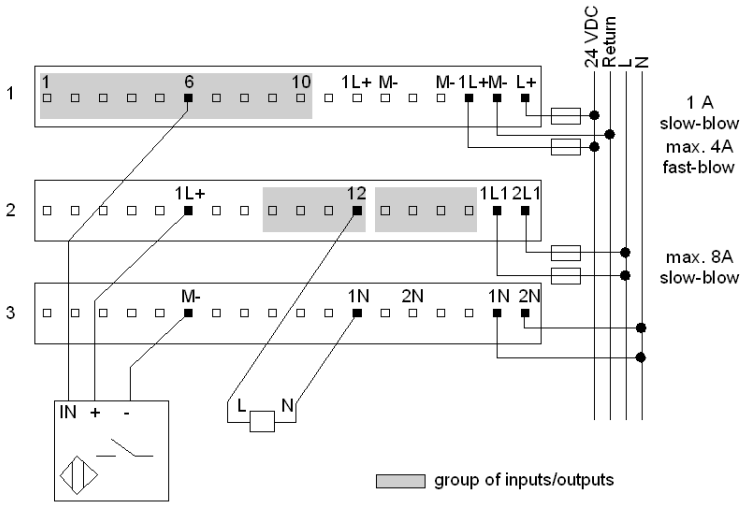

4-Wire Sensor with a 3-Wire Actuator

The diagram below shows field wiring for a 4-wire (24 VDC) sensor and a 3-wire (230 VAC) actuator.

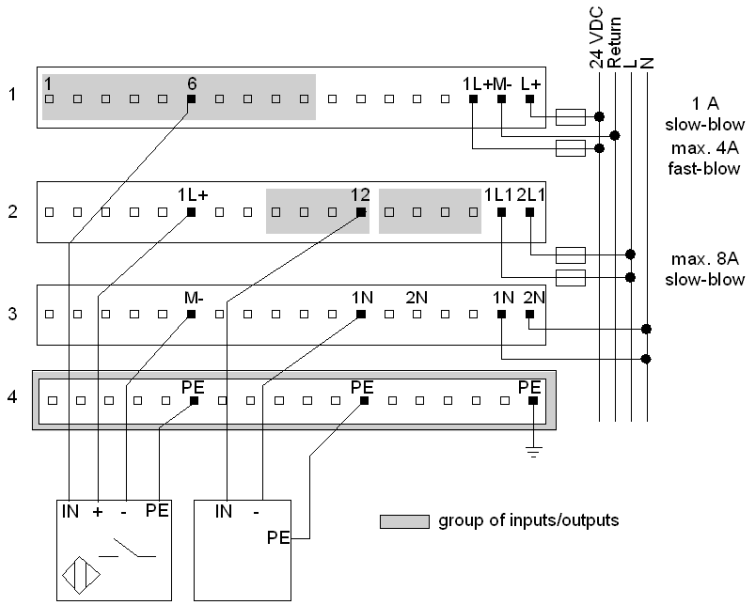

A 1-row busbar is used to provide PE for the 4-wire sensor. No busbar would be required if only 2- and/or 3-wire sensors were used.

Simplified Input Schematics

The following diagram shows the field-side input circuitry.

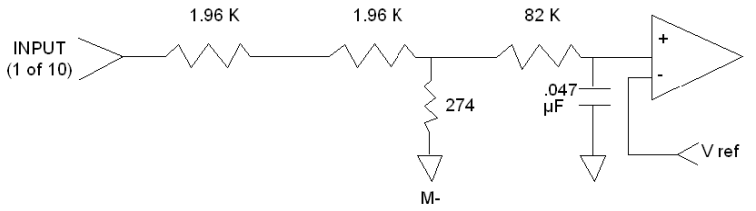

Simplified Output Schematics

The following diagram shows the field-side output circuitry.

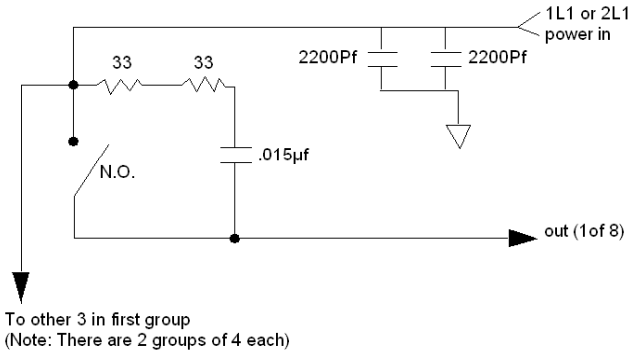

I/O Mapping

Overview

The 170 ADM 390 30 TSX Momentum I/O base supports 10 discrete inputs and 8 discrete outputs. This section contains information about the mapping of the I/O data into input words and output words.

I/O Map

The I/O base may be mapped as one input word and one output word, or as 10 discrete input points and 8 discrete output points.

IEC vs. Ladder Logic

In order to correctly field wire the inputs/outputs and map the input/output data, you need to know which type of Momentum Adapter is mounted on the base.

Adapters may be either IEC compliant or 984 Ladder Logic compliant.

	IEC Compliant	**984 Ladder Logic Compliant**
Momentum Processor Adapters	All	None
Momentum Communication Adapters	All, except 170 NEF 110 21 170 NEF 160 21 170 FNT 110 00 170 FNT 110 01	170 NEF 110 21 170 NEF 160 21 170 FNT 110 00 170 FNT 110 01

Data Mapping

The figure below shows how data is mapped on the I/O base with an IEC Compliant adapter. When the I/O is mapped as discrete points (1x/0x), the MSB is assigned to Pin 1 and the LSB is assigned to Pin 16. When I/O is mapped as a word or register (3x/4x), the MSB (bit 15) is assigned to Pin 16 and LSB (bit 0) is assigned to Pin 1.

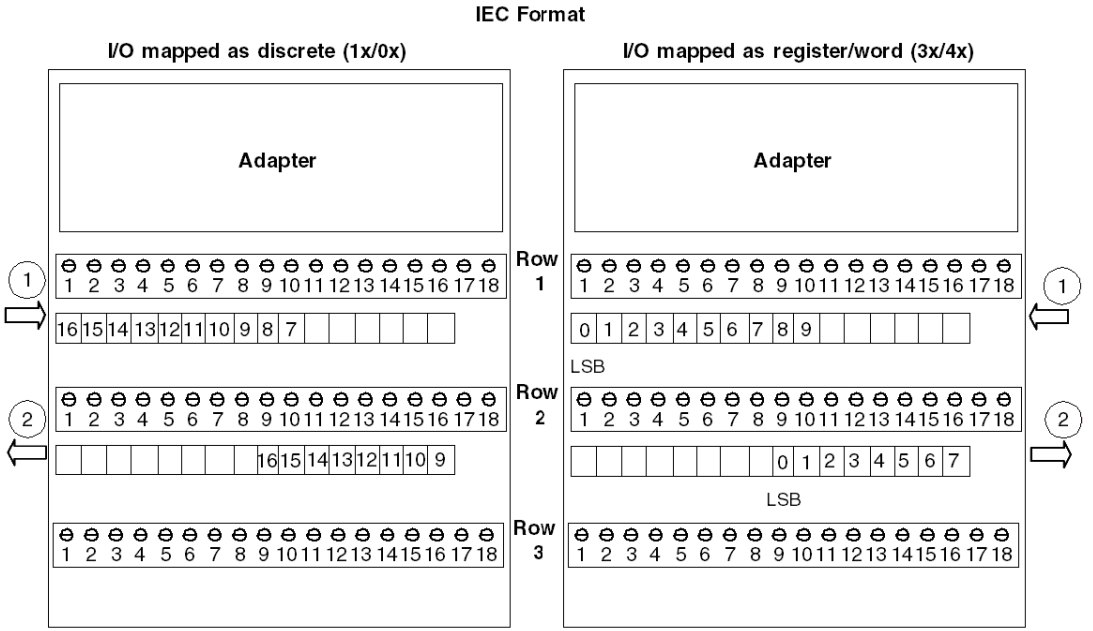

1 inputs
2 outputs

The figure below shows how data is mapped on the I/O base with a Ladder Logic Compliant adapter. When the I/O is mapped as discrete points (1x/0x), the MSB is assigned to Pin 16 and the LSB is assigned to Pin 1. When I/O is mapped as a word or register (3x/4x), the MSB (bit 15) is assigned to Pin 1 and LSB (bit 0) is assigned to Pin 16.

984 Format

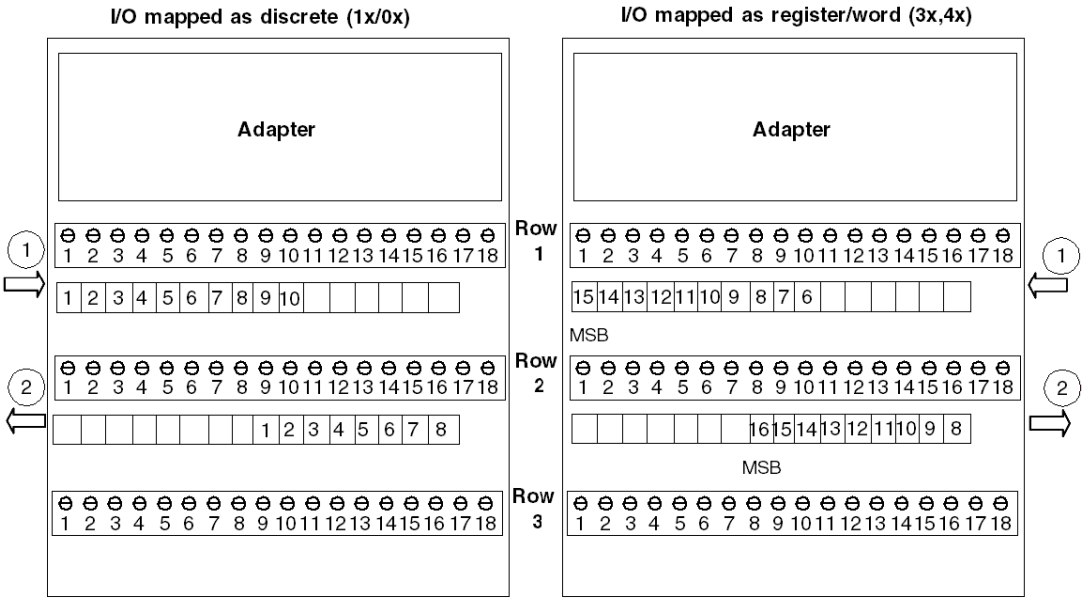

1 inputs
2 outputs

170 ADM 390 31 24 VDC - 10 Pt. In / 8 Pt. Relay Out Module Base

21

Overview

This chapter describes the 170 ADM 390 31 TSX Momentum I/O base.

What's in this Chapter?

This chapter contains the following topics:

Topic	Page
Front Panel Components	326
Specifications	328
Internal Pin Connections	331
Field Wiring Guidelines	332
Wiring Diagrams	334
I/O Mapping	337

Front Panel Components

Overview

This section contains an illustration of the front panel of the 170 ADM 390 31 I/O base and a description of the LEDs.

Front Panel Illustration

The front panel of the I/O base is shown in the illustration below.

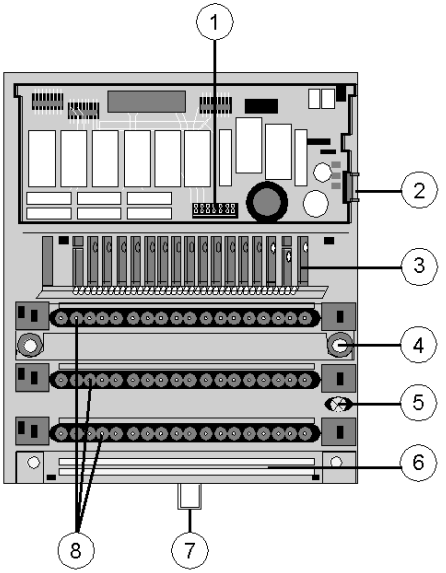

Components of the I/O module

Label	Description
1	Internal interface (ATI) connector
2	Locking and ground contact for the adapter
3	LED status display
4	Mounting holes for panel mount
5	Grounding screw
6	Busbar Mounting Slot
7	Locking tab for DIN rail mount
8	Sockets for the terminal connectors

LED Illustration

The LEDs are shown in the illustration below.

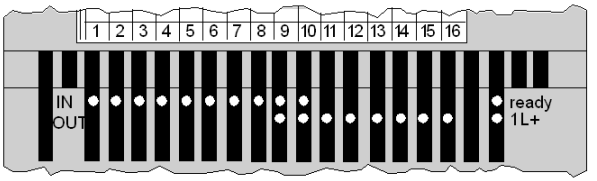

LED Descriptions

The LEDs are described in the table below.

Indicator	Condition	Message
Ready	Green	Module is ready to communicate. Operating voltage for internal logic (5 V) is present.
	Off	Module is not ready.
1L+	Green	Input voltage 1L+ of inputs 1 ... 10 is present
	Off	Input voltage of inputs 1 ... 10 is not present
Upper row IN 1...10	Green	Input status (an LED per input); Input point active, ie. input carries a 1 signal (logically ON)
	Off	Input status (an LED per input); Input point inactive, ie. input carries a 0 signal (logically OFF)
Middle row OUT 9 ...16	Green	Output status (an LED per output); Output point active, ie. output carries a 1 signal (logically ON)
	Off	Output status (an LED per output) Output point inactive, ie. Output carries a 0 signal (logically OFF)

Specifications

Overview

This section contains specifications for the 170 ADM 390 31 I/O base.

General Specifications

Module type	10 discrete inputs in 1 group 8 relay outputs as normally open contacts in 2 groups, 4 pts/group
Supply voltage	24 VDC
Supply voltage range	20...30 VDC
Supply current consumption	max. 250 mA at 24 VDC
Power dissipation	6 W + (# of input points on x .144 W)
I/O map	1 input word 1 output word

Protective Circuit Required

To reduce the effects of radiated noise, you must add snubbing components across inductive load devices. The following table provides generic selection guidelines.

Type of Load	Suppression Device	Minimum Component Rating
DC circuits	a reverse-biased clamping diode across the load	2 A and greater than twice the maximum load voltage

Consult relay and contactor manufacturers' catalogs for commercial suppression devices matched to your particular products.

Isolation

Input to input	none
Output group to output group	1 780 VAC RMS
Input to output	1 780 VAC RMS
Output group to communication adapter	1 780 VAC RMS
Field to communication adapter	Defined by communication adapter type

Fuses

Internal	none
External: operating voltage (L+)	1 A slow-blow (Bussmann GDC-1A or equivalent)
External: input voltage (1L+)	max. 4 A fast-blow (Wickmann 19193-4A or equivalent)
External: output voltage (1L1, 2L1)	According to the supply of the connected actuators– not to exceed 8 A slow-blow/ group.

EMC

Immunity	IEC 1131-2 Surge on auxiliary power supply AC 2 KV to PE, 1 KV to differential surge on auxiliary power supply DC 0.5 KV,
Emissions	EN 50081-2
Agency approvals	UL, CSA, CE, FM Class 1 Div. 2 pending

Physical Dimensions

Width	125 mm (4.9 in)
Depth (with no adapter)	40 mm (1.54 in)
Length	141.5 mm (5.5 in) no or one busbar 159.5mm (6.3 in) two busbars 171.5 mm (6.75 in) three busbars
Weight	260 g (0.57lb)

Discrete Inputs

Number of points	10
Number of groups	1
Signal type	True High
IEC 1131 type	1+ (See Appendix for definitions of IEC input types.)
ON voltage	+11 ... +30 VDC
OFF voltage	-3 ... +5 VDC
Input current	2.5 mA minimum ON (6 mA at 24 VDC) 1.2 mA maximum OFF
Input voltage range	-3 ... +30 VDC
Input resistance	4 kOhm
Response time	2.2 ms OFF to ON 3.3 ms ON to OFF

Relay Outputs

Output type		Relay normally open output
Number of points		8
Number of groups		2
Points per group		4
Current capacity	20 VDC	> 5 mA (but only for new contacts) max 2 A (switching current <= 5 A) ohmic load max 1 A (L/R <= 40 ms) inductive load
	24 VAC	max. 2A (switching current <= 5 A) cos = 1 max. 1 A cos = 0.5
Relay type		Normally Open
Leakage current (output out)		< 1.2 mA @ 230 VAC
Fault sensing		These contacts have an internal suppressor circuit.
Fault reporting		None
Error indication		None
Response time (resistive load / 0.5 A)		10 ms @ 60 Hz OFF to ON 10 ms @ 60 Hz ON to OFF
Maximum switching cycles		> 30 x 106 (mechanical) >=1 x 105 (inductive load with external protective circuitry)

Internal Pin Connections

Overview

This section contains an illustration showing the internal connections between terminals on the I/O base.

Illustration

Rows 1 through 3 show the internal connections between terminalson the I/O base. Row 4 shows the internal connections on the optional busbar.

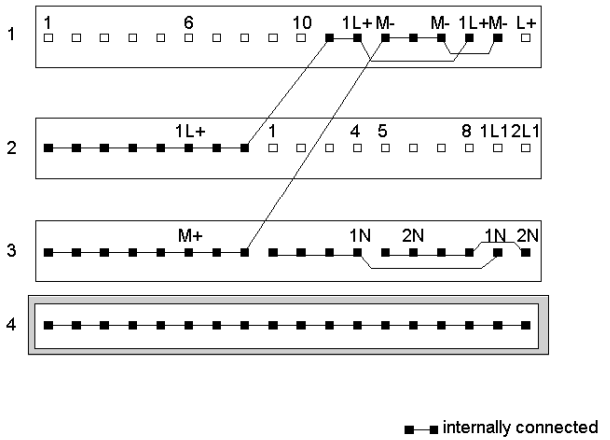

Field Wiring Guidelines

Overview

Inputs are field wired to row 1 of the base. The outputs are field wired to row 2. This section contains wiring guidelines and precautions.

Terminal Connector

To connect field devices to the I/O base, you need a field wiring terminal connector. Schneider Electric sells terminal connectors in sets of three.

Type	Part Number
Screw-in	170 XTS 001 00
Spring-clip	170 XTS 002 00

Busbar May Be Required

Depending on the type of field devices you are using, you may need a 1-row busbar. The following busbars are available from Schneider Electric.

Type	Part Number
Screw-in	170 XTS 006 01
Spring-clip	170 XTS 007 01

Mapping Terminal Blocks

⚠ CAUTION

POTENTIAL FOR SHORT CIRCUITS AND/OR POWER-UP SPIKES

Provide external fuses on the operating voltage to protect the module. Appropriate fuse values are shown in the wiring illustration. An unprotected module may be subject to short circuits and/or power-up spikes.

Failure to follow these instructions can result in injury or equipment damage.

The following table shows mapping terminal blocks and optional busbars.

Row	Terminal	Function
1	1...10	Inputs
	11, 12, 16	Input voltage for terminal pins 1 ... 10, (1L+)
	13, 14, 15	Return (M-) for the inputs
	17	Return (M-) for the module
	18	+ 24 VDC Operating voltage (L+)
2	1 ... 8	Input voltage for pins 1 ... 8, (1L+)
	9 ... 12	Outputs for group 1
	13 ... 16	Outputs for group 2
	17	Output Voltage for relays 1 ... 4 (1L1, 20 ... 24 VDC
	18	Output Voltage for relays 5 ... 8 (2L1, 20 ... 24 VDC
3	1 ... 8	Return (M-) for the inputs
	9, 10, 11, 12	Return (1N) for the relays 1 ... 4
	13, 14, 15, 16	Return (1N) for the relays 5 ... 8
	17/18	Return/Neutral for relay outputs
4	1 ... 18	Protective earth (PE)

Protective Circuit Required

To reduce the effects of radiated noise, you must add snubbing components across inductive load devices. The following table provides generic selection guidelines.

Type of Load	Suppression Device	Minimum Component Rating
DC circuits	a reverse-biased clamping diode across the load	2 A and greater than twice the maximum load voltage

Consult relay and contactor manufacturers' catalogs for commercial suppression devices matched to your particular products.

Wiring Diagrams

Overview

This section provides diagrams to assist you in wiring the following types of devices:

- 3-wire sensor with a 2-wire actuator
- 4-wire sensor with a 3-wire actuator

3-Wire Sensor with a 2-Wire Actuator

The diagram below shows field wiring for a 3-wire (24 VDC) sensor and a 2-wire actuator.

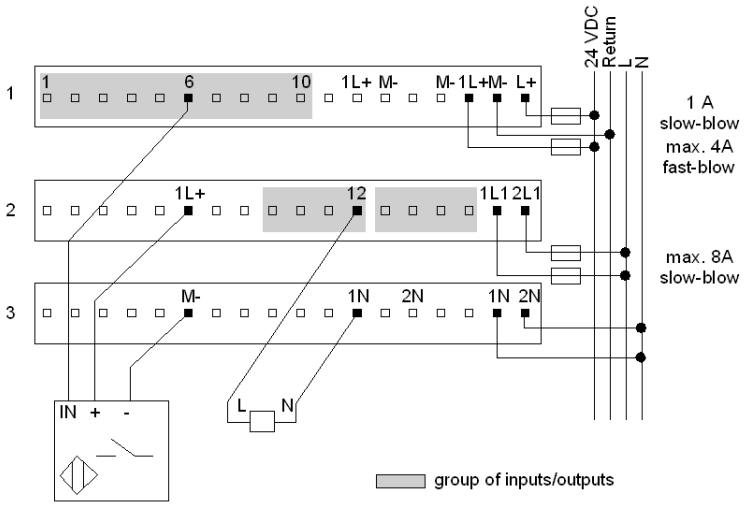

4-Wire Sensor with a 3-Wire Actuator

The diagram below shows field wiring for a 4-wire (24 VDC) sensor and a 3-wire actuator.

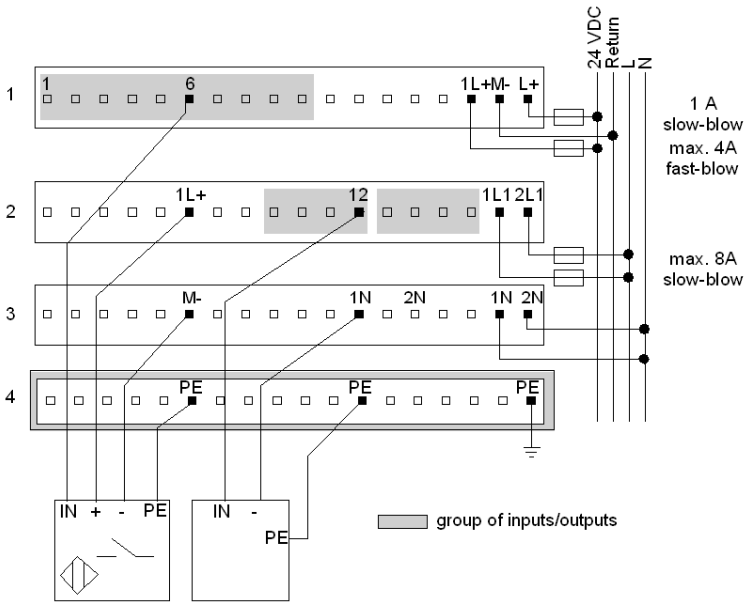

A 1-row busbar is used to provide PE for the 4-wire sensor. No busbar would be required if only 2- and/or 3-wire sensors were used.

Simplified Input Schematics

The following diagram shows the field-side input circuitry.

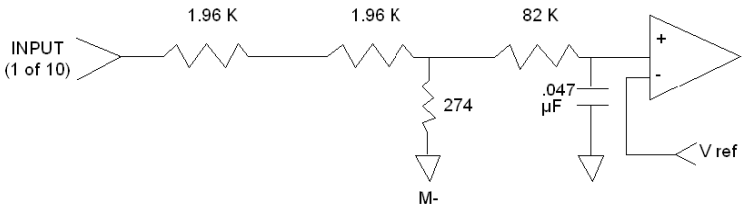

Simplified Output Schematics

The following diagram shows the field-side output circuitry.

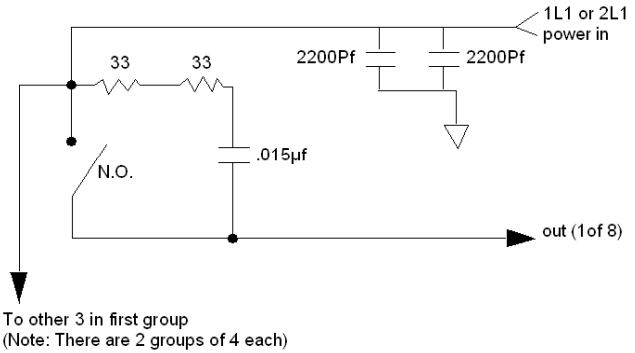

I/O Mapping

Overview

The 170 ADM 390 31 TSX Momentum I/O base supports 10 discrete inputs and 8 discrete outputs. This section contains information about the mapping of the I/O data into input words and output words.

I/O Map

The I/O base may be mapped as one input word and one output word, or as 10 discrete input points and 8 discrete output points.

IEC vs. Ladder Logic

In order to correctly field wire the inputs/outputs and map the input/output data, you need to know which type of Momentum Adapter is mounted on the base.

Adapters may be either IEC compliant or 984 Ladder Logic compliant.

	IEC Compliant	**984 Ladder Logic Compliant**
Momentum Processor Adapters	All	None
Momentum Communication Adapters	All, except 170 NEF 110 21 170 NEF 160 21 170 FNT 110 00 170 FNT 110 01	170 NEF 110 21 170 NEF 160 21 170 FNT 110 00 170 FNT 110 01

Data Mapping

The figure below shows how data is mapped on the I/O base with an IEC Compliant adapter. When the I/O is mapped as discrete points (1x/0x), the MSB is assigned to Pin 1 and the LSB is assigned to Pin 16. When I/O is mapped as a word or register (3x/4x), the MSB (bit 15) is assigned to Pin 16 and LSB (bit 0) is assigned to Pin 1.

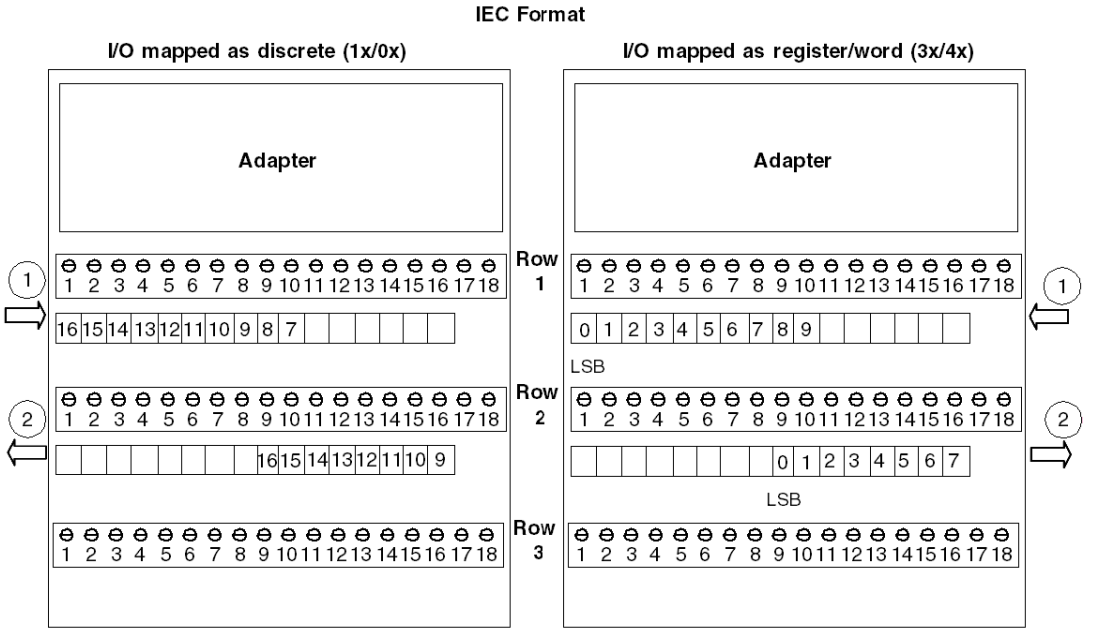

1 inputs
2 outputs

The figure below shows how data is mapped on the I/O base with a Ladder Logic Compliant adapter. When the I/O is mapped as discrete points (1x/0x), the MSB is assigned to Pin 16 and the LSB is assigned to Pin 1. When I/O is mapped as a word or register (3x/4x), the MSB (bit 15) is assigned to Pin 1 and LSB (bit 0) is assigned to Pin 16.

984 Format

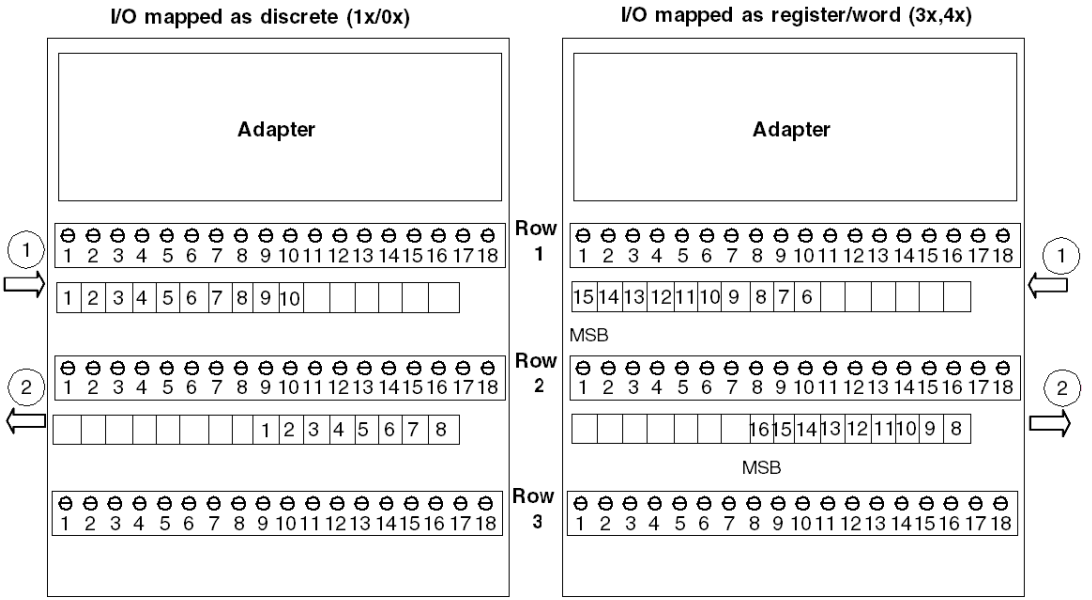

1 inputs
2 outputs

170 ADM 540 80 120 VAC - 6 Pt. In / 3 Pt. Out Discrete MCC Module Base

22

Overview

This chapter describes the 170 ADM 540 80 TSX Momentum I/O base.

What's in this Chapter?

This chapter contains the following topics:

Topic	Page
Front Panel Components	342
Specifications	344
Internal Pin Connections	347
Field Wiring Guidelines	348
Wiring Diagrams	351
I/O Mapping	352
General Modbus Message Rules	354
Output Words	357
Output Words Control Modes	361
Input Words	366
Input Words Control Modes	368

Front Panel Components

Overview

This section contains a photograph of the front panel of the 170 ADM 540 80 I/O base and a description of the LEDs.

Front Panel Illustration

The front panel of the I/O base is shown in the illustration below.

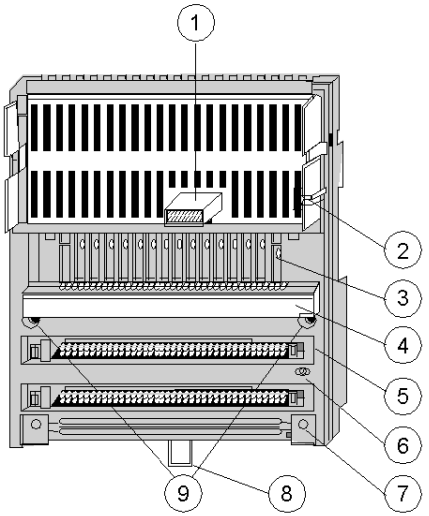

Components of the I/O module

Label	Description
1	Internal interface (ATI) connector
2	Locking and ground contact for the adapter
3	LED status display
4	Protective cover
5	Sockets for the terminal connectors
6	Grounding screw
7	Busbar mounting slot
8	Locking tab for DIN rail mount
9	Mounting holes for panel mount

LED Illustration

The LEDs are shown in the illustration below.

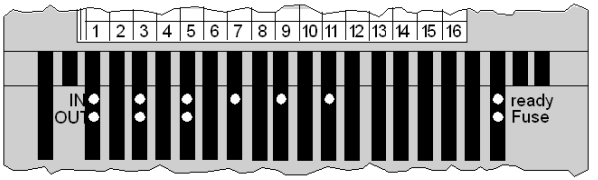

LED Descriptions

The LEDs are described in the table below.

Indicator	Condition	Message
Ready	Green	Module has power.
	Off	Module has no power. Check the L1 voltage source.
FUSE	Green	Output voltage present and fuse 1 (group output) and field power is OK.
	Off	Output voltage not present or fuse 1 or field power is not OK.
IN 1 ... 6	Green	Input status (an LED per input); input point active.
	Off	Input status (an LED per input); input point inactive.
OUT 1 ... 3	Green	Output status (an LED per output); output point active.
	Off	Output status (an LED per output); output point inactive.

Specifications

Overview

This section contains specifications for the 170 ADM 540 80 I/O base.

General Specifications

Module type	6 inputs / 3 outputs, 120VAC
Operating Voltage	120 VAC
Range	85 ... 132 VAC @ 47 ... 63 Hz
Current	125 mA

Isolation

Point to Point	None
I.O points to communication adapter	1250V RMS for one minute
Module field power to communication adapter	1250V RMS for one minute
Module power to I.O field power	1250V RMS for one minute
Field input to field input	1250V RMS for one minute
Modbus Port RS485 to communication adapter	Not isolated

Fuses

Internal (replaceable)	2.5 A slow-blow (Wickmann 195125000 or equivalent)
Internal (non-replaceable)	200 mA slow-blow
External (field power)	2 A slow-blow (Wickmann 195120000 or equivalent)
External (module power)	200 mA slow-blow (Wickmann 195020000 or equivalent)

EMC

Immunity	IEC 1131-2
Emissions	EN 50081-2
Agency Approvals	UL, CSA, CE FM Class 1, Div. 2 pending

Physical Dimensions

Width	125 mm (4.9 in)
Depth (with no adapter)	52 mm (2.05 in)
Length	141.1 mm (5.6 in) no or one busbar 159.5 mm (6.3 in) two busbars 171.5 mm (6.75 in) three busbars
Weight	284 g (10 oz)

Discrete Inputs

Number of Points	6
Number of Groups	1, Non-isolated
Points per Group	6
For range 47 ... 53 Hz	
ON Voltage Off Voltage ON current OFF current	85VAC 20VAC 5.5mA rms 1.9mA rms
For range 57 ... 63 Hz	
ON Voltage Off Voltage ON current OFF current	79VAC 20VAC 5.5mA rms 1.9mA rms
Absolute Maximum Input	132VAC rms continuous
Input Response	1 line cycle maximum ON to OFF, 1 line cycle maximum OFF to ON
Internal Impedance	12k ohms (nominal) @ 60Hz, predominantly capaci tive
Input Protection	Resistor limited

Discrete Outputs

.

Number of Points	3
Number of Groups	1 fuse group
Points per Group	3
Output Voltage	85 ... 120 ... 132 VACVAC @ 47 ... 63 Hz
Surge Voltage	150 VAC for 10 sec 200 VAC for 1 cycle

On State Voltage Drop	1.5 VAC max @ 0.5 A
Output (Load) Current	0.5 A / point, 1.5 A / module
Minimum Output Current	30 mA
Maximum Surge Current (rms)	7.5 A per point, one cycle 5 A per point, two cycles
Output Protection	RC snubber suppression, varistor
Leakage Current	1.9 mA @ 120 VAC
Applied dV / dT	400 V / microseconds
Response Time	0.5 of one line cycle max OFF to ON 0.5 of one line cycle max ON to OFF

Modbus Port

Baud	9600, 19200
Parity	Even, odd or none
Mode/data bits	8 bit RTU, 7 bit ASCII
Stop bit	1 or 2
Modbus Address	0 ... 247
RS485	2 or 4 wire
Timeout	150ms (after transmission, waiting for reception)

Modbus Port Tests

Test	Spec Reference	Conditions/Levels
Radiated	EN61000-4-3	80 ... 1000Mhz, 10V/M
Fast transients	EN61000-4-4	1kV, CM, cap clamp
Surge withstand (transients)	EN61000-4-5	1kV, CM, 42Ω source Z
Electrostatic discharge	EN61000-4-2	8kV, air discharge, 4kV, contact
Conducted RF	ENV61000-4-6	0.15 ... 80Mhz 10 VRMS
Pulsed modulated field	ENV 50140	10V/M

Internal Pin Connections

Overview

This section contains an illustration showing the internal connections between terminals on the I/O base and an optional one-row busbar.

Illustration

Rows 1 through 3 show the internal connections between terminals on the I/O base. Row 4 shows the internal connections on the optional busbar.

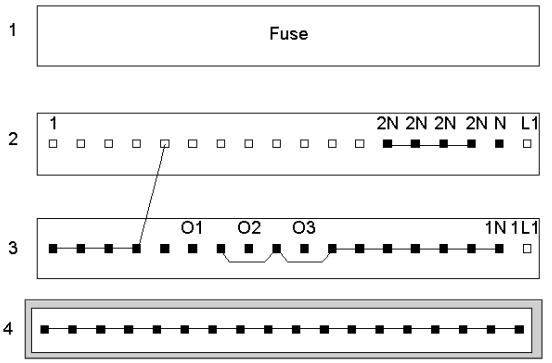

Field Wiring Guidelines

Overview

Inputs are field wired to row 2 of the base. The outputs are field wired to row 3. This section contains wiring guidelines and precautions.

Terminal Connector

To connect field devices to the I/O base, you need a field wiring terminal connector. Schneider Electric sells terminal connectors in sets of three.

Type	Part Number
Screw-in	170 XTS 001 00
Spring-clip	170 XTS 002 00

Busbar May Be Required

Depending on the type of field devices you are using, you may need a 1-row busbar. The following busbars are available from Schneider Electric.

Type	Part Number
Screw-in	170 XTS 006 01
Spring-clip	170 XTS 007 01

Mapping Terminal Blocks

⚠ CAUTION

VOLTAGE SPIKE MAY BE SUFFICIENT TO DAMAGE OR DESTROY MODULE

If an external switch is wired to control an inductive load in parallel with the module output, then an external varistor (Harris V390ZA05 or equivalent) must be wired in parallel with the switch.

Failure to follow these instructions can result in injury or equipment damage.

The following table shows mapping terminal blocks and optional busbars.

Row	Terminal	Connection	
2	1	RxHi	Modbus Master RS485
	2	RxLo	Modbus Master RS485
	3	TxHi	Modbus Master RS485
	4	TxLo	Modbus Master RS485
	5	PE	Earth Ground
	6	-	Not Used
	7 ... 12	I1 ... I6	Inputs 1 ... 6
	13 ... 16	2N	Voltage for input field devices, Neutral
	17	N	Module operating voltage, Neutral
	18	L1	Module operating voltage, Line
3	1 ... 4	PE	Earth Ground
	5	-	Not Used
	6, 8, 10	O1 ... O3	Outputs 1 ... 3
	7, 9, 11 ... 16	1N	Voltage for output field devices, Neutral
	17	1N	Voltage for output field devices, Neutral
	18	1L1	Voltage for field devices, Line
4	18	PE	Earth Ground

NOTE: Rows 4, 5, 6 may be added by mounting a separate terminal block to the I/O base at the grounding busbar slot.

Module RS-485 Termination

The illustration below shows how to properly terminate the module's RS-485 connector. Y-wire terminals with 120 Ohm only at each end of the network.

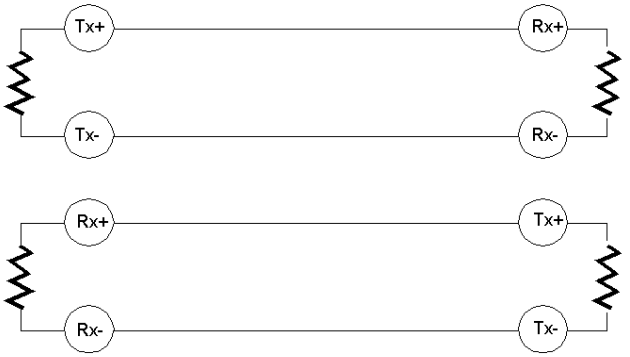

OR: 2 wire the terminals with 120 Ω only at each end of the network.

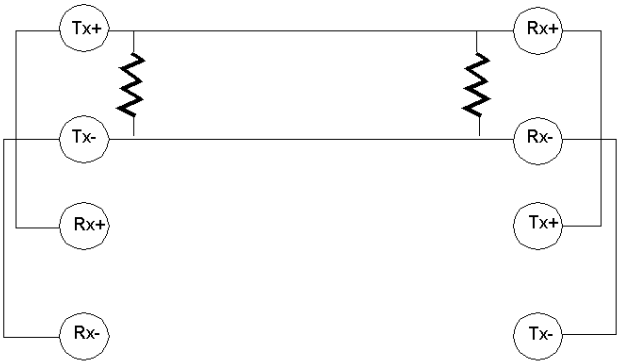

Wiring Diagrams

Overview

This section contains a diagram to assist you in wiring 2-wire field devices.

2-Wire Devices

The diagram below shows an example of wiring for 2-wire devices.

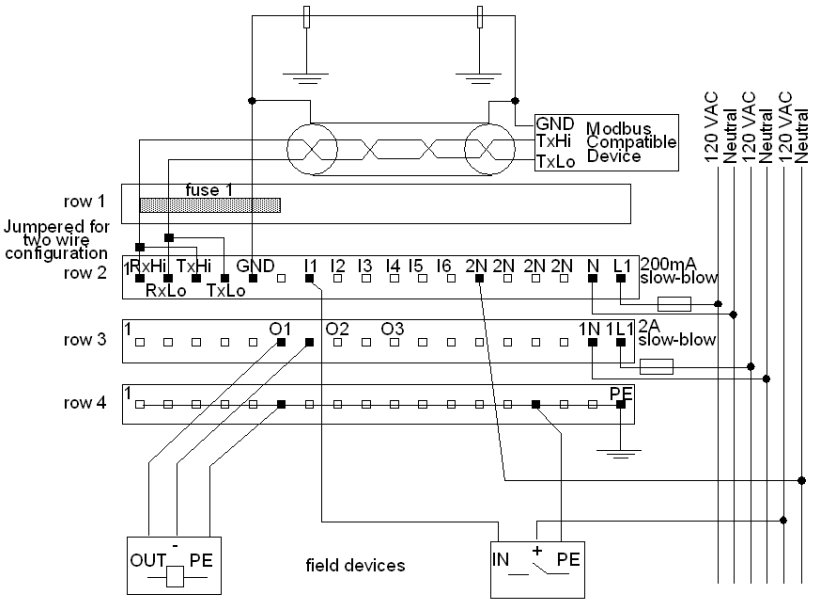

The communication cable should be twisted shielded cable. Tie shield on both ends to earth ground near the associated Modbus equipment.

I/O Mapping

Overview

The 170 ADM 540 80 TSX Momentum I/O base supports 6 discrete inputs and 3 discrete outputs. This section contains information about the mapping of the I/O data into input words and output words.

I/O Map

This module is I/O mapped as 6 input words and 3 output words. The Processor sends 3 bits of discrete output data to the 170 ADM 540 80 base as a single low byte (8-bits), and the base returns 6 input data bits in a single low byte (8-bits) to the processor. The inputs are field wired to row 2, and the outputs are field wired to row 3 of the base.

IEC vs. Ladder Logic

In order to correctly field wire the inputs/outputs and map the input /output data, you need to know which type of Momentum Adapter is mounted on the base.

Adapters are either IEC compliant or 984 Ladder Logic compliant.

	IEC Compliant	**984 Ladder Logic Compliant**
Momentum Processor Adapters	All	None
Momentum Communication Adapters	All, except 170 NEF 110 21 170 NEF 160 21 170 FNT 110 00 170 FNT 110.01	170 NEF 110 21 170 NEF 160 21 170 FNT 110 00 170 FNT 110 01

Data Mapping

The figure below shows how data is mapped.

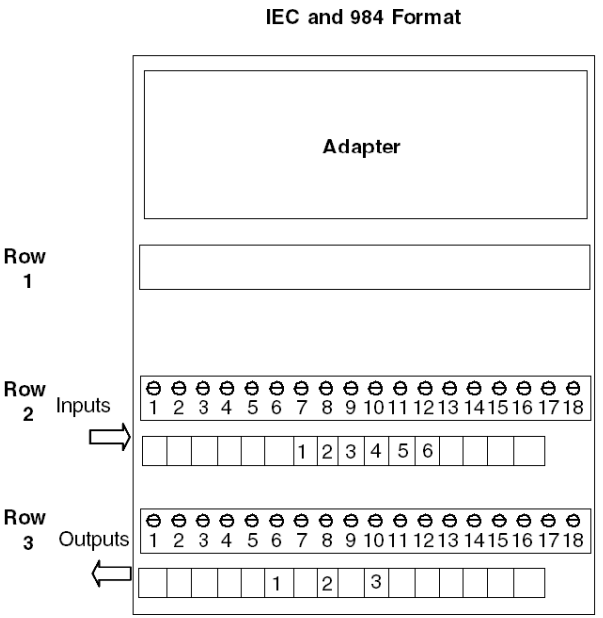

General Modbus Message Rules

Purpose

The following rules state what is expected of the user and what the expected response is.

Sequence Numbe

A change in the sequence number starts any and all Modbus transactions. The I/O module contains the last sequence number written and starts with 0 at power-up. The sequence number is echoed to the input buffer after the Modbus message is complete. Continuous read data can be obtained after the first initial read, by incrementing the sequence number only every scan.

Command and Response

See Output Words Control Modes *(see page 361)* and Input Words Control Modes *(see page 368)*. No more than 4 commands can be requested at any one time (Control Modes 4 ... 8). The response for the requests are returned in the response registers.

Block Read Response

All read commands are contiguous, incrementing up from the starting address to the numbers specified by length.The first read command with a length of zero or a length that is larger than the allocated response buffer will end further Modbus processing and the remainder of the input data field will be zeroed. The first read command starts at the end of the buffer, (words 15 and 16). The first word of the response data is placed in word 5 of the input buffer. After word 5 all read data values fill in consecutively as executed.

Block Write Response

All block write commands (Control Modes 2 and 3) are contiguous, incrementing up from the starting address to the numbers specified by length. Block write commands with a length of zero or a length that is larger than the allocated command buffer will not be executed. However, the read in control mode 3 will be executed regardless of the write command.

Single Write Response

All single write commands (Control Modes 4 ... 8) will be executed. Zero is a legal start address and a legal data value.

Read / Write Commands

All Write commands precede the read response.

Modbus Message Time Out

The Modbus message time out is fixed in the firmware at 200 msec and cannot be altered.

Start Address

Start address of 0 = Modbus register 400001. For example: A Modbus start address of 0 is actually Modbus register 400001. A value of 9 is actually 400010.

Modbus Protocol

For a better understanding of Modbus protocol, refer to PI-MBus-300, Modbus Protocol Reference Guide.

General Modbus Response

The table below lists the possible Modbus response codes.

Response	Code
Illegal function	01 Hex
Illegal data address	02 Hex
Illegal data value	03 Hex
Device failure	04 Hex
Acknowledge	05 Hex
Busy, message rejected	06 Hex
Bad Modbus state Rcv_int	1C Hex
Bad comm state trn_asc	1F Hex
Bad comm state trn_rtu	1D Hex
Bad comm state rcv_asc	20 Hex
Command buffer full error	21 Hex
Bad comm state rcv_rtu	22 Hex
Bad frame type put_chr	23 Hex
Bad transmit comm state	25 Hex
Bad receive comm state	26 Hex
Bad Modbus state tmr0_evt	27 Hex
3 char timeout ASCII mode	28 Hex
No message requested	29 Hex
Bad data length	2A Hex
CRC error	2B Hex
Illegal control mode (> 8)	2C Hex

Response	Code
Control mode 0 failed	30 Hex
Control mode 1 failed	31 Hex
Control mode 2 failed	32 Hex
Control mode 3 failed	33 Hex
Control mode 4 failed	34 Hex
Control mode 5 failed	35 Hex
Control mode 6 failed	36 Hex
Control mode 7 failed	37 Hex
Control mode 8 failed	38 Hex
Message Mismatch	50 Hex
Message accepted	55 Hex

Output Words

Output Words 4x ... 4x + 15

16 words of output data are used for 3 120VAC output points and commands for the Modbus master device.

The following table shows the function of the output words.

Output Words		
Word 1	Sequence #	
Word 2	Output configuration	AC output
Word 3	Control mode	
Word 4	Port configuration	Slave Node
Word 5 ... 16	Message data field	

Depending on how the application is written, moving a block of data to the registers, which includes a change in the sequence number, is acceptable.

Output Word 1

⚠ CAUTION

INVALID DATA - OUTPUT SHUT DOWN

Do not use a zero value in word one, which will cause an output shut down state.

Failure to follow these instructions can result in injury or equipment damage.

- Valid settings are 1 ... FFFF.
- The module defaults to zero at power-up (module shut down).
- Whenever the module is set to zero, it goes to the module shut down state.
- When the value in the first output word is not equal to the first input word, then a Modbus message will be sent.. When they are equal, there will be no message activity.
- A change in the sequence word value starts the Modbus command execution. It is your responsibility to change the output data for the Modbus message. The sequence number must be the last word of information written in order to ensure Modbus messages are correctly handled.

Module Shut Down Definition

The Module shut down behaviour may be set to:

- hold last value
  - or -
- user defined
  - or -
- minimum output (OFF)

NOTE: When the sequence number is 1 ... FFFF, the 120 VAC output and input data are collected every scan and are not affected by the sequence number. A sequence number of zero causes shutdown status, but inputs continue to be updated.

Output Word 2

Output word 2 contains 3 bits of 120 VAC discrete output data, 3 bits of user defined output data shut down values, and 2 bits for user shut down state.

Word 2 High Byte (Shut down states)	
Bit 15	0= Shut down state minimum output 1= Check bit 14 for shut down state
Bit 14	0= Hold last value (shut down state) 1= User defined (shut down state)
Bit 13 ... 11	Not used
Bit 10	User defined value for output 3 (shut down)
Bit 9	User defined value for output 2 (shut down)
Bit 8	User defined value for output 1 (shut down)

Word 2 Low Byte (120 VAC output data)	
Bit 7 ... 3	Not used
Bit 2	Output 3
Bit 1	Output 2
Bit 0	Output 1

Output Word 3

Output word 3 contains the Modbus message control mode.

Word 3 Control Modes			
Mode	Value	Function	Description
Mode 0	0	Idle	No Modbus activity. Input buffer to zero
Mode 1	1	Modbus message	The I/O module executes the data field from a user-defined Modbus message
Mode 2	2	Block write	The I/O module performs a block write command (Modbus function code 16)
Mode 3	3	Block write and Block read	The I/O module performs mode 2 plus a block read command
Mode 4	4	4 single writes	The I/O module performs 4 Modbus function code 06 commands (single writes)
Mode 5	5	3 single writes and 1 block read	The I/O module performs 3 Modbus function code 06 commands (single writes) and Modbus function code 03 (1 block read command)
Mode 6	6	2 single writes and 2 block reads	The I/O module performs 2 Modbus function code 06 commands (single writes) and Modbus function code 03 (2 block read commands)
Mode 7	7	1 single writes and 3 block reads	The I/O module performs 1 Modbus function code 06 commands (single writes) and Modbus function code 03 (3 block read commands)
Mode 8	8	4 block reads	The I/O module performs Modbus function code 03 (4 block read commands)
Others	-	Illegal command	Response = illegal control mode

Output Word 4

Output word 4 contains the port configuration parameters (high byte) and the Modbus slave address (low byte).

Word 4 - Port Configuration	
High Byte	
Bit 15	0= 1 stop bit 1= 2 stop bits
Bit 14	0= 7 data bits 1= 8 data bits
Bit 13	0= no parity 1= parity enabled
Bit 12	0= odd parity 1= even parity
Bits 11 ... 8	0010= 19.2 baud others= 9600 baud
Low Byte	
Bits 7 ... 1	Modbus slave node address

Output Words Control Modes

Purpose

This section describes output words 5 ... 16 control modes.

Output Words 5 ... 16

Output words 5 ... 16 are used as data for specific control modes.

NOTE: Be sure you read General Modbus Message Rules *(see page 354)*.

Output Words Mode Memory Allocation

Output word modes are used for message data. The table below describes the specific memory allocation for each control mode.

Control Mode 0

Control Mode 0 - Idle, Clear Response Buffer

Word 1	Sequence #	
Word 2	Output Configuration	Output
Word 3	**Control Mode 0**	
Word 4	Port Configuration	Slave node address
Words 5 ... 16	**Not used**	

Control Mode 1

Control Mode 1 - Modbus Message

Word 1	Sequence #	
Word 2	Output Configuration	Output
Word 3	**Control Mode 1**	
Word 4	Port Configuration	**Message length**
Words 5 ... 16	**12 words of message output data**	

Control Mode 2

Control Mode 2 - Block Write

Word 1	Sequence #	
Word 2	Output Configuration	Output
Word 3	**Control Mode 2**	
Word 4	Port Configuration	Slave node address
Word 5	**Start address - value of 0 = 400001**	
Word 6	**Number of data words, 1 ... 10 are valid**	
Words 7 ... 16	**10 words of message output data**	

Control Mode 3

Control Mode 3 - 1 Block Write And 1 Block Read Command

Word 1	Sequence #	
Word 2	Output Configuration	Output
Word 3	**Control Mode 3**	
Word 4	Port Configuration	Slave node address
Word 5	**First write command address - value of 0 = 400001**	
Word 6	**Number of data words, 1 ... 8 are valid**	
Words 7 ... 14	**8 words of message output data**	
Word 15	**First read command address**	
Word 16	**Number of data words to read, 1 ... 12 are valid**	

Control Mode 4

Control Mode 4 - 4 Single Write Commands

Word 1	Sequence #	
Word 2	Output Configuration	Output
Word 3	**Control Mode 4**	
Word 4	Port Configuration	Slave node address
Word 5	**First single write command address - value of 0 = 400001**	
Word 6	**1 word of message output data**	
Word 7	**Second single write command address - value of 0 = 400001**	
Word 8	**1 word of message output data**	
Word 9	**Third single write command address - value of 0 = 400001**	
Word 10	**1 word of message output data**	
Word 11	**Fourth single write command address - value of 0 = 400001**	
Word 12	**1 word of message output data**	
Words 13 ... 16	**Not used**	

Control Mode 5

Control Mode 5 - 3 Single Writes and 1 Block Read Command

Word 1	Sequence #	
Word 2	Output Configuration	Output
Word 3	**Control Mode 5**	
Word 4	Port Configuration	Slave node address
Word 5	**First single write command address - value of 0 = 400001**	
Word 6	**1 word of message output data**	
Word 7	**Second single write command address - value of 0 = 400001**	
Word 8	**1 word of message output data**	
Word 9	**Third single write command address - value of 0 = 400001**	
Word 10	**1 word of message output data**	
Words 11 ... 14	**Not used**	
Word 15	**First block read command address**	
Word 16	**Number of data words to read, 1 ... 12 are valid**	

Control Mode 6

Control Mode 6 - 2 Single Writes And 2 Block Read Commands

Word 1	Sequence #	
Word 2	Output Configuration	Output
Word 3	**Control Mode 6**	
Word 4	Port Configuration	Slave node address
Word 5	**First single write command address - value of 0 = 400001**	
Word 6	**1 word of message output data**	
Word 7	**Second single write command address - value of 0 = 400001**	
Word 8	**1 word of message output data**	
Words 9 ... 12	**Not used**	
Word 13	**Second block read command address**	
Word 14	**Number of data words to read**	
Word 15	**First block read command address**	
Word 16	**Number of data words to read**	

NOTE: With control mode 6, words 14 and 16 combined length must be 1 ... 12.

Control Mode 7

Control Mode 7 - 1 Write And 3 Block Read Commands

Word 1	Sequence #	
Word 2	Output Configuration	Output
Word 3	**Control Mode 7**	
Word 4	Port Configuration	Slave node address
Word 5	**First single write command address - value of 0 = 400001**	
Word 6	**1 word of message output data**	
Words 7 ... 10	**Not used**	
Word 11	**Third block read command address**	
Word 12	**Number of data words to read**	
Word 13	**Second block read command address**	
Word 14	**Number of data words to read**	
Word 15	**First block read command address**	
Word 16	**Number of data words to read**	

NOTE: With control mode 7, words 14 and 16 combined length must be 1 ... 12.

Control Mode 8

Control Mode 8 - 4 Block Read Commands

Word 1	Sequence #	
Word 2	Output Configuration	Output
Word 3	**Control Mode 8- 4 block read commands**	
Word 4	Port Configuration	Slave node address
Words 5 ... 8	**Not used**	
Word 9	**Fourth block read command address**	
Word 10	**Number of data words to read**	
Word 11	**Third block read command address**	
Word 12	**Number of data words to read**	
Word 13	**Second block read command address**	
Word 14	**Number of data words to read**	
Word 15	**First block read command address**	
Word 16	**Number of data words to read**	

NOTE: With control mode 8, words 10, 14 and 16 combined length must be 1 ... 12.

Input Words

Purpose

This section describes input words.

Input Words 3x ... 3x + 15

16 words of input data are used for 6 120VAC input points and the Modbus master response buffer.

Input Words Control Mode 1

Word 1	Sequence #	
Word 2	Status	AC input
Word 3 ... 16	Message response data field	

Input Words Control Modes 2 ... 8

Word 1	Sequence #	
Word 2	Status	AC input
Word 3	Message 1 response	Message 2 response
Word 4	Message 3 response	Message 4 response
Word 5 ... 16	Message response data field	

Input Word 1

Input word 1 contains an echo of the sequence number.

- Valid settings are 1 ... FFFF
- Whenever the module is set to zero, it goes to the module shut down state.
- When the value in the first input word is not equal to the output word then a Modbus message will be sent. If not, when they are equal, there will be no message activity.
- A change in the sequence word value starts the Modbus command execution. It is your responsibility to change the output data for the Modbus message. The sequence number must be the last word of information written in order to ensure Modbus messages are correctly handled.

Input Word 2

Input word 2 contains 6 bits of 120 VAC input data and 8 bits for module status.

Input Word 1 High Byte (Status).

Bit 15 (MSB)	0= message processing done 1= message in process
Bit 14	Copy of output 3
Bit 13	Copy of output 2
Bit 12	Copy of output 1
Bit 11	Not used
Bit 9	1= fuse ok 0= fuse blown
Bit 8	1= module healthy 0= module not healthy

Input Word 1 Low Byte (Input Data Values).

Bit 7 ... 6	Not used
Bit 5	Input 6
Bit 4	Input 5
Bit 3	Input 4
Bit 2	Input 3
Bit 1	Input 2
Bit 0 (LSB)	Input 1

Input Words Control Modes

Purpose

This section describes input words control modes.

Input Words 3 ... 4

NOTE: In control mode 0, input words 3 and 4 are zeroed.

NOTE: The message response code is contained in the Modbus message itself, so control mode 1, input buffer words 3 ... 16 are used as the actual message.

NOTE: For control modes 2 ... 8, all four response fields are present whether used or not. The table below shows the input message responses to words 3 and 4.

Control Modes 2 ... 8

Input Word 3 High Byte	**Input Word 3 Low Byte**
Message 1 response	Message 2 response
Input Word 4 High Byte	**Input Word 4 Low Byte**
Message 3 response	Message 4 response

Input Words 5 ... 16

Input words 5 ... 16 contain Modbus message response data.

NOTE: Refer to *General Modbus Message Rules, page 354*.

Input Words Mode Memory Allocation

The tables below describe the specific memory allocation for each control mode.

Control Mode 0

Control Mode 0 - Idle, Clear Response Buffer

Word 1	Sequence #	
Word 2	Status	6 120Vac inputs
Word 3 ... 16	**Message data field = (00) hex**	

Control Mode 1

Control Mode 1 - Modbus Message

Word 1	Sequence #	
Word 2	Status	6 120Vac inputs
Word 3 ... 16	**Modbus Message data response**	

Control Mode 2 and 4

Control Mode 2 and 4 - Write Commands

Word 1	Sequence #	
Word 2	Status	6 120Vac inputs
Word 3	Message 1 response	Message 2 response
Word 4	Message 3 response	Message 4 response
Word 5 ... 16	**Not used. Input data values are 0**	

Control Mode 3 and 5

Control Mode 3 and 5 - 1 Write Command and 1 Block Read Command

Word 1	Sequence #	
Word 2	Status	6 120Vac inputs
Word 3	Message 1 response	Message 2 response
Word 4	Message 3 response	Message 4 response
Word 5 ... 16	**12 words of message input data**	

Control Mode 6

Control Mode 6 - 2 Single Write Commands and 2 Block Read Commands

Word 1	Sequence #	
Word 2	Status	6 120Vac inputs
Word 3	Message 1 response	Message 2 response
Word 4	Message 3 response	Message 4 response
Word 5 ... 16	**12 words shared between 2 input responses**	

Control Mode 7

Control Mode 7 - 1 Write Command and 3 Block Read Commands

Word 1	Sequence #	
Word 2	Status	6 120Vac inputs
Word 3	Message 1 response	Message 2 response
Word 4	Message 3 response	Message 4 response
Word 5 ... 16	**12 words shared between 3 input responses**	

Control Mode 8

Control Mode 8 - 4 Block Read Commands

Word 1	Sequence #	
Word 2	Status	6 120Vac inputs
Word 3	Message 1 response	Message 2 response
Word 4	Message 3 response	Message 4 response
Word 5 ... 16	**12 words shared between 4 input responses**	

170 ADM 690 50 120 VAC - 10 Pt. In / 8 Pt. Out Module Bases

23

Overview

This chapter describes the 170 ADM 690 50 TSX Momentum I/O base.

What's in this Chapter?

This chapter contains the following topics:

Topic	Page
Front Panel Components	372
Specifications	374
Internal Pin Connections	377
Field Wiring Guidelines	378
Wiring Diagrams	380
I/O Mapping	383

Front Panel Components

Overview

This section contains an illustration of the front panel of the 170 ADM 690 50 I/O base and a description of the LEDs.

Front Panel Illustration

The front panel of the I/O base is shown in the illustration below.

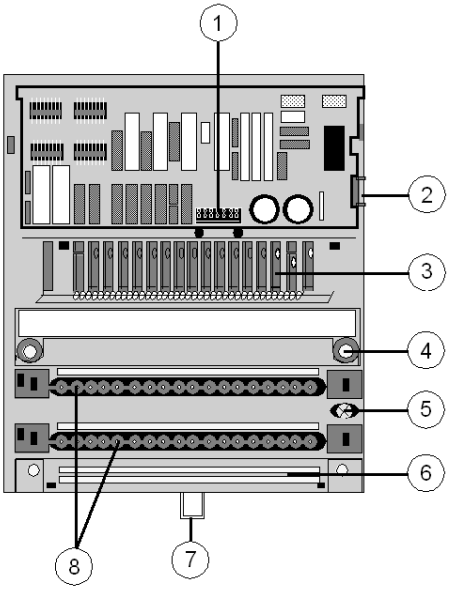

Components of the I/O module

Label	Description
1	Internal interface (ATI) connector
2	Locking and ground contact for the adapter
3	LED status display
4	Mounting holes for panel mount
5	Grounding screw
6	Busbar Mounting Slot
7	Locking tab for DIN rail mount
8	Sockets for the terminal connectors

LED Illustration

TheLEDs are shown in the illustration below.

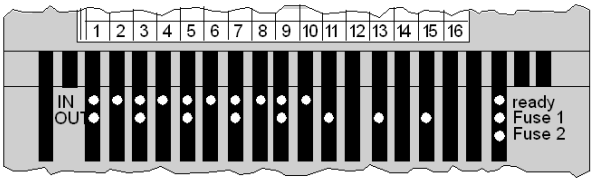

LED Descriptions

The LEDs are described in the table below.

Indicator	Condition	Message
Ready	Green	Module is ready to communicate. Operating voltage for internal logic (5 V) is present.
	Off	Module not ready.
FUSE 1	Green	Output voltage of outputs 1 ... 4 (one common output voltage for group 1) present and fuse 1 is OK.
	Off	Output voltage of outputs 1 ... 4 (one common output voltage for group 1) is not present and/or fuse 1 is defective
FUSE 2	Green	Output voltage of outputs 5 ... 8 (one common output voltage for group 2) present and fuse 1 is OK.
	Off	Output voltage of outputs 5 ... 8 (one common output voltage for group 2) is not present and/or fuse 1 is defective
Upper row IN 1...10	Green	Input status (an LED per input); Input point active, ie. input carries a 1 signal (logically ON)
	Off	Input status (an LED per input); Input point inactive, ie. input carries a 0 signal (logically OFF)
Middle row OUT 1,3 ,5 ,7 , 9, 11, 13, 15	Green	Output status (an LED per output); Output point active, ie. output carries a 1 signal (logically ON)
	Off	Output status (an LED per output) Output point inactive, ie. Output carries a 0 signal (logically OFF)

Specifications

Overview

This section contains specifications for the 170 ADM 690 50 I/O base.

General Specifications

Module type	10 discrete inputs in 1 group 8 triac outputs in 1 group (in 2 fuse groups)
Supply voltage	120 VAC
Supply voltage range	100 ... 132 VAC @ 47...63Hz
Supply current consumption	max. 160 mA at 120 VAC
Power dissipation	6 W + ((# of input points on x .144 W) + (# of output points on x .75 W))
I/O map	1 input word 1 output word

Isolation

Input to input	none
Output group to output group	none
Input to output group	125 VAC, tested with 1780 VAC
Field to communication adapter	125 VAC, tested with 1780 VAC

Fuses

Internal	Wickman 19195-2.5 ANote If you replace this fuse, you must use a Ferraz type W 020547 (UL listed).
External: operating voltage (L1)	315 mA fast-blow, 250 V
External: input voltage (2L1)	max. 4 A fast-blow, 250 V
External: output voltage (1L1)	According to the supply of the connected actuators–not to exceed 8 A slow-blow

EMC

Immunity	IEC 1131-2 Surge on auxiliary power supply 2 KV to PE, 1 KV to differential
Emissions	EN 50081-2
Agency approvals	UL, CSA, CE, FM Class 1 Div. 2

Physical Dimensions

Width	125 mm (4.9 in)
Depth (with no adapter)	40 mm (1.54 in)
Length	141.5 mm (5.5 in) no or one busbar 159.5mm (6.3in) two busbars 171.5 mm (6.75in) three busbars
Weight	220 g (0.49 lb)

Discrete Inputs

Number of points	10
Number of groups	1
Signal type	120 VAC
IEC 1131 type	2 (See Appendix *IEC 1131 Input Types, page 673* for definitions of IEC input types.)
ON voltage	74 AC
OFF voltage	20 AC
Input current	6 mA minimum ON 2.6 mA maximum OFF
Input voltage range	74 ... 132 VAC
Input resistance	4 kOhm
Response time	max. 1/2 x 1/f ms OFF to ON max. 1/2 x 1/f ms ON to OFF

Discrete Outputs

Output type	Triac
Output supply voltage	120 AC
Output supply voltage range	100 ... 132 VAC
Output voltage	External supply - 1.5 VAC
Number of points	8
Number of groups	1
Points per group	8, but 2 fuses
Current capacity	0.5 A/point maximum, 30 mA/point minimum 2 A/group 4 A/module
Signal type	True High
Leakage current (output out)	< 1.3 mA @120 VAC
On state voltage drop	< 1.5 VAC @ 0.5 A
Fault sensing	One common voltage supply for output 1 .. 4 and output 5 ... 8, each is protected by an internal fuse against short-circuits (but not against overload). Each output is provided with an RC network (normal mode noise voltage rejection) and a Varistor (surge protection).
Fault reporting	none
Error indication	none
Response time (resistive load / 0.5 A)	max. 1/2 x 1/f ms OFF to ON max. 1/2 x 1/f ms ON to OFF
Maximum switching cycles	3000/h for 0.5 A inductive load

Internal Pin Connections

Overview

This section contains an illustration showing the internal connections between terminals on the I/O base and an optional busbar.

Illustration

Rows 1 through 3 show the internal connections between terminals on the I/O base. Row 4 through 6 show the internal connections on the optional busbar.

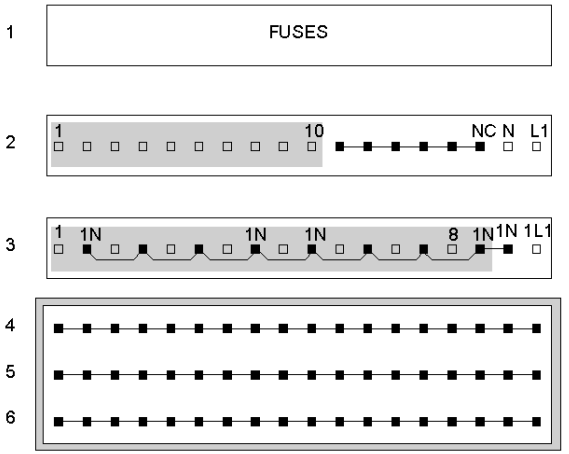

Field Wiring Guidelines

Overview

Inputs are field wired to row 2 of the I/O base. Outputs are field wired to row 3. This section contains wiring guidelines and precautions for wiring the 170 ADM 690 50 TSX Momentum I/O base.

Terminal Connector

To connect field devices to the I/O base, you need a field wiring terminal connector. Schneider Electric sells terminal connectors in sets of three.

Type	Part Number
Screw-in	170 XTS 001 00
Spring-clip	170 XTS 002 00

Busbar May Be Required

Depending on the type of field devices you are using, you may need a 1-, 2-, or 3-row busbar. The following busbars are available from Schneider Electric.

Type	Number of Rows	Part Number
Screw-in	1 - row	170 XTS 006 01
	2 - row	170 XTS 005 01
	3 - row	170 XTS 004 01
Spring-clip	1 - row	170 XTS 007 01
	2 - row	170 XTS 008 01
	3 - row	170 XTS 003 01

Mapping Terminal Blocks

⚠ CAUTION

POTENTIAL FOR SHORT CIRCUITS AND/OR POWER-UP SPIKES

Provide external fuses on the operating voltage to protect the module. Appropriate fuse values are shown in the wiring illustration. An unprotected module may be subject to short circuits and/or power-up spikes.

Failure to follow these instructions can result in injury or equipment damage.

The following table shows mapping terminal blocks and optional busbars.

Row	Terminal	Function
1	FUSE 1, FUSE 2	Internal fuses for output voltages
2	1 ... 10	Inputs
	11 ... 16	Connected internally within the row, for general purpose use
	17	Return (N)
	18	120 VAC Operating voltage (L1)
3	1, 3, 5, 7, 9, 11, 13, 15	Outputs
	2, 4, 6, 8, 10, 12, 14, 16	Return (1N) for the actuators
	17	Return for the output voltage
	18	20 ... 132 VAC Output voltage for terminal pins 1 ... 8 (1L1)
4	1 ... 18	120 VAC Input voltage (2L1)
5	1 ... 18	Return (2N) for sensors
6	1 ... 18	Protective earth (PE)

Wiring Diagrams

Overview

This section provides diagrams to assist you in wiring the following types of devices:

- 2-wire sensor with a 2-wire actuator
- 4-wire sensor with a 3-wire actuator

2-Wire Sensor with a 2-Wire Actuator

The diagram below shows field wiring for a 2-wire sensor and a 2-wire actuator.

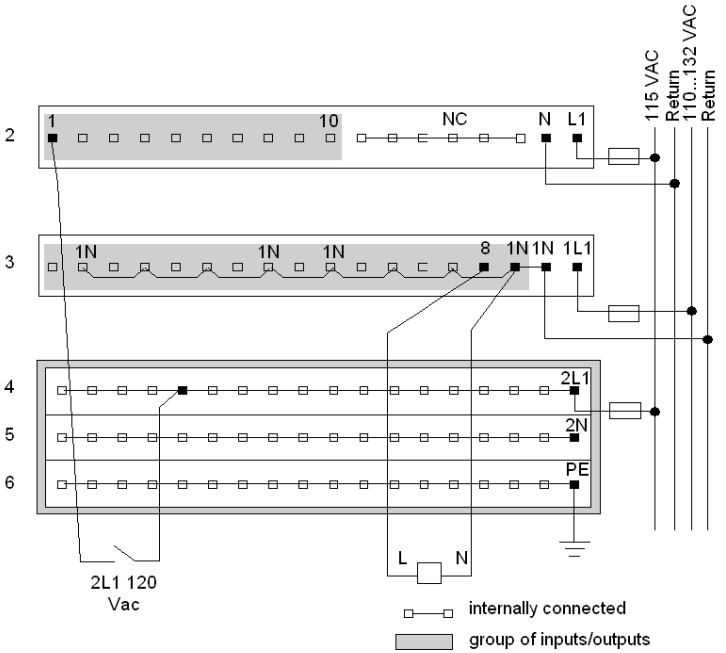

4-Wire Sensor with a 3-Wire Actuator

The diagram below shows field wiring for a 4-wire sensor and a 3-wire actuator. When using 3-phase current for supply L1, 1L1 and 2L1 must come from one phase.

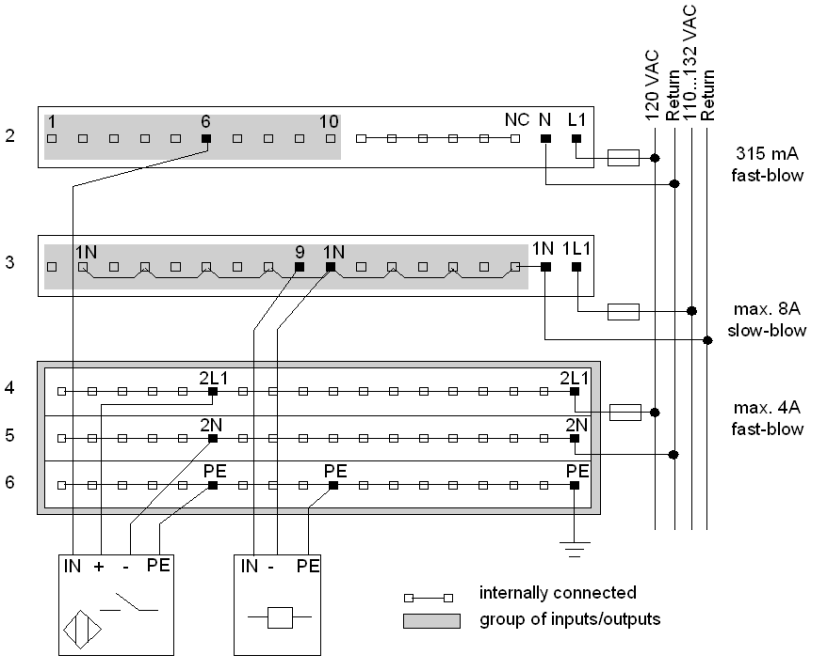

Simplified Input Schematics

The following diagram shows the field-side input circuitry.

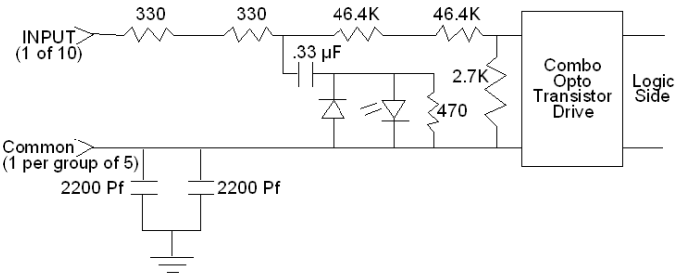

Simplified Output Schematics

The following diagram shows the field-side output circuitry.

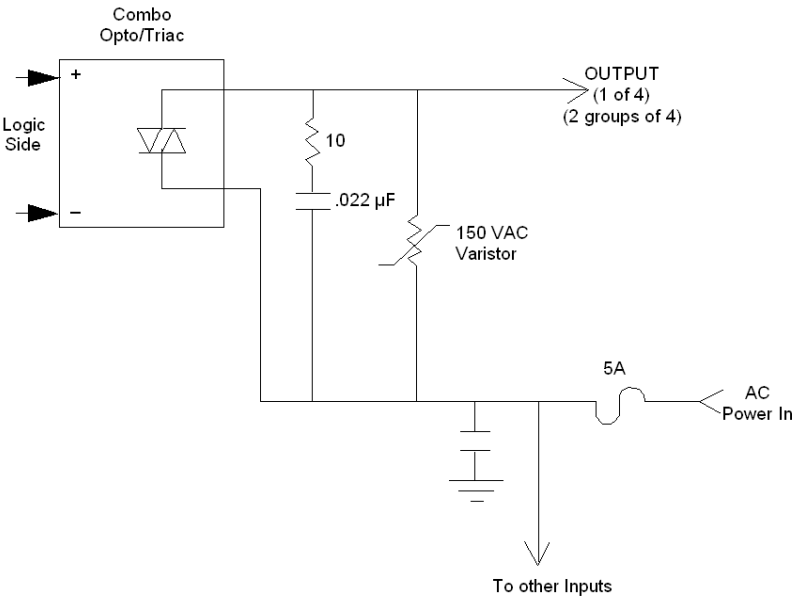

I/O Mapping

Overview

The 170 ADM 690 50 TSX Momentum I/O base supports 10 discrete inputs and 8 discrete outputs. This section contains information about the mapping of the I/O data into input words and output words.

I/O Map

The I/O base may be mapped as one input word and one output word, or as 10 discrete input points and 8 discrete output points.

IEC vs. Ladder Logic

In order to correctly field wire the inputs/outputs and map the input /output data, you need to know which type of Momentum Adapter is mounted on the base.

Adapters may be either IEC compliant or 984 Ladder Logic compliant.

	IEC Compliant	**984 Ladder Logic Compliant**
Momentum Processor Adapters	All	None
Momentum Communication Adapters	All, except 170 NEF 110 21 170 NEF 160 21 170 FNT 110 00 170 FNT 110 01	170 NEF 110 21 170 NEF 160 21 170 FNT 110 00 170 FNT 110 01

Data Mapping

The figure below shows how data is mapped on the I/O base with an IEC Compliant adapter. When the I/O is mapped as discrete points (1x/0x), the MSB is assigned to Pin1 and the LSB is assigned to Pin 16. When the I/O is mapped as a word or register (3x/4x), the MSB (bit 15) is assigned to Pin 16 and the LSB (bit 0) is assigned to Pin 1.

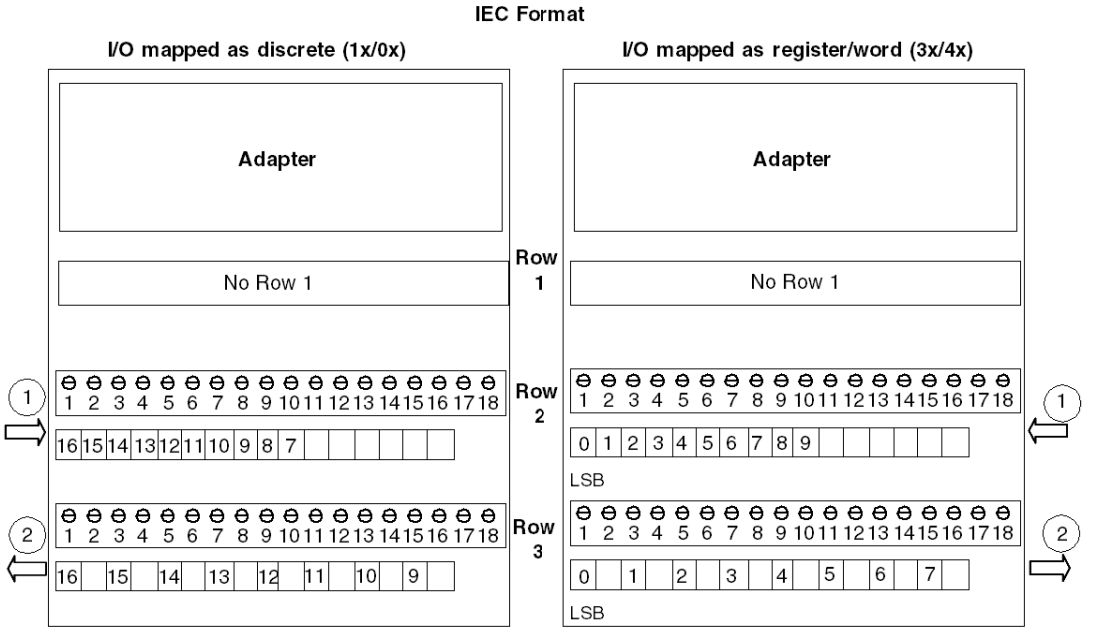

1 inputs
2 outputs

The figure below shows how data is mapped on the I/O base with a Ladder Logic Compliant adapter. When the I/O is mapped as discrete points (1x/0x), the MSB is assigned to Pin16 and the LSB is assigned to Pin 1. When the I/O is mapped as a word or register (3x/4x), the MSB (bit 15) is assigned to Pin 1 and the LSB (bit 0) is assigned to Pin 16.

984 Format

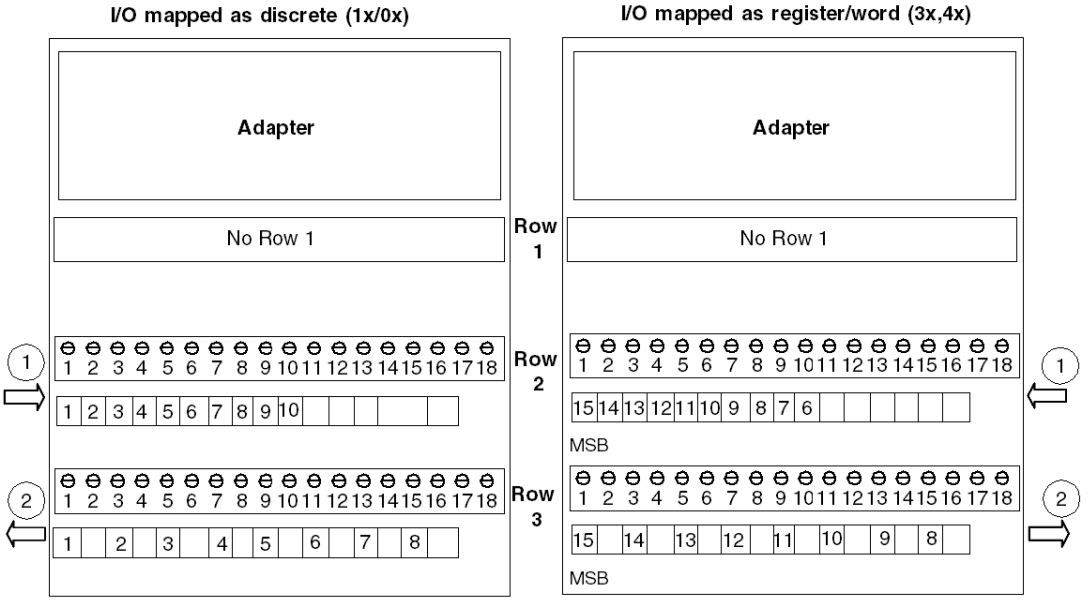

1 inputs
2 outputs

170 ADM 690 51 120 VAC - 10 Pt. In / 8 Pt. Out Module Bases

24

Overview

This chapter describes the 170 ADM 690 51 TSX Momentum I/O base.

What's in this Chapter?

This chapter contains the following topics:

Topic	Page
Front Panel Components	388
Specifications	390
Internal Pin Connections	393
Field Wiring Guidelines	394
Wiring Diagrams	396
I/O Mapping	400

Front Panel Components

Overview

This section contains an illustration of the front panel of the 170 ADM 690 51 I/O base and a description of the LEDs.

Front Panel Illustration

The front panel of the I/O base is shown in the illustration below.

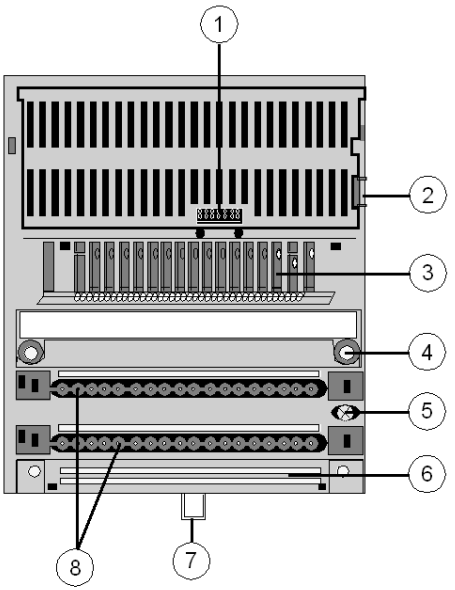

Components of the I/O module

Label	Description
1	internal interface (ATI) connector
2	locking and ground contact for the adapter
3	LED status display
4	mounting holes for panel mount
5	grounding screw
6	busbar mounting slot
7	locking tab for DIN rail mount
8	sockets for the terminal connectors

LED Illustration

TheLEDs are shown in the illustration below.

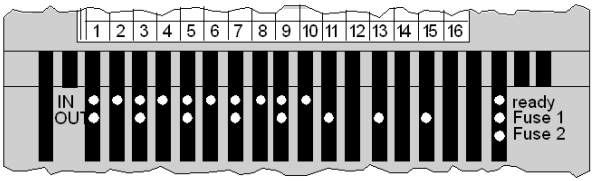

LED Descriptions

The LEDs are described in the table below.

Indicator	Condition	Message
Ready	Green	Module is ready to communicate. Operating voltage for internal logic (5 V) is present.
	Off	Module not ready.
FUSE 1	Green	Output voltage of outputs 1 ... 4 (one common output voltage for group 1) present and fuse 1 is OK.
	Off	Output voltage of outputs 1 ... 4 (one common output voltage for group 1) is not present and/or fuse 1 is defective
FUSE 2	Green	Output voltage of outputs 5 ... 8 (one common output voltage for group 2) present and fuse 1 is OK.
	Off	Output voltage of outputs 5 ... 8 (one common output voltage for group 2) is not present and/or fuse 1 is defective
Upper row IN 1...10	Green	Input status (an LED per input); Input point active, i.e., input carries a 1 signal (logically ON)
	Off	Input status (an LED per input); Input point inactive, i.e., input carries a 0 signal (logically OFF)
Middle row OUT 1,3 ,5 ,7 , 9, 11, 13, 15	Green	Output status (an LED per output); Output point active, i.e., output carries a 1 signal (logically ON)
	Off	Output status (an LED per output) Output point inactive, i.e., output carries a 0 signal (logically OFF)

Specifications

Overview

This section contains specifications for the 170 ADM 690 51 I/O base.

General Specifications

Module type	10 discrete inputs in 1 group 8 triac outputs in 1 group (in 2 fuse groups)
Supply voltage	120 VAC
Supply voltage range	100 ... 132 VAC @ 47...63Hz
Supply current consumption	max. 160 mA at 120 VAC
Power dissipation	6 W + ((# of input points on x .144 W) + (# of output points on x .75 W))
I/O map	1 input word 1 output word

Isolation

Input to input	none
Output group to output group	none
Input to output group	125 VAC, tested with 1780 VAC
Field to communication adapter	125 VAC, tested with 1780 VAC

Fuses

Internal	Wickman 19195-2.5 ANote If you replace this fuse, you must use a Ferraz type W 020547 (UL listed).
External: operating voltage (L1)	315 mA fast-blow, 250 V
External: input voltage (2L1)	max. 4 A fast-blow, 250 V
External: output voltage (1L1)	According to the supply of the connected actuators–not to exceed 8 A slow-blow

EMC

Immunity	IEC 1131-2 Surge on auxiliary power supply 2 KV to PE, 1 KV to differential
Emissions	EN 50081-2
Agency approvals	UL, CSA, CE, FM Class 1 Div. 2

Physical Dimensions

Width	125 mm (4.9 in)
Depth (with no adapter)	40 mm (1.54 in)
Length	141.5 mm (5.5 in) no or one busbar 159.5mm (6.3in) two busbars 171.5 mm (6.75in) three busbars
Weight	220 g (0.49 lb)

Discrete Inputs

Number of points	10
Number of groups	1
Signal type	120 VAC
IEC 1131 type	2 (See Appendix *IEC 1131 Input Types, page 673* for definitions of IEC input types.)
ON voltage	74 AC
OFF voltage	20 AC
Input current	6 mA minimum ON 2.6 mA maximum OFF
Input voltage range	74 ... 132 VAC
Input resistance	4 kOhm
Response time	max. 1/2 x 1/f ms OFF to ON max. 1/2 x 1/f ms ON to OFF

Discrete Outputs

Output type	Triac
Output supply voltage	120 AC
Output supply voltage range	100 ... 132 VAC
Output voltage	External supply - 1.5 VAC
Number of points	8
Number of groups	1
Points per group	8, but 2 fuses
Current capacity	0.5 A/point maximum, 30 mA/point minimum 2 A/group 4 A/module
Signal type	True High
Leakage current (output out)	< 1.3 mA @120 VAC
On state voltage drop	< 1.5 VAC @ 0.5 A
Fault sensing	One common voltage supply for output 1 .. 4 and output 5 ... 8, each is protected by an internal fuse against short-circuits (but not against overload). Each output is provided with an RC network (normal mode noise voltage rejection) and a Varistor (surge protection).
Fault reporting	none
Error indication	none
Response time (resistive load / 0.5 A)	max. 1/2 x 1/f ms OFF to ON max. 1/2 x 1/f ms ON to OFF
Maximum switching cycles	3000/h for 0.5 A inductive load

Internal Pin Connections

Overview

This section contains an illustration showing the internal connections between terminals on the I/O base and an optional busbar.

Illustration

Rows 1 through 3 show the internal connections between terminals on the I/O base. Row 4 through 6 show the internal connections on the optional busbar.

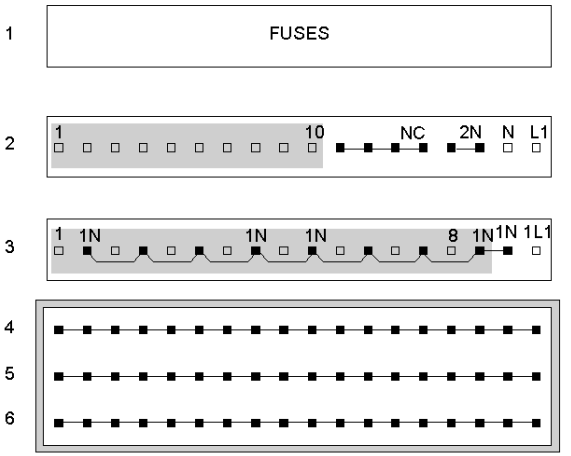

Field Wiring Guidelines

Overview

Inputs are field wired to row 2 of the I/O base. Outputs are field wired to row 3. This section contains wiring guidelines and precautions for wiring the 170 ADM 690 51 TSX Momentum I/O base.

Terminal Connector

To connect field devices to the I/O base, you need a field wiring terminal connector. Schneider Electric sells terminal connectors in sets of three.

Type	Part Number
Screw-in	170 XTS 001 00
Spring-clip	170 XTS 002 00

Busbar May Be Required

Depending on the type of field devices you are using, you may need a 1-, 2-, or 3-row busbar. The following busbars are available from Schneider Electric.

Type	Number of Rows	Part Number
Screw-in	1 - row	170 XTS 006 01
	2 - row	170 XTS 005 01
	3 - row	170 XTS 004 01
Spring-clip	1 - row	170 XTS 007 01
	2 - row	170 XTS 008 01
	3 - row	170 XTS 003 01

Mapping Terminal Blocks

⚠ CAUTION

POTENTIAL FOR SHORT CIRCUITS AND/OR POWER-UP SPIKES

Provide external fuses on the operating voltage to protect the module. Appropriate fuse values are shown in the wiring illustration. An unprotected module may be subject to short circuits and/or power-up spikes.

Failure to follow these instructions can result in injury or equipment damage.

The following table shows mapping terminal blocks and optional busbars.

Row	Terminal	Function
1	FUSE 1, FUSE 2	Internal fuses for output voltages
2	1 ... 10	Inputs
	11 ... 14	Connected internally within the row, for general purpose use
	15 ... 16	2N for inputs
	17	Return (N)
	18	120 VAC Operating voltage (L1)
3	1, 3, 5, 7, 9, 11, 13, 15	Outputs
	2, 4, 6, 8, 10, 12, 14, 16	Return (1N) for the actuators
	17	Return for the output voltage
	18	20 ... 132 VAC Output voltage for terminal pins 1 ... 8 (1L1)
4	1 ... 18	120 VAC Input voltage (2L1)
5	1 ... 18	Return (2N) for sensors
6	1 ... 18	Protective earth (PE)

Wiring Diagrams

Overview

This section provides diagrams to assist you in wiring the following types of devices:

- 2-wire sensor with a 2-wire actuator
- 4-wire sensor with a 3-wire actuator
- Wiring a 170 ADM 690 51 as a 170 ADM 690 50

2-Wire Sensor with a 2-Wire Actuator

The diagram below shows field wiring for a 2-wire sensor and a 2-wire actuator.

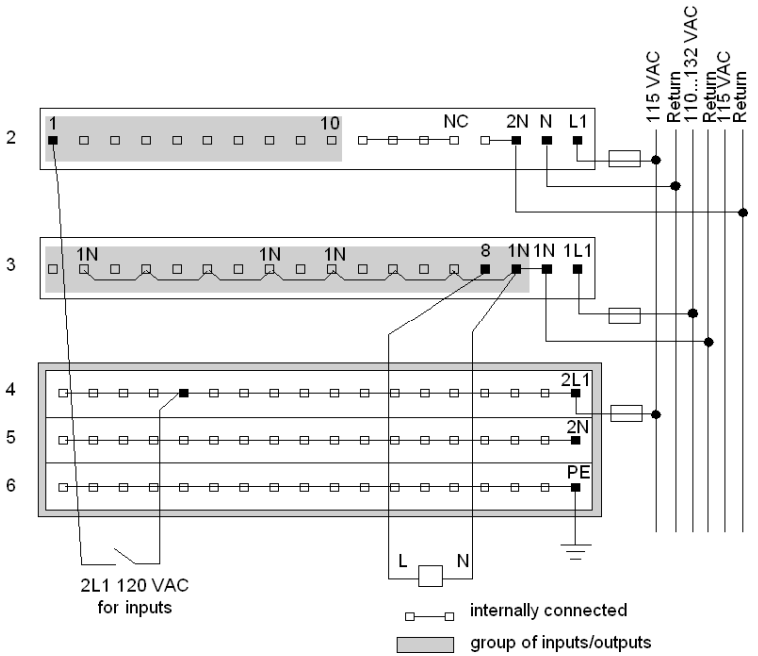

4-Wire Sensor with a 3-Wire Actuator

The diagram below shows field wiring for a 4-wire sensor and a 3-wire actuator. When using 3-phase current for supply L1, 1L1 and 2L1 must come from one phase.

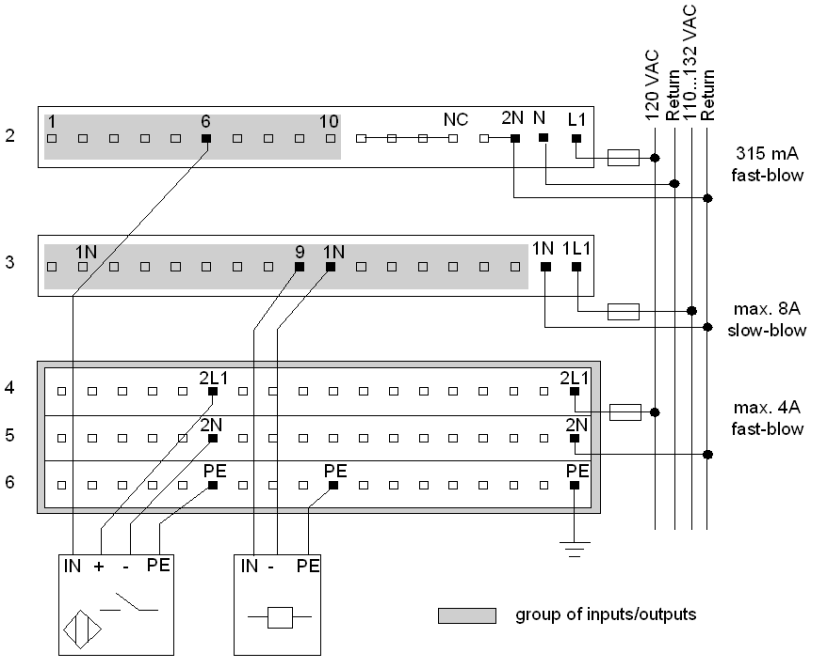

Wiring a 170 ADM 690 51 as a 170 ADM 690 50

The following diagram shows the field-side input circuitry.

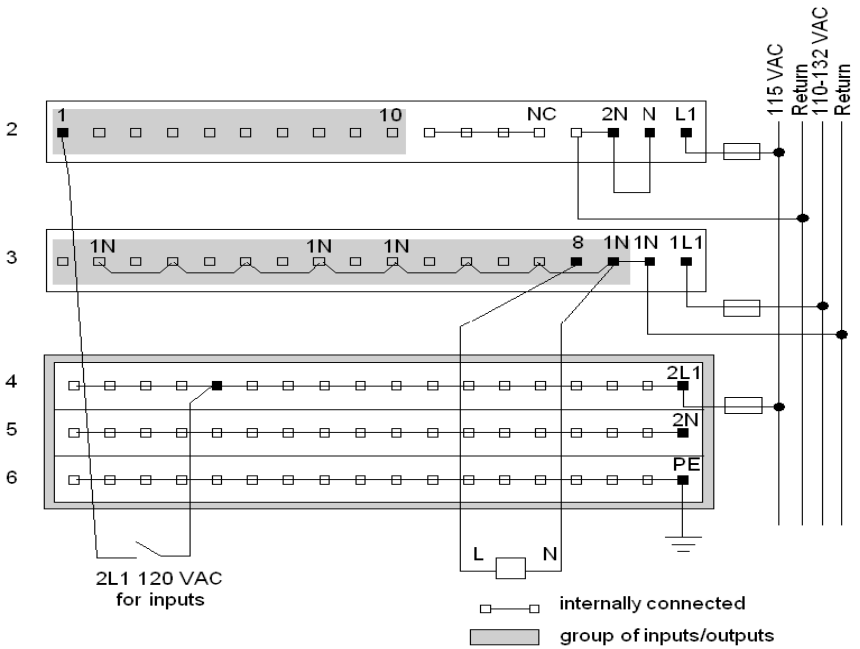

Simplified Input Schematics

The following diagram shows the field-side input circuitry.

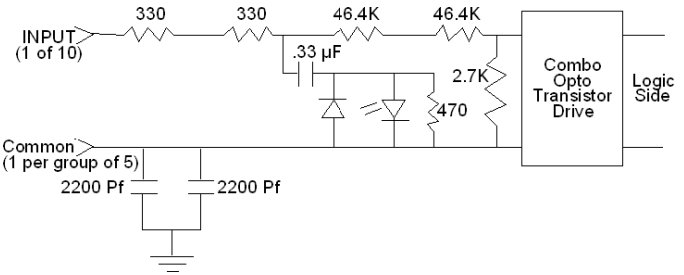

Simplified Output Schematics

The following diagram shows the field-side output circuitry.

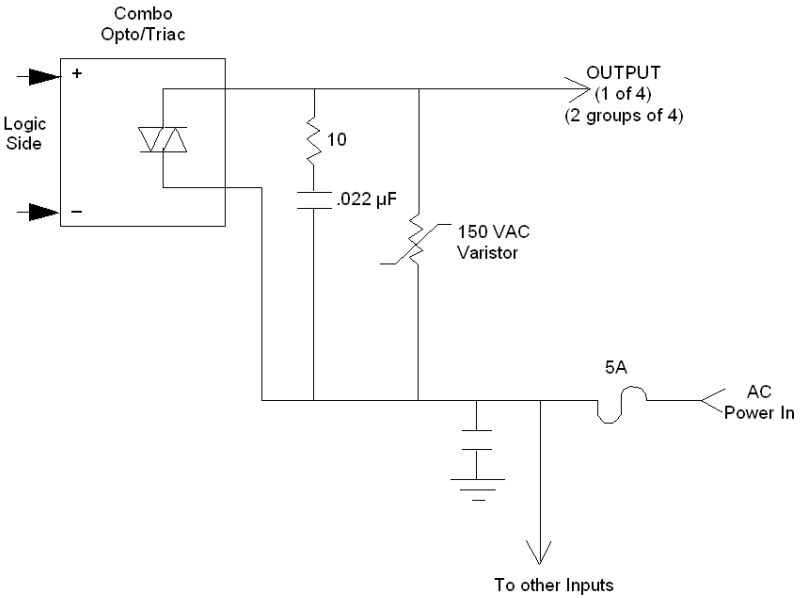

I/O Mapping

Overview

The 170 ADM 690 51 TSX Momentum I/O base supports 10 discrete inputs and 8 discrete outputs. This section contains information about the mapping of the I/O data into input words and output words.

I/O Map

The I/O base may be mapped as one input word and one output word, or as 10 discrete input points and 8 discrete output points.

IEC vs. Ladder Logic

In order to correctly field wire the inputs/outputs and map the input/output data, you need to know which type of Momentum Adapter is mounted on the base.

Adapters may be either IEC compliant or 984 Ladder Logic compliant.

	IEC Compliant	**984 Ladder Logic Compliant**
Momentum Processor Adapters	All	None
Momentum Communication Adapters	All, except 170 NEF 110 21 170 NEF 160 21 170 FNT 110 00 170 FNT 110 01	170 NEF 110 21 170 NEF 160 21 170 FNT 110 00 170 FNT 110 01

Data Mapping

The figure below shows how data is mapped on the I/O base with an IEC Compliant adapter. When the I/O is mapped as a discrete (1x/0x), the MSB is assigned to Pin 1 and the LSB is assigned to Pin 16. When the I/O is mapped as a word or register (3x/4x), the MSB (bit 15) is assigned to Pin 16 and the LSB (bit 0) is assigned to Pin 1.

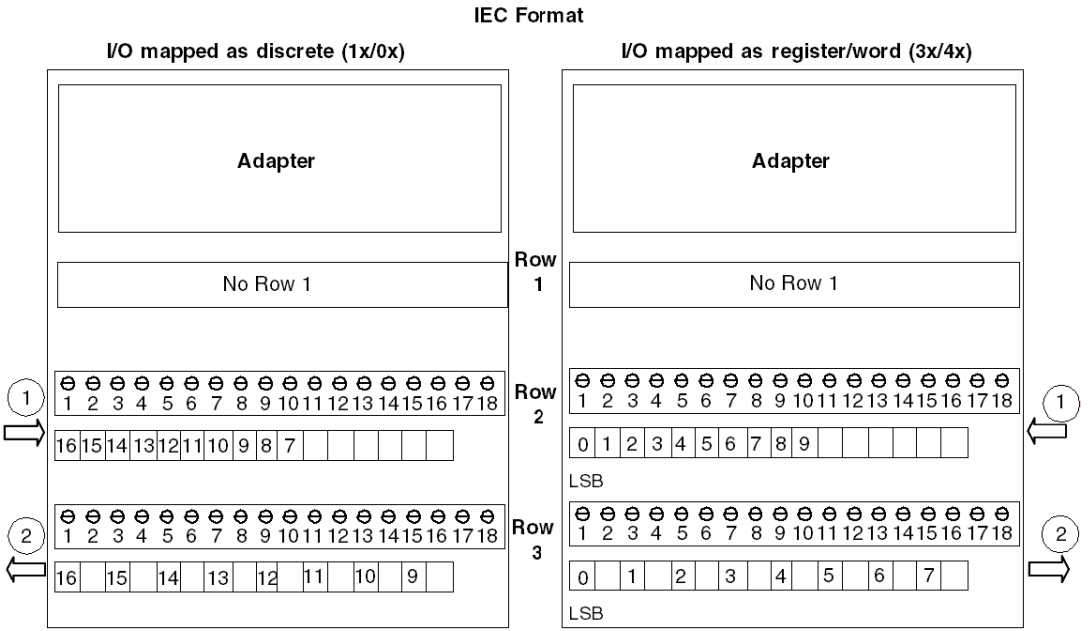

1 inputs
2 outputs

The figure below shows how data is mapped on the I/O base with a Ladder Logic Compliant adapter. When the I/O is mapped as a discrete (1x/0x), the MSB is assigned to Pin 16 and the LSB is assigned to Pin 1. When the I/O is mapped as a word or register (3x/4x), the MSB (bit 15) is assigned to Pin 1 and the LSB (bit 0) is assigned to Pin 16.

984 Format

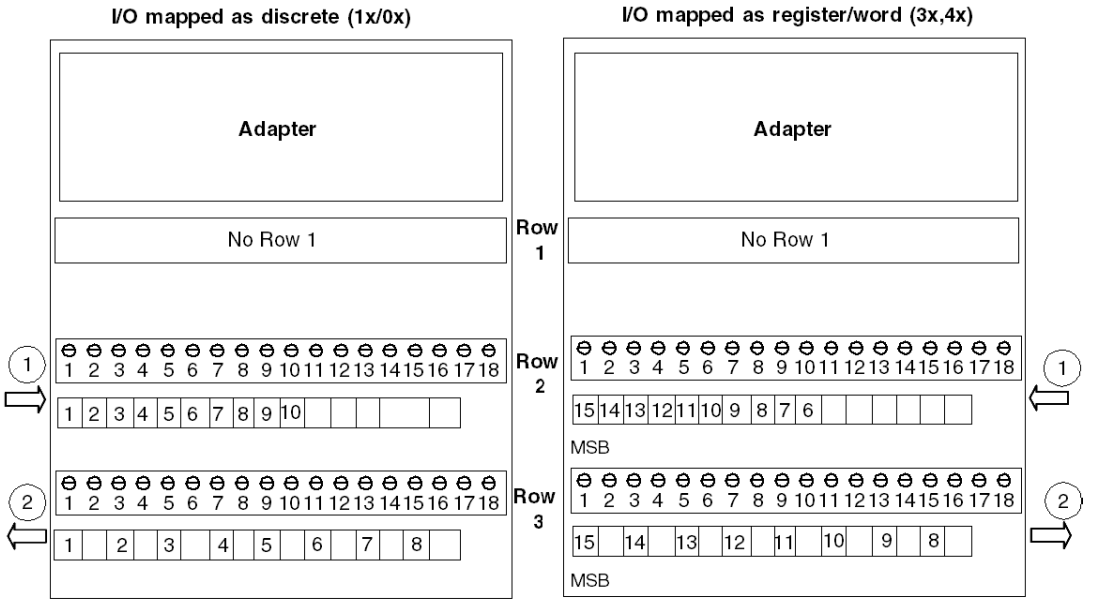

1 inputs
2 outputs

170 ADM 850 10 10 to 60 VDC Module Base

25

Overview

This chapter describes the 170 ADM 850 10 module base.

What's in this Chapter?

This chapter contains the following topics:

Topic	Page
Front Panel Components	404
Specifications	406
Internal Pin Connections	410
Field Wiring Guidelines	411
Wiring Diagrams	413
I/O Mapping	418

Front Panel Components

Overview

This section contains an illustration of the front panel of the 170 ADM 850 10 Momentum I/O base and a description of the LEDs.

Front Panel Illustration

The front panel of the I/O base is shown in the illustration below.

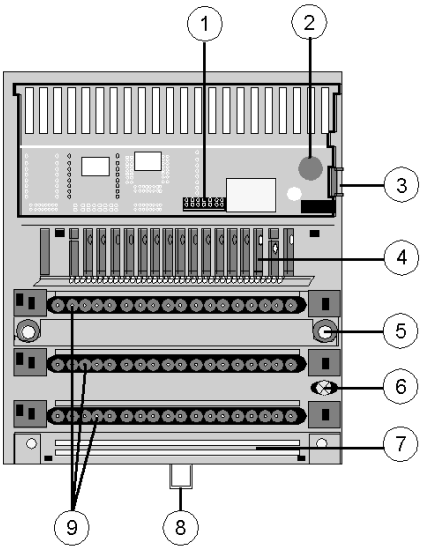

Components of the I/O module:

Label	Description
1	Internal interface (ATI) connector
2	Ground nut standoff
3	Locking and ground contact for the adapter
4	LED status display
5	Mounting holes for panel mount
6	Grounding screw
7	Busbar Mounting Slot
8	Locking tab for DIN rail mount
9	Sockets for the terminal connectors

LED Illustration

The LEDs are shown in the illustration below.

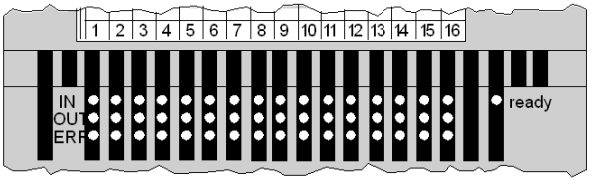

LED Descriptions

The LEDs are described in the table below.

Indicator	Condition	Message
Ready	Green	Module is ready to communicate. Operating voltage for internal logic (5 V) is present.
	Off	Module not ready.
Upper row IN 1...16	Green	Input status (an LED per input); Input point active, ie. input carries a 1 signal (logically ON)
	Off	Input point inactive, ie. input carries a 0 signal (logically OFF)
Middle row OUT 1...16	Green	Output status (an LED per output); Output point active, ie. output carries a 1 signal (logically ON)
	Off	Output point inactive, ie. Output carries a 0 signal (logically OFF)
Lower row ERR 1...16	Red	Output overload (an LED per output). Short circuit or overload on the corresponding output.
	Off	Outputs 1 ... 16 operating normally.

Specifications

Overview

This section contains specifications for the 170 ADM 850 10 Momentum I/O base.

General Specifications

Module type	16 discrete inputs in 1 group 16 discrete outputs in 1 group
Supply voltage	10-60 VDC
Supply voltage range	10-60 VDC
Supply current consumption max	500 mA at 12 VDC 250 mA at 24 VDC 125 mA at 48 VDC
Power dissipation	6 W + ((# of input points on x .144 W) + (# of output points on x .25 W))
I/O map	1 input word or 16 discrete inputs 1 output word or 16 discrete outputs

Isolation

Input to input	none
Output group to output group	none
Input to output	707 VDC
Logic to output	707 VDC
Field to protective earth	707 VDC
Input to output	707 VDC
Field to communication adapter	Defined by Communication Adapter type

Fuses

Internal	none
External: operating voltage (row 1)	1 A slow-blow
External: input reference voltage (row 3)	1 A slow-blow (Bussmann GDC-1A or equivalent)
External: output voltage (row 2)	According to the supply of the connected actuators, not to exceed 8 A fast-blow.

EMC

Immunity	IEC 1131-2 Surge on auxiliary power supply, 500V
Emissions	EN 50081-2 (limitation A)
Agency approvals	UL, CSA, CE, FM Class 1, Div. 2 pending

Physical Dimensions

Width	125 mm (4.9 in)
Depth (with no adapter)	40 mm (1.54 in)
Length	141.5 mm (5.5 in) with or without one busbar 159.5mm (6.3in) two busbars 171.5 mm (6.75in) three busbars
Weight	200 g (0.44 lb)

Discrete Inputs

Number of points	16
Number of groups	1
Points per group	16
Signal type	True High
IEC 1131 type	1+ (See Appendix for definitions of IEC input types.)
Input Voltage Level	
12 VDC +20%,-15% 24 VDC +25%,-20% 48 VDC +25%,-20%	>7.5 VDC On, <2.5 VDC Off >11 VDC On, <5 VDC Off >30 VDC On, <10 VDC Off
OFF State Leakage Current	
12 VDC 24 VDC 48 VDC	1.5 mA and lower 1.5 mA and lower 1.5 mA and lower
Input Operating Current	
12 VDC ON Current 24 VDC ON Current 48 VDC ON Current	2.3 mA 2.7 mA 2.9 mA

Input voltage range	10-60 VDC
Input voltage surge	75 volts peak for 10ms
Response time	3.5 ms OFF to ON 5.5 ms ON to OFF

NOTE: Discrete 10-60 VDC inputs require an Input Voltage Reference (row 3 terminal block, terminals 17 and 18). The Input Voltage Reference must be the same voltage level as the voltage level as supplied to the inputs. This reference is required for the module to select the correct Turn On and Turn Off thresholds for the inputs.

Discrete Outputs

Output type	Solid state switch
Output supply voltage	10-60 VDC
Number of points	16
Number of groups	1
Current capacity	460 mA/point maximum up to 40 degrees C 430 mA/point from 40 degrees C to 50 degrees C 375 mA/point from 50 degrees C to 60 degrees C
Signal type	True High (sourcing)
Leakage current (output out)	< 1 mA @ 60 VDC
Surge (inrush) current	5 A for 1 ms
On state voltage drop	< 1.0 VDC @ 0.5 A
Fault sensing (See Note Below)	Outputs are electronically safeguarded to assist in short circuit and overload protection

Fault reporting	1 red LED/point (row 3) ON when short current/ overload occurs
Error indication	Output overload for at least one output (I/O-Error) to communication adapter
Response time (resistive load / 460 mA)	< 3 ms OFF to ON < 3 ms ON to OFF
Maximum switching cycles	1000/h for 0.5 A inductive load 100/s for 0.5 A resistive load 8/s for 1.2 W Tungsten load

NOTE: Discrete 10-60 VDC outputs incorporate thermal shutdown and overload protection. The output current of a shortened output is limited to a nondestructive value. The short circuit heats the output driver and the output will switch off. The output will switch on again if the driver drops below the overtemperature threshold. If the short circuit still exists, the driver will reach the overtemperature condition again and will switch off again.

Internal Pin Connections

Overview

This section contains an illustration showing the internal connections between terminals on the I/O base and an optional busbar.

Illustration

Rows 1 through 3 show the internal connections between terminals on the I/O base. Row 4 through 6 show the internal connections on the optional busbar.

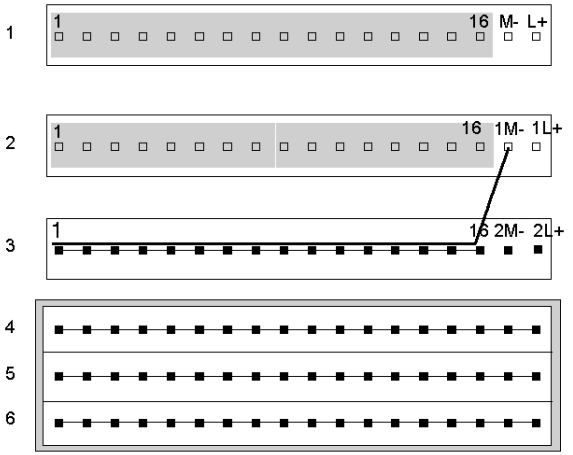

Field Wiring Guidelines

Overview

Inputs are field wired to row 1 of the base. The outputs are field wired to row 2. This section contains wiring guidelines and precautions.

Terminal Connector

To connect field devices to the I/O base, you need a field wiring terminal connector. Schneider Automation sells terminal connectors in sets of three.

Type	Part Number
Screw-in	170 XTS 001 00
Spring-clip	170 XTS 002 00

Busbar May Be Required

Depending on the type of field devices you are using, you may need a 1-, 2-, or 3-row busbar. The following busbars are available from Schneider Automation.

Type	Number of Rows	Part Number
Screw-in	1 - row	170 XTS 006 01
	2 - row	170 XTS 005 01
	3 - row	170 XTS 004 01
Spring-clip	1 - row	170 XTS 007 01
	2 - row	170 XTS 008 01
	3 - row	170 XTS 003 01

Mapping Terminal Blocks

⚠ CAUTION

POTENTIAL FOR SHORT CIRCUITS AND/OR POWER-UP SPIKES

Provide external fuses on the operating voltage to protect the module. Appropriate fuse values are shown in the wiring illustration. An unprotected module may be subject to short circuits and/or power-up spikes.

Failure to follow these instructions can result in injury or equipment damage.

The following table shows mapping terminal blocks and optional busbars.

Row	Terminal	Function
1	1 through 16	Inputs 1 through 16
1	17	Power supply return for module (M-)
1	18	+10 to 60 VDC power for module (L+
2	1 through 16	Outputs 1 through 16
2	17	Power supply return for outputs (1M-)
2	18	+10 to 60 VDC power for outputs (1L+)
3	1 through 16	Return connections for outputs
3	17	Power supply return for input voltage reference (2M-)
3	18	+10 to 60 VDC input reference voltage (2L+)
4	1 through 18	Input voltage for I1...I16 or PE
5	1 through 18	Return (M-)
6	1 through 18	Protective Earth (PE)

Protective Circuit May Be Required

When contacted switches are used on the input lines or when lines to the peripherals are very long, the outputs of inductive loads require protective circuitry with a clamping/suppressor diode. Install the protective circuit parallel to the operating coil.

Wiring Diagrams

Overview

This section provides diagrams to assist you in wiring the following types of devices:

- 2-wire devices
- sensors activated by an output
- 4-wire sensors with a 2-wire actuator
- broken wire detection

2-Wire Devices

The diagram below shows an example of wiring two-wire devices.

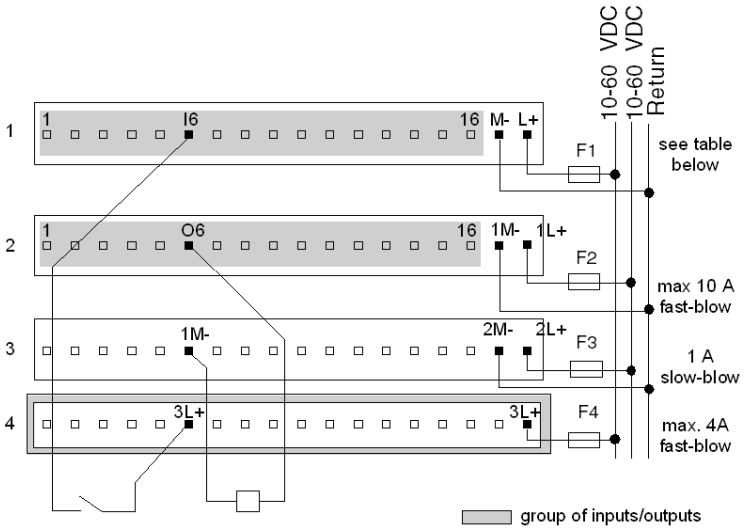

Fuse table for F1

Voltage	Fuse
12 VDC	1 A slow-blow
24 VDC	1 A slow-blow
48 VDC	1 A slow-blow

Sensor Activated by Output

The wiring diagram below shows an example of a sensor activated by an output. The diagram shows the sensors being supplied with voltage only when the outputs on pins 6 and 14, row 2, are high. The inputs from pins 6 and 14, row 1, can be high only when the associated outputs are high.

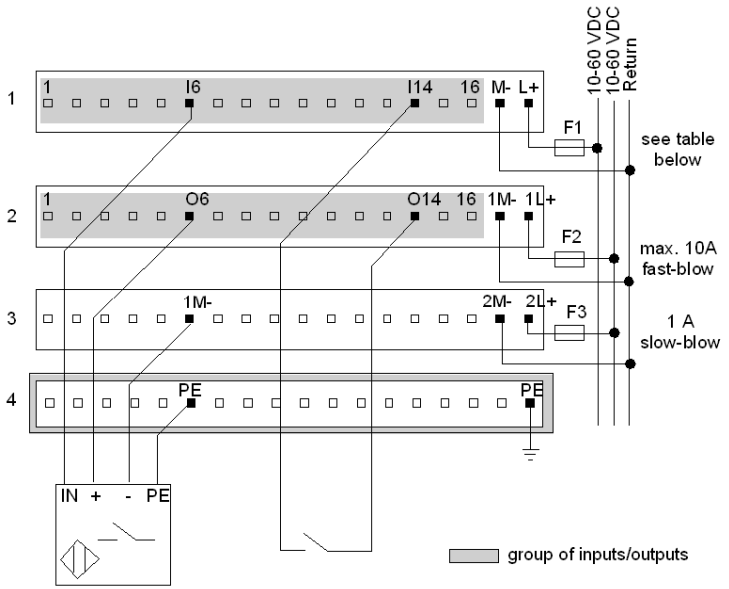

Fuse table for F1

Voltage	Fuse
12 VDC	1 A slow-blow
24 VDC	1 A slow-blow
48 VDC	1 A slow-blow

Four-Wire Sensor with a Two-Wire Actuator

The diagram below shows a four-wire sensor with a two-wire actuator. The process of wiring a three-wire sensor is very similar to the one below. Because three-wire sensors do not require PE, a two-row busbar could be used instead of the three-row busbar shown.

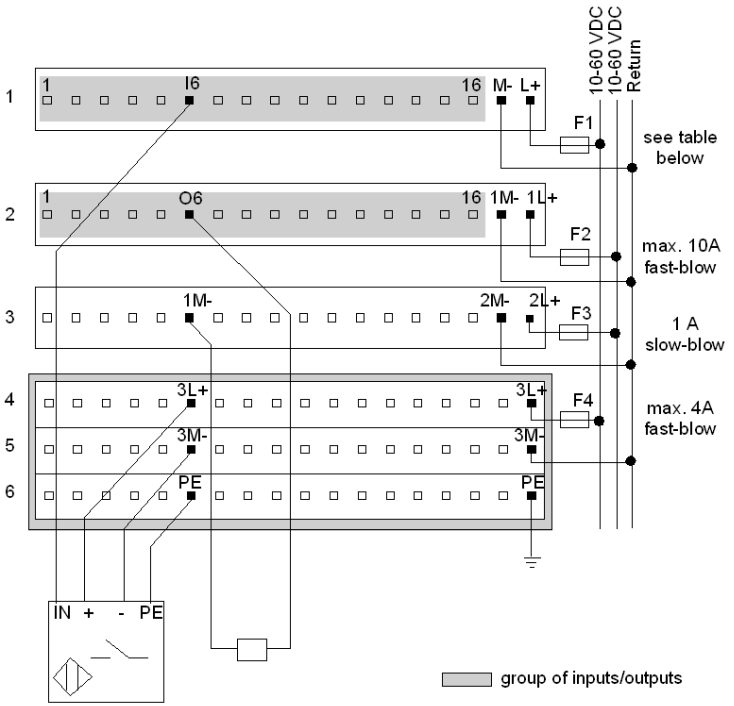

Fuse table for F1

Voltage	Fuse
12 VDC	1 A slow-blow
24 VDC	1 A slow-blow
48 VDC	1 A slow-blow

Broken Wire Detection

The diagram below shows a three-wire actuator with an optional wiring scheme for broken wire detection. The dotted line reads back whether or not current has reached the actuator. When the output on pin 6, row 2, is high, the input from pin 6, row 1, must also be high.

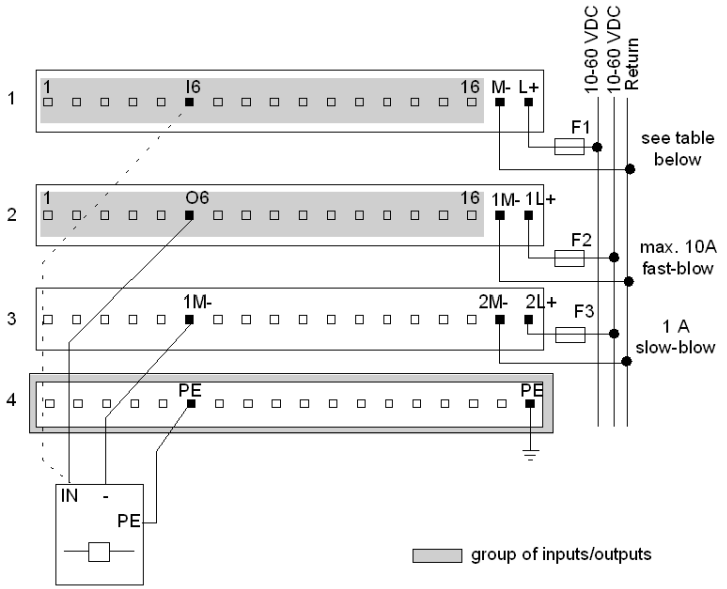

Fuse table for F1

Voltage	Fuse
12 VDC	1 A slow-blow
24 VDC	1 A slow-blow
48 VDC	1 A slow-blow

Simplified Input Schematics

The following diagram shows the field-side input circuitry.

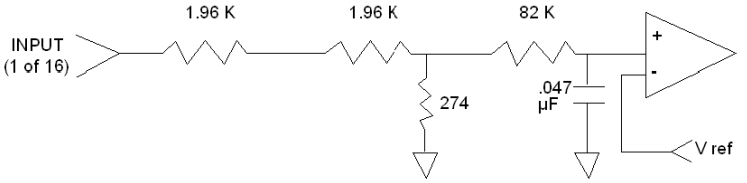

Simplified Output Schematics

The following diagram shows the field-side output circuitry.

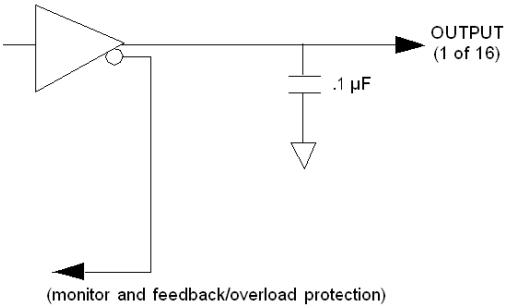

I/O Mapping

Overview

The 170 ADM 850 10 TSX Momentum I/O base supports 16 discrete inputs and 16 discrete outputs. This section contains information about the mapping of the I/O data into input words and output words.

I/O Map

The I/O base may be mapped as one input word and as one output word, or as 16 discrete input points and as 16 discrete output points.

IEC vs. Ladder Logic

In order to correctly field wire the inputs/outputs and map the inputs/outputs data, you need to know which type of Momentum Adapter is mounted on the base. Adapters may be either IEC compliant or 984 Ladder Logic compliant.

	IEC Compliant	**984 Compliant**
Momentum Processor Adapters	All	None
Momentum Communication Adapters	All, except 170 NEF 110 21 170 NEF 160 21 170 FNT 110 00 170 FNT 110 01	170 NEF 110 21 170 NEF 160 21 170 FNT 110 00 170 FNT 110 01

Data Mapping

The figure below shows how data is mapped on the I/O base with an IEC Compliant adapter. When the I/O is mapped as discrete points (1x/0x), the MSB is assigned to Pin 1 and the LSB is assigned to Pin 16. When the I/O is mapped as a word or register (3x/4x), the MSB (bit 15) is assigned to Pin 16 and the LSB (bit 0) is assigned to Pin 1.

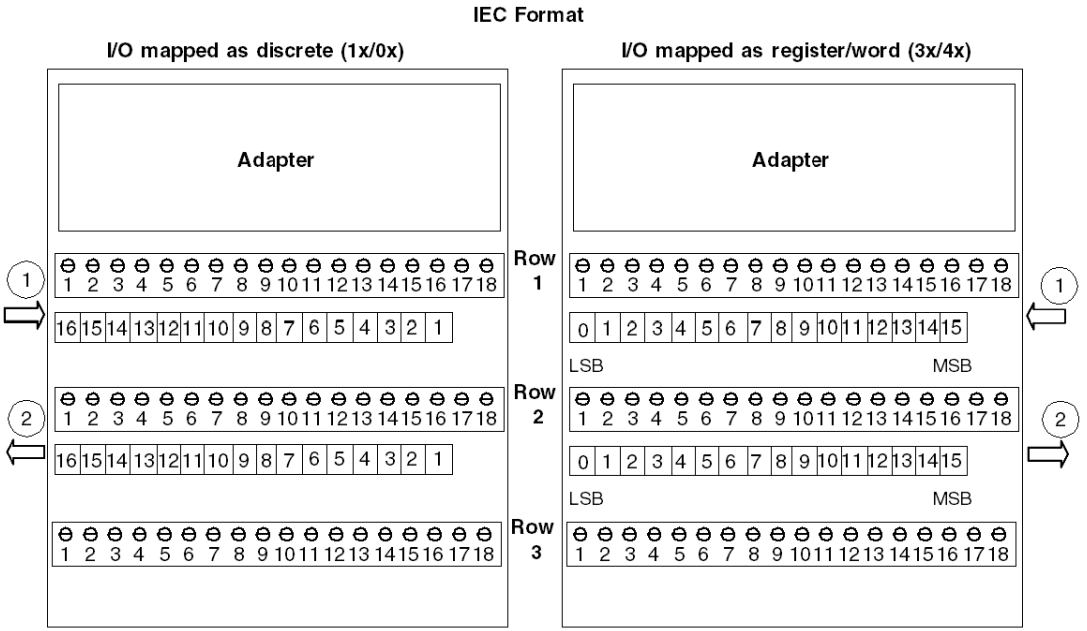

1 inputs
2 outputs

The figure below shows how data is mapped on the I/O base with a 984 Ladder Logic Compliant adapter. When the I/O is mapped as discrete points (1x/0x), the MSB is assigned to Pin 16 and the LSB is assigned to Pin 1. When the I/O is mapped as a word or register (3x/4x), the MSB (bit 15) is assigned to Pin 1 and the LSB (bit 0) is assigned to Pin 16.

984 Format

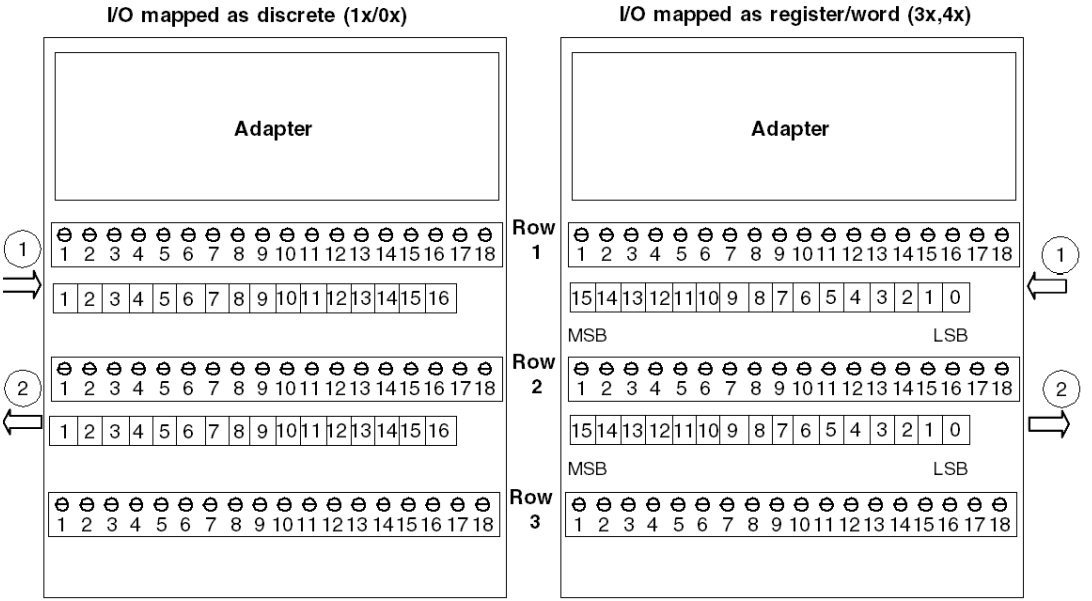

1 inputs
2 outputs

170 ADO 340 00 24 VDC - 16 Pt. Discrete Output Module Base

26

Overview

This chapter describes the 170 ADO 340 00 TSX Momentum I/O base.

What's in this Chapter?

This chapter contains the following topics:

Topic	Page
Front Panel Components	422
Specifications	424
Internal Pin Connections	426
Field Wiring Guidelines	427
Wiring Diagrams	429
I/O Mapping	431

Front Panel Components

Overview

This section contains an illustration of the front panel of the 170 ADO 340 00 I/O base and a description of the LEDs.

Front Panel Illustration

The front panel of the I/O base is shown in the illustration below.

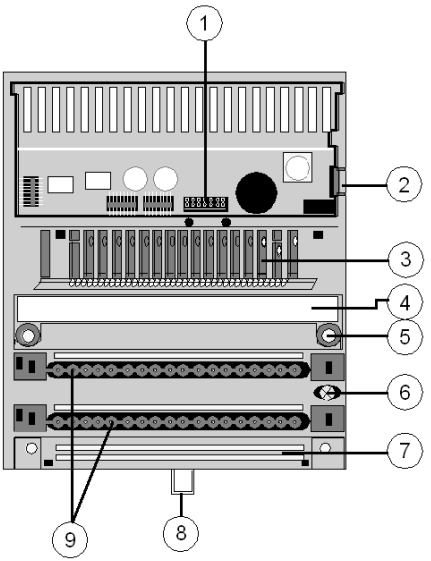

Components of the I/O module

Label	Description
1	Internal interface (ATI) connector
2	Locking and ground contact for the adapter
3	LED status display
4	Protective cover
5	Mounting holes for panel mount
6	Grounding screw
7	Grounding Busbar Mounting Slot
8	Locking tab for DIN rail mount
9	Sockets for the terminal connectors

LED Illustration

The LEDs are shown in the illustration below.

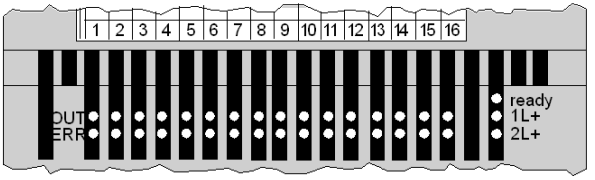

LED Descriptions

The LEDs are described in the table below.

Indicator	Condition	Message
Ready	Green	Module is ready to communicate. Operating voltage for internal logic (5 V) is present.
	Off	Module not ready.
1L+	Green	Output voltage 1L+ of inputs 1 ... 8 (group 1) is present
	Off	Output voltage of inputs 1 ... 8 (group 1) is not present
2L+	Green	Output voltage 2L+ of inputs 9 ... 16 (group 2) is present
	Off	Output voltage of inputs 9 ... 16 (group 2) is not present
Middle row OUT 1...16	Green	Output status (an LED per output); Output point active, ie. output carries a 1 signal (logically ON)
	Off	Output status (an LED per output); Output point inactive, ie. output carries a 0 signal (logically OFF)
Lower row ERR 1...16	Red	Output overload (an LED per output). Short circuit or overload on the corresponding output.
	Off	Outputs 1 ... 16 operating normally.

Specifications

Overview

This section contains specifications for the 170 ADO 340 00 I/O base.

General Specifications

Module type	16 discrete outputs in 2 groups (8 pts/group)
Supply voltage	24 VDC
Supply voltage range	20...30 VDC
Supply current consumption	max. 250 mA at 24 VDC
Power dissipation	6 W + (# of output points on x .25 W)
I/O map	1 output word

Isolation

Output group to output group	none
Field to communication adapter	Defined by communication adapter type

Fuses

Internal	none
External: operating voltage	1 A slow-blow (Bussmann GDC-1A or equivalent)
External: output voltage	According to the supply of the connected actuators– not to exceed 4 A slow-blow/ group

EMC

Immunity	IEC 1131-2 Surge on auxiliary power supply 500 V
Emissions	EN 50081-2
Agency approvals	UL, CSA, CE, FM Class 1 Div. 2 pending

Physical Dimensions

Width	125 mm (4.9 in)
Depth (with no adapter)	40 mm (1.54 in)
Length	141.5 mm (5.5 in) no or one busbar 159.5mm (6.3in) two busbars 171.5 mm (6.75in) three busbars
Weight	210 g (0.46 lb)

Discrete Outputs

Output type	Solid state switch
Output supply voltage	24 VDC
Output supply voltage range	20 ... 30 VDC
Output voltage	External supply - .5 VDC
Number of points	16
Number of groups	2
Points per group	8
Current capacity	0.5 A/point maximum 4 A/group 8 A/module
Signal type	True High
Leakage current (output out)	< 1 mA @ 24 VDC
Surge (inrush) current	5 A for 1 ms
On state voltage drop	< 0.5 VDC @ 0.5 A
Fault sensing	Outputs are electronically safeguarded to assist in short circuit and overload protection
Fault reporting	1 red LED/point (row 3) ON when short current/ overload occurs
Error indication	Output overload for at least one output (I/O-Error) to communication adapter
Response time (resistive load / 0.5 A)	< 0.1 ms OFF to ON < 0.1 ms ON to OFF
Maximum switching cycles	1000/h for 0.5 A inductive load 100/s for 0.5 A resistive load 8/s for 1.2 W Tungsten load

Internal Pin Connections

Overview

This section contains an illustration showing the internal connections between terminals on the I/O base and an optional one-row busbar.

Illustration

Rows 1 through 3 show the internal connections between terminalson the I/O base. Row 4 shows the internal connections on the optional busbar.

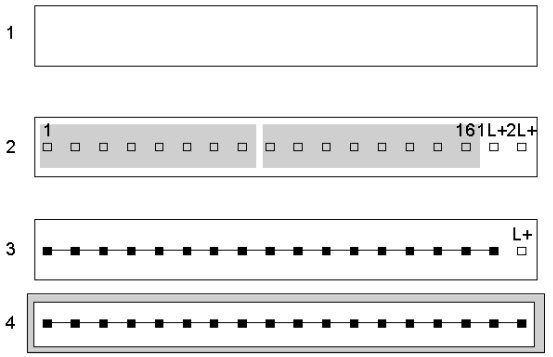

Field Wiring Guidelines

Overview

The outputs are field wired to row 2 of the base. This section contains wiring guidelines and precautions.

Terminal Connector

To connect field devices to the I/O base, you need a field wiring terminal connector. Schneider Electric sells terminal connectors in sets of three.

Type	Part Number
Screw-in	170 XTS 001 00
Spring-clip	170 XTS 002 00

Busbar May Be Required

Depending on the type of field devices you are using, you may need a 1-row busbar. The following busbars are available from Schneider Electric.

Type	Part Number
Screw-in	170 XTS 006 01
Spring-clip	170 XTS 007 01

Mapping Terminal Blocks

⚠ CAUTION

POTENTIAL FOR SHORT CIRCUITS AND/OR POWER-UP SPIKES

Provide external fuses on the operating voltage to protect the module. Appropriate fuse values are shown in the wiring illustration. An unprotected module may be subject to short circuits and/or power-up spikes.

Failure to follow these instructions can result in injury or equipment damage.

The following table shows mapping terminal blocks and optional busbars.

Row	Terminal	Function
1	Not used	
2	1 ... 8	Outputs for group 1
	9 ... 16	Outputs for group 2
	17/18	24 VDC for output groups 1 and 2 (1L+, 2L+)
3	1 ... 16	Return (M-) for outputs
	17	Return (M-) for module and outputs
	18	+ 24 VDC Operating voltage (L+)
4	1 ... 18	Protective earth (PE)

Protective Circuit Required

When contacted switches are used on the input lines or when lines to the peripherals are very long, the outputs of inductive loads require protective circuitry with a clamping/suppressor diode. Install the protective circuit prallel to the operating coil.

Wiring Diagrams

Overview

This section provides diagrams to assist you in wiring the following types of devices:

- 2-wire actuators
- 3-wire actuators

2-Wire Actuators

The diagram below shows an example of wiring for a 2-wire actuator.

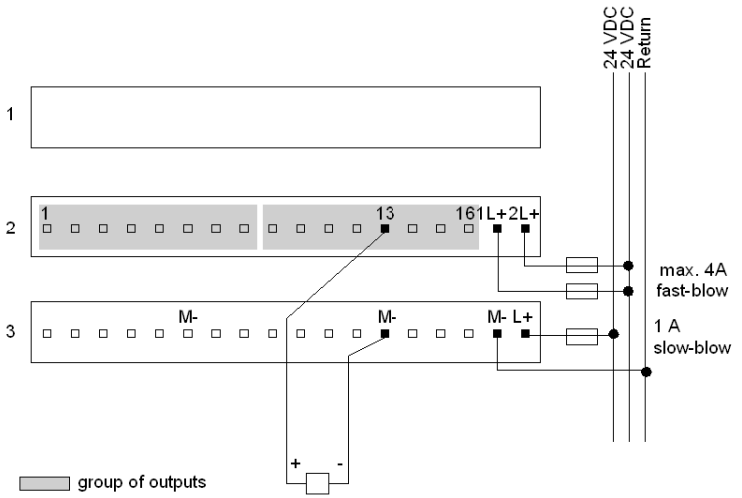

3-Wire Actuator

The diagram below shows an example of wiring for 3-wire actuator.

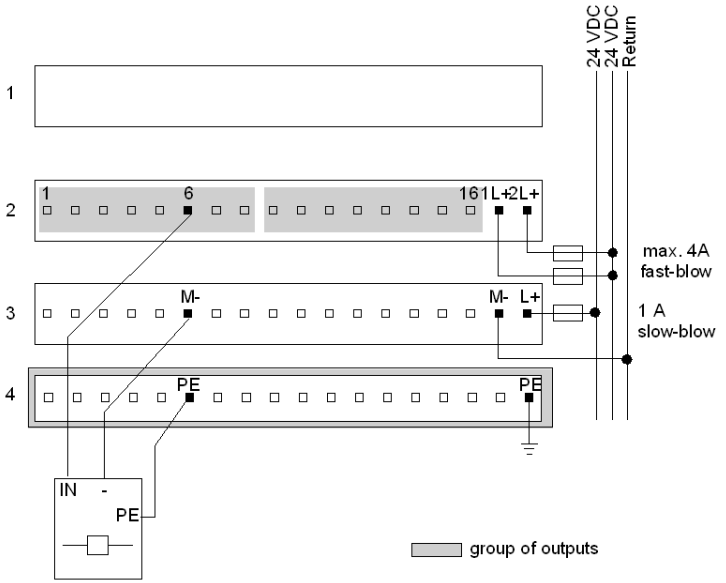

Simplified Schematics

The following diagram shows the field-side output circuitry.

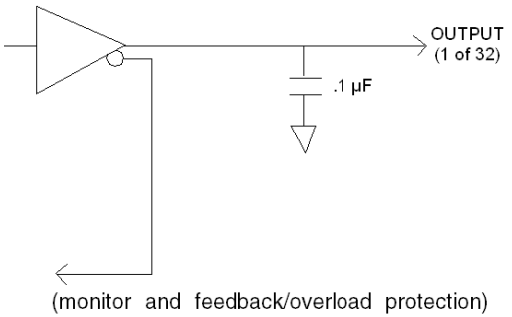

I/O Mapping

Overview

The 170 ADO 340 00 TSX Momentum I/O base supports 16 discrete outputs. This section contains information about the mapping of the I/O data into output words.

I/O Map

The I/O base may be mapped as one output word,or as 16 discrete output points.

IEC vs. Ladder Logic

In order to correctly field wire the outputs and map the output data, you need to know which type of Momentum Adapter is mounted on the base.

Adapters may be either IEC or 984 Ladder Logic Compliant.

	IEC Compliant	**984 Ladder Logic Compliant**
Momentum Processor Adapters	All	None
Momentum Communication Adapters	All, except 170 NEF 110 21 170 NEF 160 21 170 FNT 110 00 170 FNT 110 01	170 NEF 110 21 170 NEF 160 21 170 FNT 110 00 170 FNT 110 01

Data Mapping

The figure below shows how data is mapped on the I/O base with an IEC Compliant adapter. When the I/O is mapped as discrete points (0x), the MSB is assigned to Pin 1 and the LSB is assigned to Pin 16. When the I/O is mapped as a word/register (4x), the MSB (bit 15) is assigned to Pin 16 and the LSB (bit 0) is assigned to Pin 1.

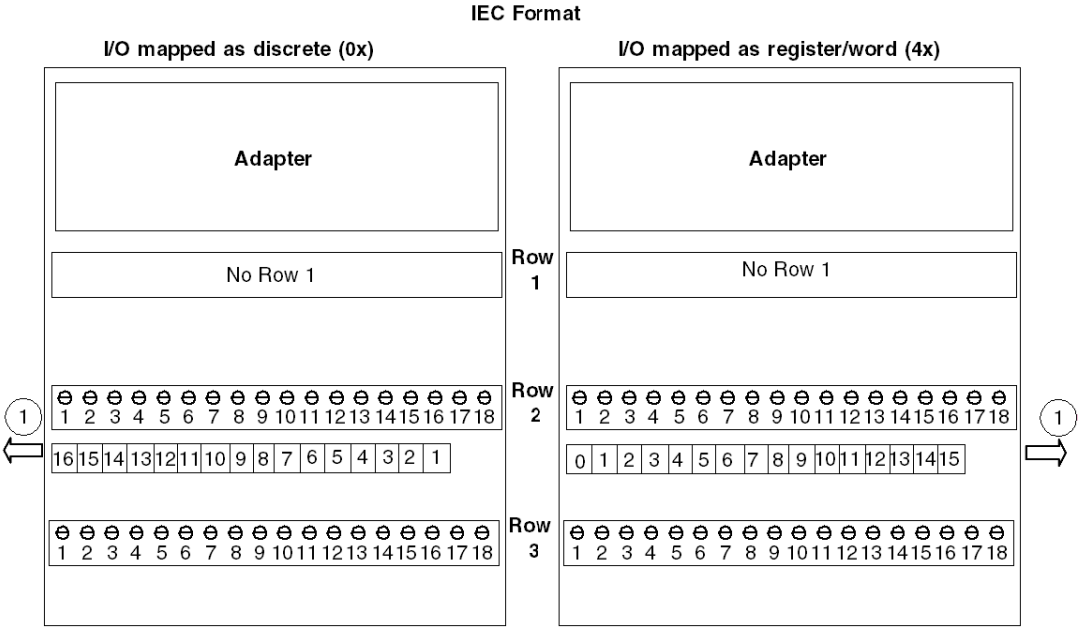

1 outputs

The figure below shows how data is mapped on the I/O base with a Ladder Logic Compliant adapter. When the I/O is mapped as discrete points (0x), the MSB is assigned to Pin 16 and the LSB is assigned to Pin 1. When the I/O is mapped as a word/register (4x), the MSB (bit 15) is assigned to Pin 1 and the LSB (bit 0) is assigned to Pin 16.

984 Format

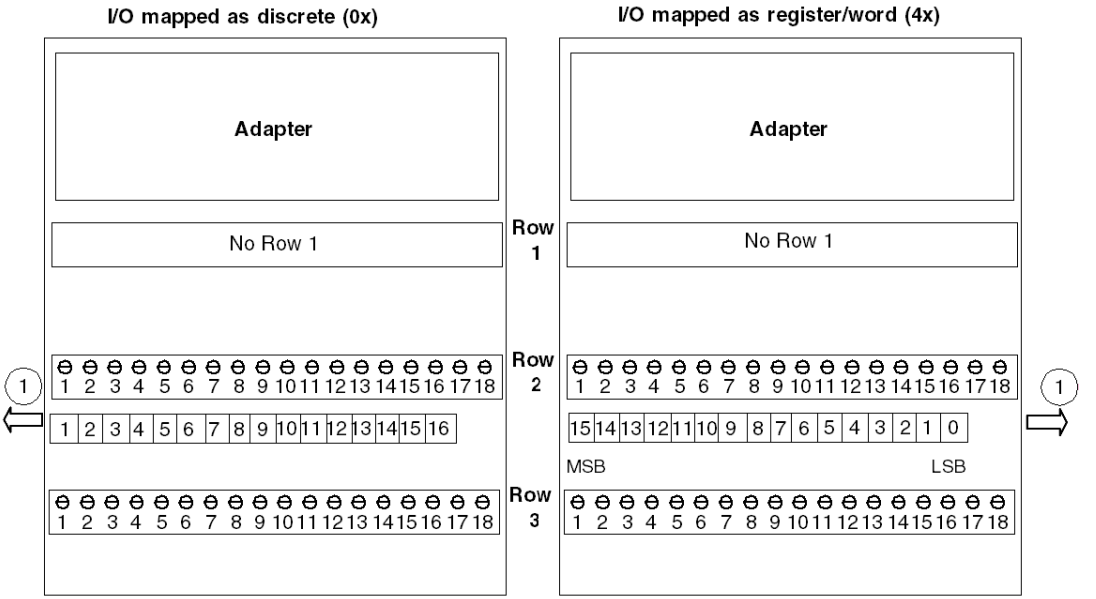

1 outputs

170 ADO 350 00 24 VDC - 32 Pt. Discrete Output Module Base

27

Overview

This chapter describes the 170 ADO 350 00 TSX Momentum I/O base.

What's in this Chapter?

This chapter contains the following topics:

Topic	Page
Front Panel Components	436
Specifications	438
Internal Pin Connections	440
Field Wiring Guidelines	441
Wiring Diagrams	443
I/O Mapping	445

Front Panel Components

Overview

This section contains an illustration of the front panel of the 170 ADO 350 00 I/O base and a description of the LEDs.

Front Panel Illustration

The front panel of the I/O base is shown in the illustration below.

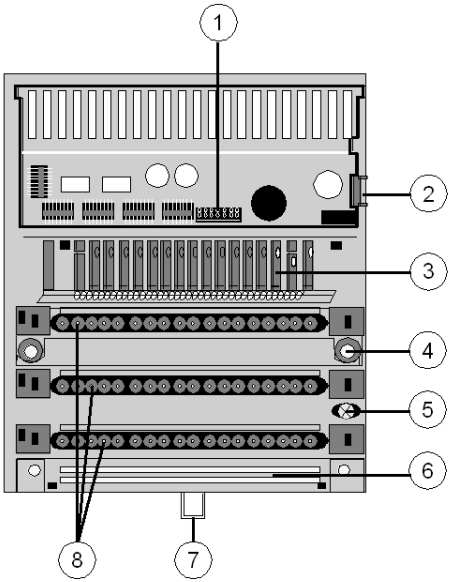

Components of the I/O module

Label	Description
1	Internal interface (ATI) connector
2	Locking and ground contact for the adapter
3	LED status display
4	Mounting holes for panel mount
5	Grounding screw
6	Grounding busbar mounting Slot
7	Locking tab for DIN rail mount
8	Sockets for the terminal connectors

LED Illustration

The LEDs are shown in the illustration below.

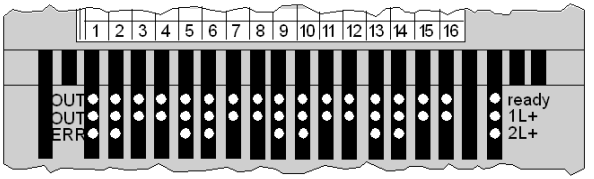

LED Descriptions

The LEDs are described in the table below.

Indicator	Condition	Message
Ready	Green	Module is ready to communicate. Operating voltage for internal logic (5 V) is present.
	Off	Module not ready.
1L+	Green	Output voltage 1L+ of inputs 1 ... 8 (group 1) is present
	Off	Output voltage of inputs 1 ... 8 (group 1) is not present
2L+	Green	Output voltage 2L+ of inputs 9 ... 16 (group 2) is present
	Off	Output voltage of inputs 9 ... 16 (group 2) is not present
Upper row OUT 1...16	Green	Status of outputs 1 ... 16 (an LED per output); Output point active, ie. output carries a 1 signal (logically ON)
	Off	Status of outputs 1 ... 16 (an LED per output); Output point inactive, ie. output carries a 0 signal (logically OFF)
Middle row OUT 1...16	Green	Status of outputs 17 ... 32 (an LED per output); Output point active, ie. output carries a 1 signal (logically ON)
	Off	Status of outputs 17 ... 32 (an LED per output); Output point inactive, ie. output carries a 0 signal (logically OFF)
Lower row ERR 1, 5, 9, 13	Red	Output overload in group 1 (one LED for every 4 outputs). Short circuit or overload on the corresponding output.
	Off	Outputs 1 ... 16 operating normally.
Lower row ERR 2, 6, 10, 14	Red	Output overload in group 2 (one LED for every 4 outputs). Short circuit or overload on the corresponding output.
	Off	Outputs 7 ... 32 operating normally.

Specifications

Overview

This section contains specifications for the 170 ADO 350 00 I/O base.

General Specifications

Module type	32 discrete outputs in 2 groups (16 pts/group)
Supply voltage	24 VDC
Supply voltage range	20...30 VDC
Supply current consumption	max. 250 mA at 24 VDC
Power dissipation	6 W + (# of output points on x .25 W)
I/O map	2 output word

Isolation

Output group to output group	none
Field to communication adapter	Defined by communication adapter type

Fuses

Internal	none
External: operating voltage	1 A slow-blow (Bussmann GDC-1A or equivalent)
External: output voltage	According to the supply of the connected actuators– not to exceed 8 A slow-blow/ group

EMC

Immunity	IEC 1131-2 Surge on auxiliary power supply 500 V
Emissions	EN 50081-2
Agency approvals	UL, CSA, CE, FM Class 1 Div. 2 pending

Physical Dimensions

Width	125 mm (4.9 in)
Depth (with no adapter)	40 mm (1.54 in)
Length	141.5 mm (5.5 in) no or one busbar 159.5mm (6.3in) two busbars 171.5 mm (6.75in) three busbars
Weight	210 g (0.46 lb)

Discrete Outputs

Output type	Solid state switch
Output supply voltage	24 VDC
Output supply voltage range	20 ... 30 VDC
Output voltage	External supply - .5 VDC
Number of points	32
Number of groups	2
Points per group	16
Current capacity	0.5 A/point maximum 8 A/group 16 A/module
Signal type	True High
Leakage current (output out)	< 1 mA @ 24 VDC
Surge (inrush) current	5 A for 1 ms
On state voltage drop	< 0.5 VDC @ 0.5 A
Fault sensing	Outputs are electronically safeguarded to assist in short circuit and overload protection
Fault reporting	1 red LED/point (row 3) ON when short current/ overload occurs
Error indication	Output overload for at least one out put (I/O-Error) to communication adapter
Response time (resistive load / 0.5 A)	< 0.1 ms OFF to ON < 0.1 ms ON to OFF
Maximum switching cycles	1000/h for 0.5 A inductive load 100/s for 0.5 A resistive load 8/s for 1.2 W Tungsten load

Internal Pin Connections

Overview

This section contains an illustration showing the internal connections between terminals on the I/O base and an optional busbar.

Illustration

Rows 1 through 3 show the internal connections between terminals on the I/O base. Row 4 through 6 show the internal connections on the optional busbar.

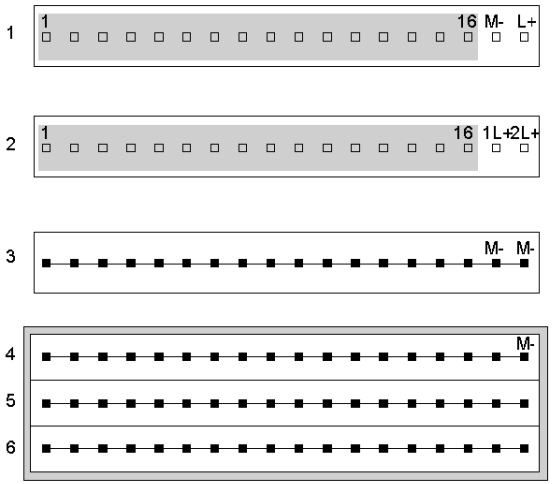

Field Wiring Guidelines

Overview

This section contains wiring guidelines and precautions.

Terminal Connector

To connect field devices to the I/O base, you need a field wiring terminal connector. Schneider Electric sells terminal connectors in sets of three.

Type	Part Number
Screw-in	170 XTS 001 00
Spring-clip	170 XTS 002 00

Busbar May Be Required

Depending on the type of field devices you are using, you may need a 1-, 2-, or 3-row busbar. The following busbars are available from Schneider Electric.

Type	Number of Rows	Part Number
Screw-in	1 - row	170 XTS 006 01
	2 - row	170 XTS 005 01
	3 - row	170 XTS 004 01
Spring-clip	1 - row	170 XTS 007 01
	2 - row	170 XTS 008 01
	3 - row	170 XTS 003 01

Mapping Terminal Blocks

⚠ CAUTION

POTENTIAL FOR SHORT CIRCUITS AND/OR POWER-UP SPIKES

Provide external fuses on the operating voltage to protect the module. Appropriate fuse values are shown in the wiring illustration. An unprotected module may be subject to short circuits and/or power-up spikes.

Failure to follow these instructions can result in injury or equipment damage.

The following table shows mapping terminal blocks and optional busbars

Row	Terminal	Function
1	1...16	Outputs for group 1
	17	Return (M-) for the module
	18	+ 24 VDC Operating voltage (L+)
2	1 ... 16	Outputs for group 2
	17/18	+ 24 VDC for output group 1 (1L+) and group 2 (2L+)
3	1 ... 16	Return (M-)for the outputs
	17/18	Return (M-)for the output groups
4	1 ... 18	Return (M-)
5	1 ... 18	Protective earth (PE)
6	1 ... 18	Protective earth

Protective Circuit May Be Required

When contacted switches are used on the input lines or when lines to the peripherals are very long, the outputs of inductive loads require protective circuitry with a clamping/suppressor diode. Install the protective circuit prallel to the operating coil.

Wiring Diagrams

Overview

This section provides diagrams to assist you in wiring the following types of devices:

- 2-wire actuators
- 3-wire actuators

2-Wire Actuators

The diagram below shows an example of wiring for a 2-wire actuator.

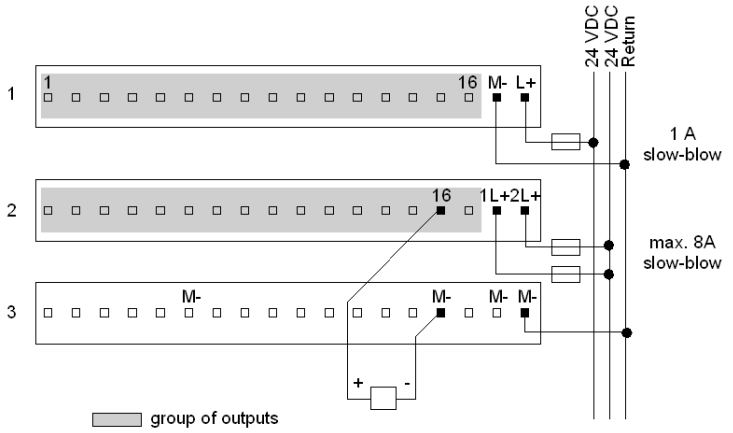

3-Wire Actuator

The diagram below shows an example of wiring for 3-wire actuator.

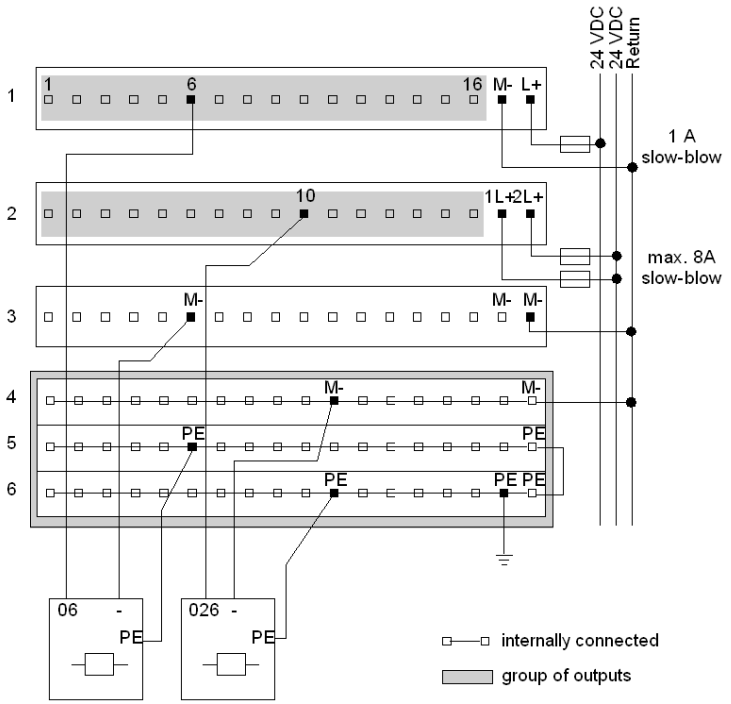

Simplified Schematics

The following diagram shows the field-side output circuitry.

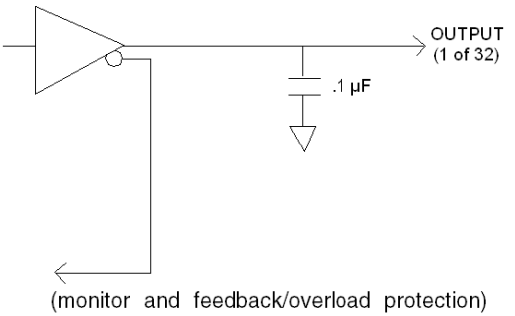

I/O Mapping

Overview

The 170 ADO 350 00 TSX Momentum I/O base supports 32 discrete outputs. This section contains information about the mapping of the I/O data into output words.

I/O Map

The I/O base may be mapped as two output words, or as 32 discrete output points.

IEC vs. Ladder Logic

In order to correctly field wire the outputs and map the output data, you need to know which type of Momentum Adapter is mounted on the base.

Adapters may be either IEC compliant or 984 Ladder Logic compliant.

	IEC Compliant	**984 Ladder Logic Compliant**
Momentum Processor Adapters	All	None
Momentum Communication Adapters	All, except 170 NEF 110 21 170 NEF 160 21 170 FNT 110 00 170 FNT 110 01	170 NEF 110 21 170 NEF 160 21 170 FNT 110 00 170 FNT 110 01

Data Mapping

The figure below shows how data is mapped on the I/O base with an IEC Compliant adapter. When the I/O is mapped as discrete points (0x), the MSB is assigned to Pin 1 and the LSB is assigned to Pin 16. When the I/O is mapped as word or register (4x), the MSB (bit 15) is assigned to Pin 16 and the LSB (bit 0) is assigned to Pin 1.

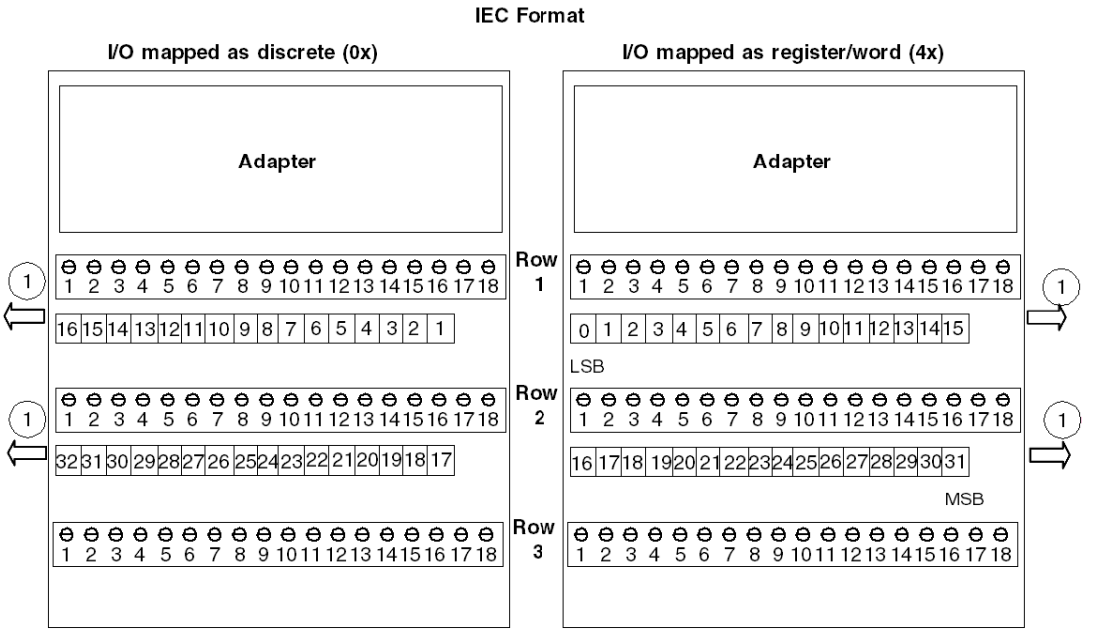

1 outputs

The figure below shows how data is mapped on the I/O base with a Ladder Logic Compliant adapter. When the I/O is mapped as discrete points (0x), the MSB is assigned to Pin 16 and the LSB is assigned to Pin 1. When the I/O is mapped as word or register (4x), the MSB (bit 15) is assigned to Pin 1 and the LSB (bit 0) is assigned to Pin 16.

984 Format

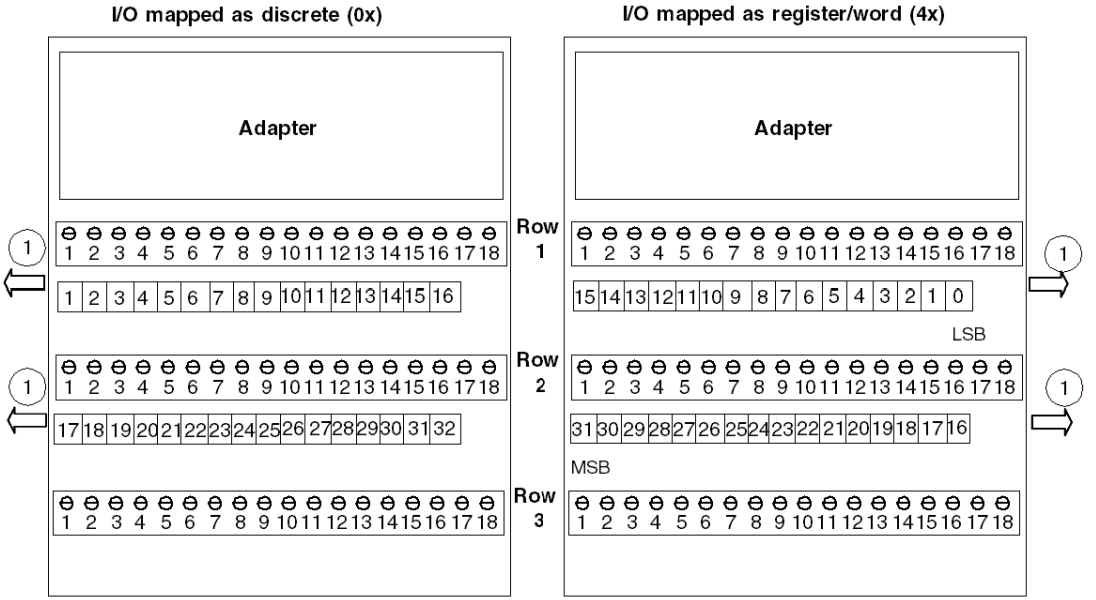

1 outputs

170 ADO 530 50 120 VAC - 8 Point Discrete Output @ 2A Module Base

28

Overview

This chapter describes the 170 ADO 530 50 TSX Momentum I/O base.

What's in this Chapter?

This chapter contains the following topics:

Topic	Page
Front Panel Components	450
Specifications	452
Internal Pin Connections	455
Field Wiring Guidelines	456
Wiring Diagrams	458
I/O Mapping	461

Front Panel Components

Overview

This section contains an illustration of the front panel of the 170 ADO 530 50 I/O base and a description of the LEDs.

Front Panel Illustration

The front panel of the I/O base is shown in the illustration below.

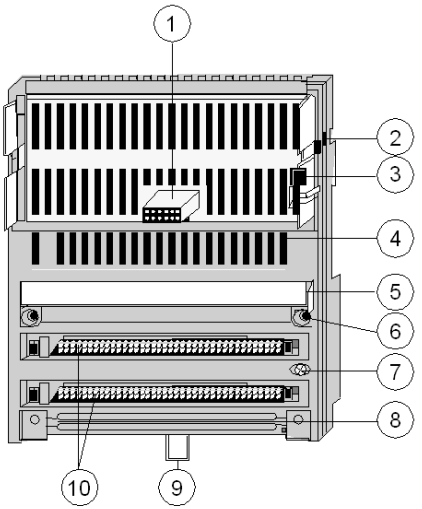

Components of the I/O module

Label	Description
1	Internal interface (ATI) connector
2	Locking tab for the adapter
3	Ground contact for the adapter
4	LED status display
5	Fuses (under the cover)
6	Mounting holes for panel mount
7	Grounding screw
8	BGrounding busbar Mounting Slot
9	Locking tab for DIN rail mount
10	Sockets for the terminal connectors

LED Illustration

The LEDs are shown in the illustration below.

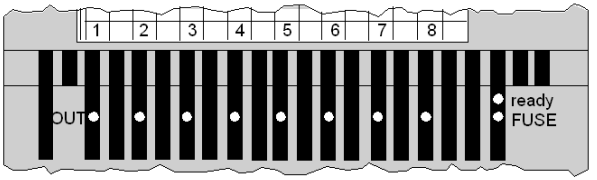

LED Descriptions

The LEDs are described in the table below.

Indicator	Condition	Message
Ready	Green	Module is ready to communicate on network
	Off	Module is not ready to communicate
FUSE	Green	Output voltage is present and fuse 1 and fuse 2 are OK.
	Off	Output voltage is not present or fuse 1 or fuse 2 is not OK.
OUT 1 ... 8	Green	Output status (an LED per output); Output point active, i.e. Output carries a 1 signal (logically ON)
	Off	Output status (an LED per output); Output point inactive, i.e. Output carries a 0 signal (logically OFF)

Specifications

Overview

This section contains specifications for the 170 ADO 530 50 I/O base.

General Specifications

Module type	8 discrete outputs in 2 groups (4 points/group)
Supply voltage	120 VAC
Supply voltage range	85 ... 132 VAC @ 47...63Hz
Supply current consumption	125 mA
Power dissipation	5 W + (# of output points on x 3 W)
I/O map	1 output word

Isolation

Point to point	none
Group to group	none
Field to communication adapter	1780 VAC

Fuses

Internal (replaceable)	5 A slow-blow (Wickmann 195150000 or equivalent)
Internal (non-replaceable)	200 mA slow-blow
External (field power)	10 A slow-blow (Wickmann 195210000 or equivalent)
External (module power)	200 mA slow-blow (Wickmann 195020000 or equivalent)

EMC

Immunity	IEC 1131-2 Surge on auxiliary power supply 2 KV
Emissions	EN 50081-2
Agency approvals	UL, CSA, CE FM Class 1, Div. 2

Physical Dimensions

Width	125 mm (4.9 in)
Depth (with no adapter)	52 mm (2.05 in)
Length	141.5 mm (5.5 in) no or one busbar 159.5mm (6.3in) two busbars 171.5 mm (6.75in) three busbars
Weight	319 g (11.25 oz)

Discrete Outputs

Number of points	8
Number of groups	2 fuse groups, non-isolated
Points per group	4
Output supply voltage	120 AC
Output supply voltage range	85 ... 132 VAC
Output voltage	External supply - 1.5 VAC
Surge voltage	300 VAC for 10 s 400 VAC for 1 cycle
On state voltage drop	1.5 VAC max @ 2 A
Output (load) current	2 A/point (see derating curve) 4 A/group 8 A/module
Minimum output current	5 mA
Maximum surge current (rms)	15 A/point, one cycle 10 A/point, two cycle 5 A/point, three cycle
Output protection	RC snubber
Signal type	True High
Leakage current	1.9 mA @ 120 VAC max
Applied dV / dT	400 V / microsecond
Response time	.5 of one line cycle max OFF to ON .5 of one line cycle max ON to OFF

Derating Curve

The diagram below shows the ambient temperature in relation to the load current per point in amps.

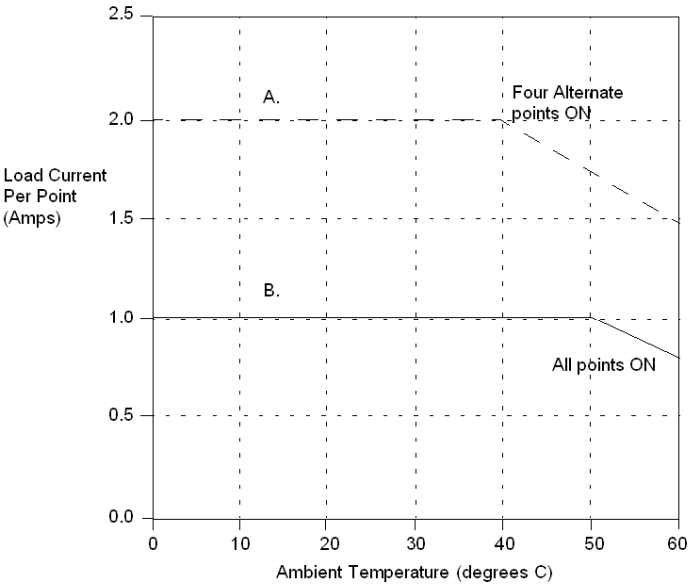

A. Four alternate points. Maximum current per group is 4 A at 0 ... 60 degrees C.

B. All points ON.

Internal Pin Connections

Overview

This section contains an illustration showing the internal connections between terminals on the I/O base and an optional one-row busbar.

Illustration

Rows 1 through 3 show the internal connections between terminalson the I/O base. Row 4 shows the internal connections on the optional busbar.

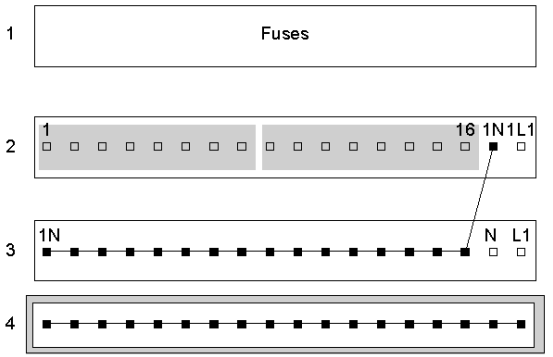

Field Wiring Guidelines

Overview

This section contains wiring guidelines and precautions.

Terminal Connector

To connect field devices to the I/O base, you need a field wiring terminal connector. Schneider Electric sells terminal connectors in sets of three.

Type	Part Number
Screw-in	170 XTS 001 00
Spring-clip	170 XTS 002 00

Busbar May Be Required

Depending on the type of field devices you are using, you may need a 1-row busbar. The following busbars are available from Schneider Electric.

Type	Part Number
Screw-in	170 XTS 006 01
Spring-clip	170 XTS 007 01

Mapping Terminal Blocks

⚠ CAUTION

VOLTAGE SPIKE MAY BE SUFFICIENT TO DAMAGE OR DESTROY MODULE

If an external switch is wired to control an inductive load in parallel with the module output, then an external varistor (Harris V390ZA05 or equivalent) must be wired in parallel with the switch.

Failure to follow these instructions can result in injury or equipment damage.

The following table shows mapping terminal blocks and optional busbars.

Row	Terminal	Function
1	Fuse 1, Fuse 2	Output fuses
2	1, 3, 5, 7	Outputs for group 1
	9, 11, 13, 15	Outputs for group 2
	17	Neutral for outputs (1N)
	18	Line for outputs (1L1)
3	1 ... 16	Neutral for individual outputs (1N)
	17	Neutral 120 VAC for module (N)
	18	Line 120 VAC for module (L1)
4	1 ... 18	Protective earth (PE)

Wiring Diagrams

Overview

This section provides diagrams to assist you in wiring the following types of devices:

- 2-wire field devices
- 3-wire field devices

2-Wire Devices

The diagram below shows an example of wiring for 2-wire devices:

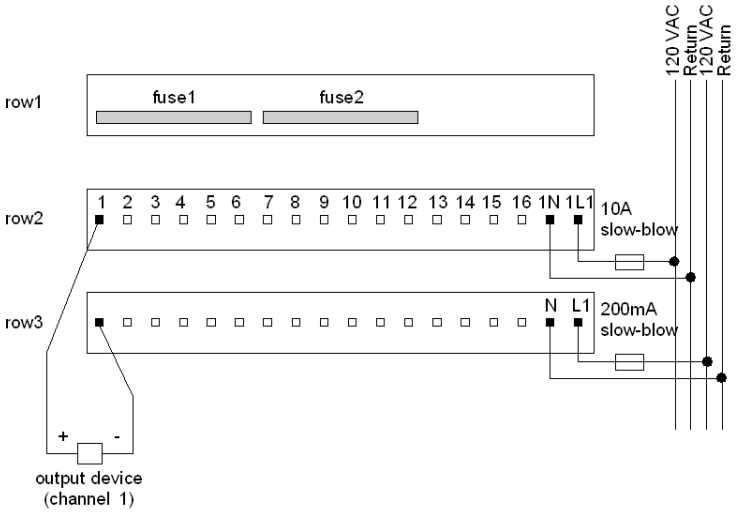

3-Wire Devices

The diagram below shows an example of wiring for 3-wire devices:

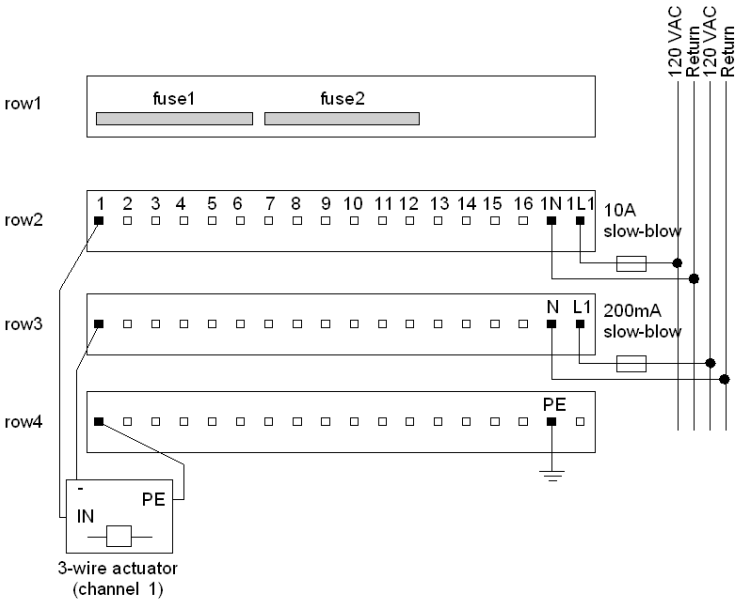

Simplified Schematics

The following diagram shows the field-side output circuitry.

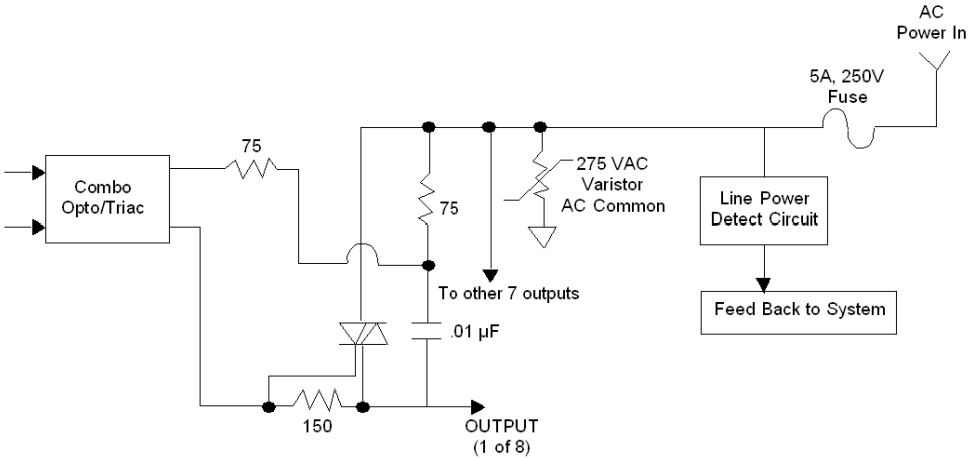

Output Behavior

The snubber circuit is there to protect the triac. When the triac is turned on, it is almost a short and AC voltage and current travels through it to the output. When the triac is not turned on, AC voltage will still pass through the snubber, as AC will pass through a capacitor, but the impedance through the snubber circuit is so high that usually only 5 mA maximum can flow. (This is generally referred to as leakage current.) Read the specifications for the field device to make sure it cannot be turned on by this leakage current.

I/O Mapping

Overview

The 170 ADO 530 50 TSX Momentum I/O base supports 8 discrete outputs. This section contains information about the mapping of the I/O data into output words.

I/O Map

The I/O base may be mapped as one output word, or as 8 discrete output points.

IEC vs. Ladder Logic

In order to correctly field wire the outputs and map the output data, you need to know which type of Momentum Adapter is mounted on the base.

Adapters may be either IEC compliant or 984 Ladder Logic compliant.

	IEC Compliant	**984 Ladder Logic Compliant**
Momentum Processor Adapters	All	None
Momentum Communication Adapters	All, except 170 NEF 110 21 170 NEF 160 21 170 FNT 110 00 170 FNT 110 01	170 NEF 110 21 170 NEF 160 21 170 FNT 110 00 170 FNT 110 01

Data Mapping

The figure below shows how data is mapped on the I/O base with an IEC Compliant adapter. When the I/O is mapped as discrete points (0x), the MSB is assigned to Pin 1. When the I/O is mapped as a word or register (4x) the LSB (bit 0) is assigned to Pin 1.

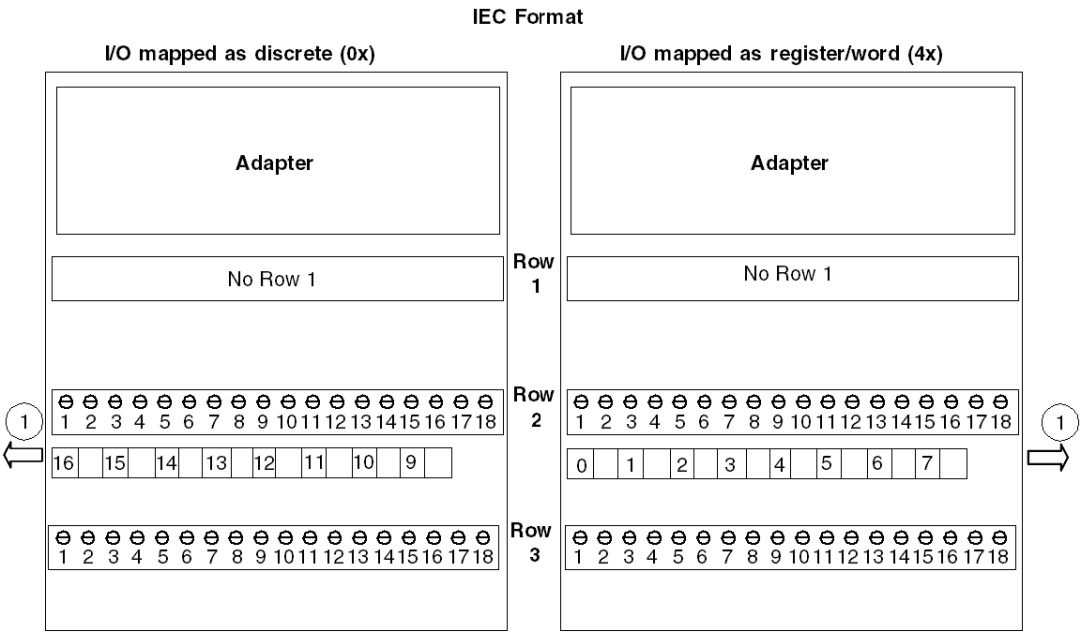

1 outputs

The figure below shows how data is mapped on the I/O base with a Ladder Logic Compliant adapter. When the I/O is mapped as discrete points (0x), the LSB is assigned to Pin 1. When the I/O is mapped as a word or register (4x) the MSB (bit 15) is assigned to Pin 1.

984 Format

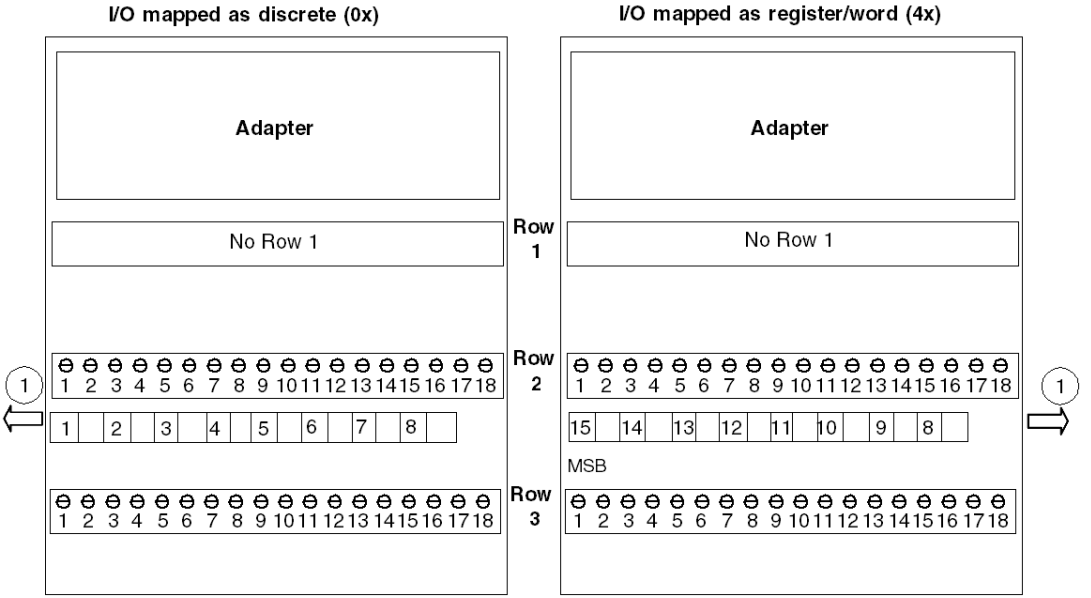

1 outputs

170 ADO 540 50 120 VAC - 16 Point Discrete Output Module Base

29

Overview

This chapter describes the 170 ADO 540 50 TSX Momentum I/O base.

What's in this Chapter?

This chapter contains the following topics:

Topic	Page
Front Panel Components	466
Specifications	468
Internal Pin Connections	471
Field Wiring Guidelines	472
Wiring Diagrams	474
I/O Mapping	477

Front Panel Components

Overview

This section contains an illustration of the front panel of the 170 ADO 540 50 I/O base and a description of the LEDs.

Front Panel Illustration

The front panel of the I/O base is shown in the illustration below.

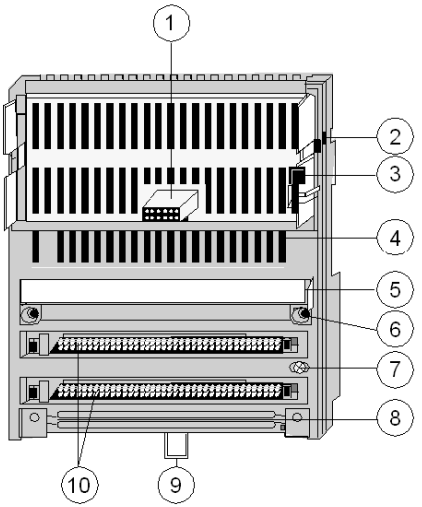

Components of the I/O module

Label	Description
1	Internal interface (ATI) connector
2	Locking tab for the adapter
3	Ground contact for the adapter
4	LED status display
5	Fuses (under the cover)
6	Mounting holes for panel mount
7	Grounding screw
8	Busbar Mounting Slot
9	Locking tab for DIN rail mount
10	Sockets for the terminal connectors

LED Illustration

The LEDs are shown in the illustration below.

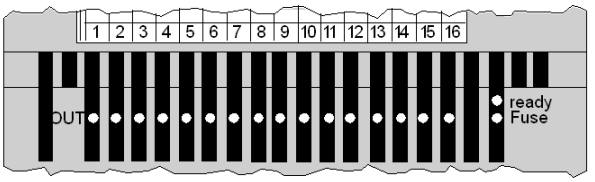

LED Descriptions

The LEDs are described in the table below.

Indicator	Condition	Message
Ready	Green	Module is ready to communicate on network
	Off	Module is not ready to communicate
FUSE	Green	Output voltage is present and fuse 1 and fuse 2 are OK.
	Off	Output voltage is not present or fuse 1 or fuse 2 is not OK.
OUT 1 ... 8	Green	Output status (an LED per output); Output point active, i.e. Output carries a 1 signal (logically ON)
	Off	Output status (an LED per output); Output point inactive, i.e. Output carries a 0 signal (logically OFF)

Specifications

Overview

This section contains specifications for the 170 ADO 540 50 I/O base.

General Specifications

Module type	16 discrete outputs in 2 groups (8 points/group)
Supply voltage	120 VAC
Supply voltage range	85 ... 132 VAC @ 47...63Hz
Supply current consumption	125 mA
Power dissipation	5 W + (# of output points on x .75 W)
I/O map	1 output word

Isolation

Point to point	none
Group to group	none
Field to communication adapter	1780 VAC

Fuses

Internal (replaceable)	5 A slow-blow (Wickmann 195150000 or equivalent)
Internal (non-replaceable)	200 mA slow-blow
External (field power)	10 A slow-blow (Wickmann 195210000 or equivalent)
External (module power)	200 mA slow-blow (Wickmann 195020000 or equivalent)

EMC

Immunity	IEC 1131-2 Surge on auxiliary power supply 2 KV
Emissions	EN 50081-2
Agency approvals	UL, CSA, CE FM Class 1, Div. 2

Physical Dimensions

Width	125 mm (4.9 in)
Depth (with no adapter)	52 mm (2.05 in)
Length	141.5 mm (5.5 in) no or one busbar 159.5mm (6.3in) two busbars 171.5 mm (6.75in) three busbars
Weight	284 g (10 oz)

Discrete Outputs

Number of points	16
Number of groups	2 fuse groups, non-isolated
Points per group	8
Output supply voltage	120 AC
Output supply voltage range	85 ... 132 VAC
Output voltage	External supply - 1.5 VAC
Surge voltage	300 VAC for 10 s 400 VAC for 1 cycle
On state voltage drop	1.5 VAC max @ 0.5 A
Output (load) current	0.5 A/point (see derating curve in next section) 4 A/group 8 A/module
Minimum output current	30 mA
Maximum surge current (rms)	15 A/point, one cycle 10 A/point, two cycle 5 A/point, three cycle
Output protection	RC snubber
Signal type	True High
Leakage current	1.9 mA @ 120 VAC max
Applied dV / dT	400 V / microsecond
Response time	.5 of one line cycle max OFF to ON .5 of one line cycle max ON to OFF

Derating Curve

The diagram depicts the derating curve for this I/O base.

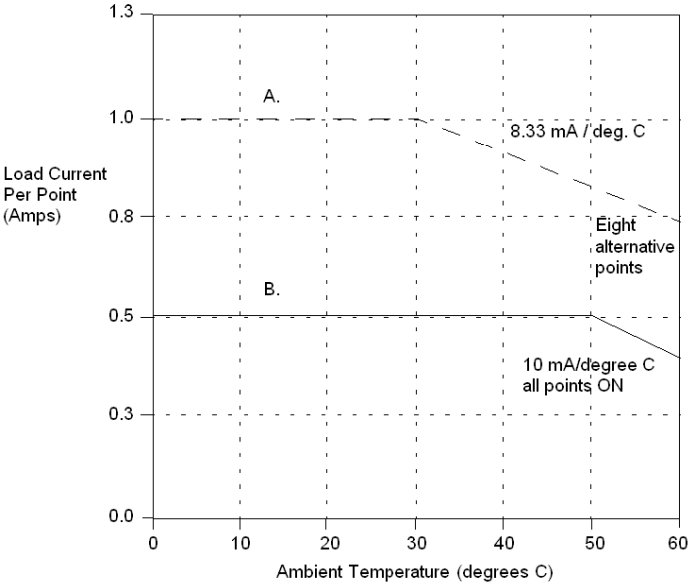

A. Eight alternate points. Maximum current per group is 3 A at 60 degrees C.
B. Sixteen points. Maximum current per point is .4 A at 60 degrees C. Maximum current per group is 3.2 A at 60 degrees C.

Internal Pin Connections

Overview

This section contains an illustration showing the internal connections between terminals on the I/O base and an optional one-row busbar.

Illustration

Rows 1 through 3 show the internal connections between terminalson the I/O base. Row 4 shows the internal connections on the optional busbar.

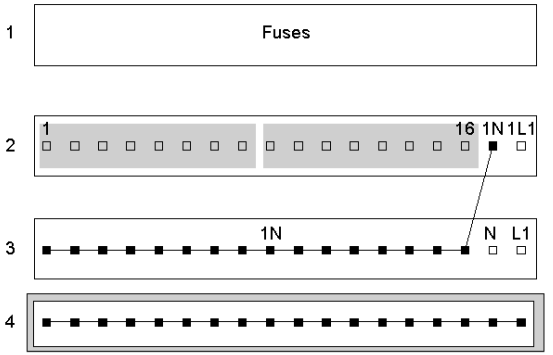

Field Wiring Guidelines

Overview

Inputs are field wired to row 2 of the base. This section contains wiring guidelines and precautions.

Terminal Connector

To connect field devices to the I/O base, you need a field wiring terminal connector. Schneider Electric sells terminal connectors in sets of three.

Type	Part Number
Screw-in	170 XTS 001 00
Spring-clip	170 XTS 002 00

Busbar May Be Required

Depending on the type of field devices you are using, you may need a 1-row busbar. The following busbars are available from Schneider Electric.

Type	Part Number
Screw-in	170 XTS 006 01
Spring-clip	170 XTS 007 01

Mapping Terminal Blocks

⚠ CAUTION

POTENTIAL FOR SHORT CIRCUITS AND/OR POWER-UP SPIKES

Provide external fuses on the operating voltage to protect the module. Appropriate fuse values are shown in the wiring illustration. An unprotected module may be subject to short circuits and/or power-up spikes.

Failure to follow these instructions can result in injury or equipment damage.

The following table shows mapping terminal blocks and optional busbars.

Row	Terminal	Function
1	Fuse 1, Fuse 2	Output fuses
2	1 ... 8	Outputs for group 1
	9 ... 16	Outputs for group 2
	17	Neutral for outputs (1N)
	18	Line for inputs (1L1)
3	1 ... 16	Neutral for individual outputs (1N)
	17	Neutral for module (N)
	18	Line 120 VAC for module (L1)
4	1 ... 18	Protective earth (PE)

Protective Circuit Required

When contacted switches are used on the input lines or when lines to the peripherals are very long, the outputs of inductive loads require protective circuitry with a clamping/suppressor diode. Install the protective circuit prallel to the operating coil.

Wiring Diagrams

Overview

This section provides diagrams to assist you in wiring the following types of devices:

- 2-wire field devices
- 3-wire field devices

2-Wire Devices

The diagram below shows an example of wiring for 2-wire devices:

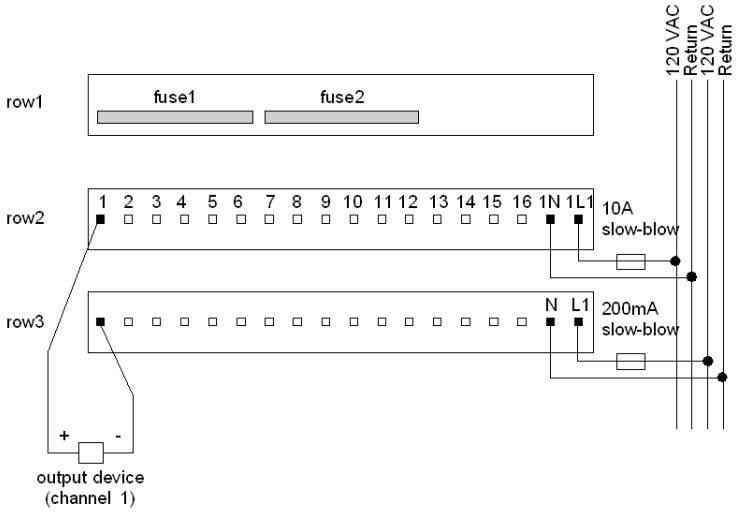

3-Wire Devices

The diagram below shows an example of wiring for 3-wire devices:

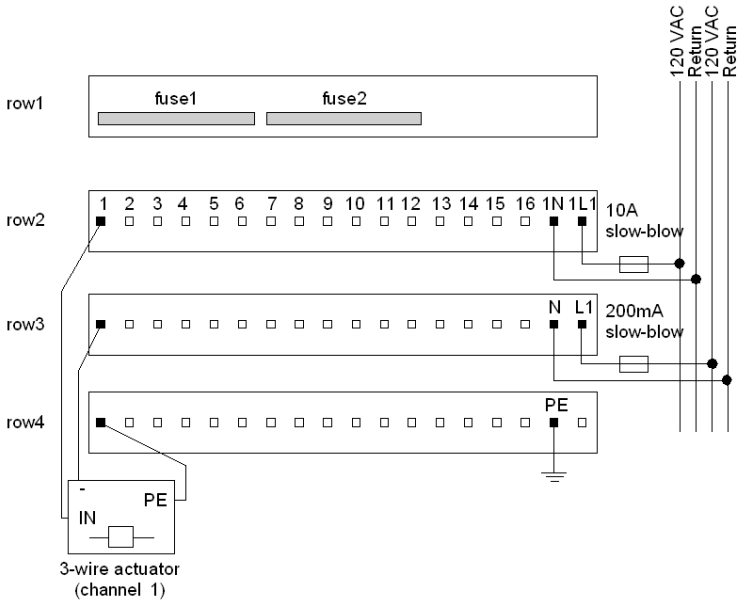

Simplified Schematics

The following diagram shows the field-side output circuitry.

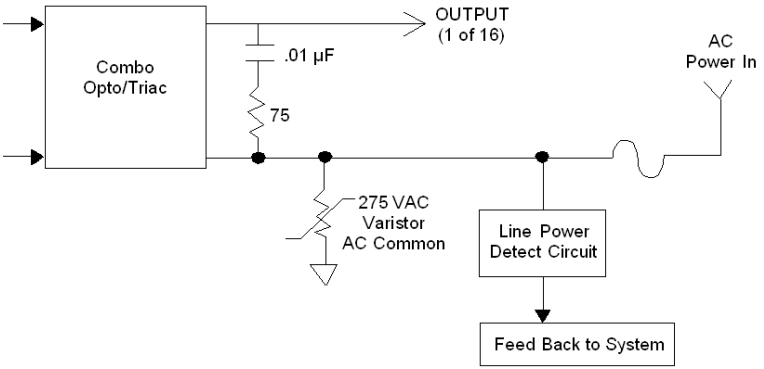

Output Behavior

The snubber circuit is there to protect the triac. When the triac is turned on, it is almost a short and AC voltage and current travels through it to the output. When the triac is not turned on, AC voltage will still pass through the snubber, as AC will pass through a capacitor, but the impedance through the snubber circuit is so high that usually only 5 mA maximum can flow. (This is generally referred to as leakage current.) Read the specifications for the field device to make sure it cannot be turned on by this leakage current.

I/O Mapping

Overview

The 170 ADO 540 50 TSX Momentum I/O base supports 16 discrete outputs. This section contains information about the mapping of the I/O data into output words.

I/O Map

The I/O base may be mapped as one output word, or as 16 discrete output points.

IEC vs. Ladder Logic

In order to correctly field wire the outputs and map the output data, you need to know which type of Momentum adapter is mounted on the base.

Adapters may be either IEC compliant or 984 Ladder Logic compliant.

	IEC Compliant	**984 Ladder Logic Compliant**
Momentum Processor Adapters	All	None
Momentum Communication Adapters	All, except 170 NEF 110 21 170 NEF 160 21 170 FNT 1100 00 170 FNT 1100 01	170 NEF 110 21 170 NEF 160 21 170 FNT 1100 00 170 FNT 1100 01

Data Mapping

The figure below shows how data is mapped on the I/O base with an IEC Compliant adapter. When the I/O is mapped as discrete points (0x) , the MSB is assigned to Pin 1, and the LSB is assigned to Pin 16. When the I/O is mapped as a word or register (4x), the MSB (bit 15) is assigned to Pin 16, and the LSB (bit 0) is assigned to Pin 1.

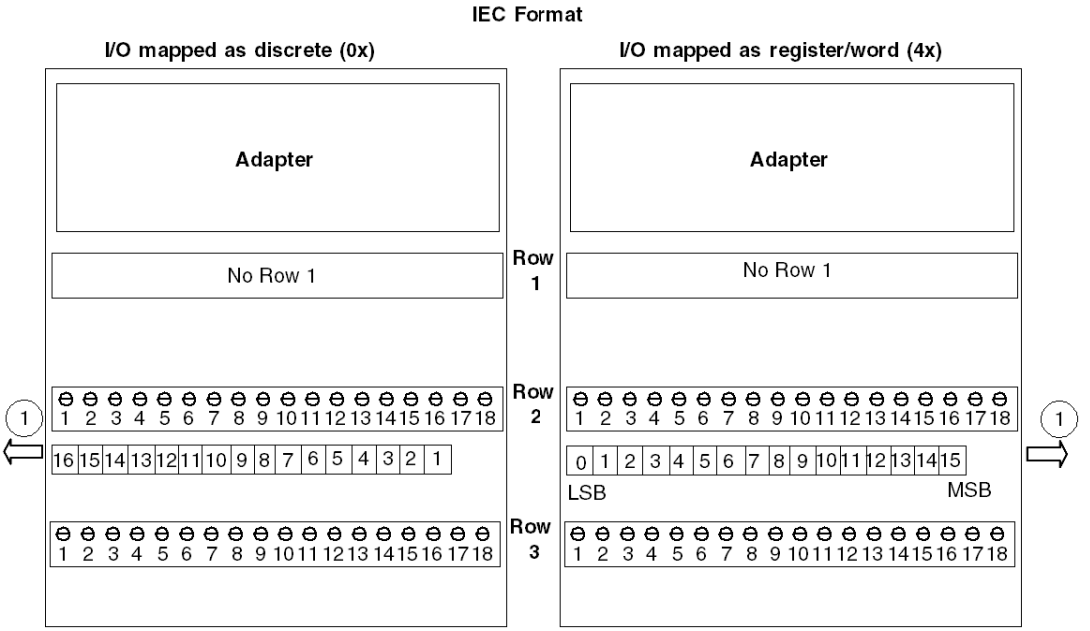

1 outputs

The figure below shows how data is mapped on the I/O base with a Ladder Logic Compliant adapter. When the I/O is mapped as discrete points (0x), the MSB is assigned to Pin 16 and the LSB is assigned to Pin 1. When the I/O is mapped as a word or register (4x), the MSB (bit 15) is assigned to Pin 1, and the LSB (bit 0) is assigned to Pin 16.

984 Format

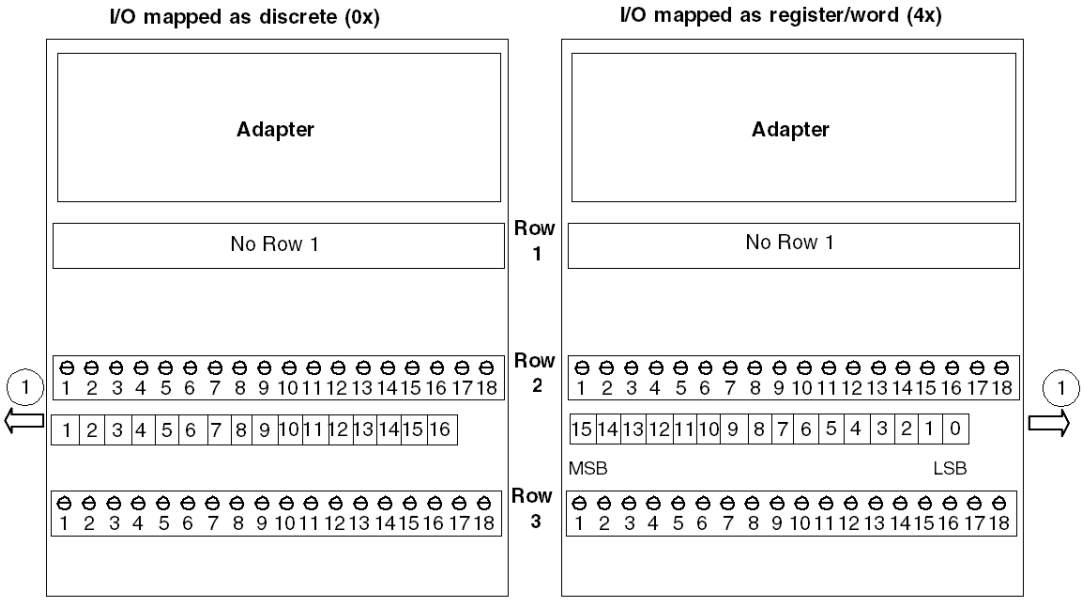

1 outputs

170 ADO 730 50 230 VAC - 8 Point Discrete Output @ 2A Module Base

30

Overview

This chapter describes the 170 ADO 730 50 TSX Momentum I/O base.

What's in this Chapter?

This chapter contains the following topics:

Topic	Page
Front Panel Components	482
Specifications	484
Internal Pin Connections	487
Field Wiring Guidelines	488
Wiring Diagrams	490
I/O Mapping	493

Front Panel Components

Overview

This section contains an illustration of the front panel of the 170 ADO 730 50 I/O base and a description of the LEDs.

Front Panel Illustration

The front panel of the I/O base is shown in the illustration below.

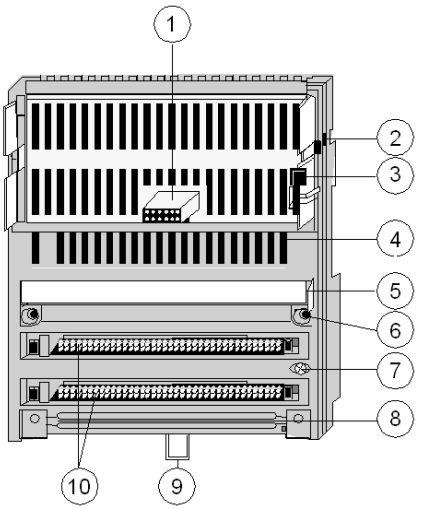

Components of the I/O module

Label	Description
1	Internal interface (ATI) connector
2	Locking tab for the adapter
3	Ground contact for the adapter
4	LED status display
5	Fuses (under the cover)
6	Mounting holes for panel mount
7	Grounding screw
8	Busbar Mounting Slot
9	Locking tab for DIN rail mount
10	Sockets for the terminal connectors

LED Illustration

The LEDs are shown in the illustration below.

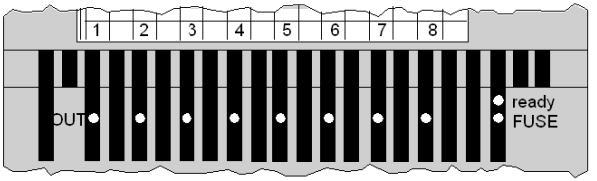

LED Descriptions

The LEDs are described in the table below.

Indicator	Condition	Message
Ready	Green	Module is ready to communicate on network
	Off	Module is not ready to communicate
FUSE	Green	Output voltage is present and fuse 1 and fuse 2 are OK.
	Off	Output voltage is not present or fuse 1 or fuse 2 is not OK.
OUT 1 ... 8	Green	Output status (an LED per output); Output point active, i.e. Output carries a 1 signal (logically ON)
	Off	Output status (an LED per output); Output point inactive, i.e. Output carries a 0 signal (logically OFF)

Specifications

Overview

This section contains specifications for the 170 ADO 730 50 I/O base.

General Specifications

Module type	8 discrete outputs in 2 groups (4 points/group)
Supply voltage	230 VAC
Supply voltage range	170 ... 264 VAC @ 47...63Hz
Supply current consumption	65 mA
Power dissipation	5 W + (# of output points on x 3 W)
I/O map	1 output word

Isolation

Point to point	none
Group to group	none
Field to communication adapter	1780 VAC

Fuses

Internal (replaceable)	5 A slow-blow (Wickmann 195150000 or equivalent)
Internal (non-replaceable)	200 mA slow-blow
External (field power)	10 A slow-blow (Wickmann 195210000 or equivalent)
External (module power)	200 mA slow-blow (Wickmann 195020000 or equivalent)

EMC

Immunity	IEC 1131-2 Surge on auxiliary power supply 2 KV
Emissions	EN 50081-2
Agency approvals	UL, CSA, CE, FM Class 1, Div. 2

Physical Dimensions

Width	125 mm (4.9 in)
Depth (with no adapter)	52 mm (2.05 in)
Length	141.5 mm (5.5 in) no or one busbar 159.5mm (6.3in) two busbars 171.5 mm (6.75in) three busbars
Weight	284 g (10 oz)

Discrete Outputs

Number of points	8
Number of groups	2 fuse groups, non-isolated
Points per group	4
Output supply voltage	230 AC
Output supply voltage range	170 ... 264 VAC
Output voltage	External supply - 1.5 VAC
Surge voltage	300 VAC for 10 s 400 VAC for 1 cycle
On state voltage drop	1.5 VAC max @ 2 A
Output (load) current	2 A/point (see derating curve) 4 A/group 8 A/module
Minimum output current	5 mA
Maximum surge current (rms)	15 A/point, one cycle 10 A/point, two cycle 5 A/point, three cycle
Output protection	RC snubber
Signal type	True High
Leakage current	2.5 mA @ 230 VAC max
Applied dV / dT	400 V / microsecond
Response time	.5 of one line cycle max OFF to ON .5 of one line cycle max ON to OFF

Derating Curve

The diagram below shows the ambient temperature in relation to the load current per point in amps.

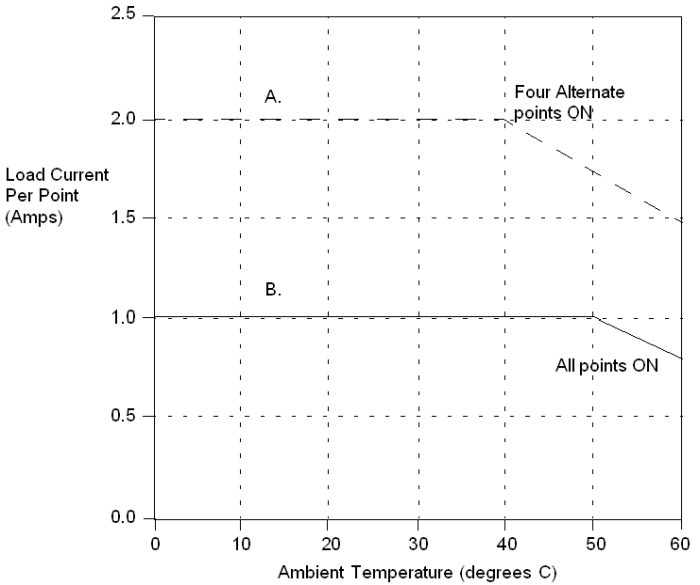

A. Four alternate points. Maximum current per group is 4 A at 0 ... 60 degrees C.

B. All points ON.

Internal Pin Connections

Overview

This section contains an illustration showing the internal connections between terminals on the I/O base and an optional one-row busbar.

Illustration

Rows 1 through 3 show the internal connections between terminals on the I/O base. Row 4 shows the internal connections on the optional busbar.

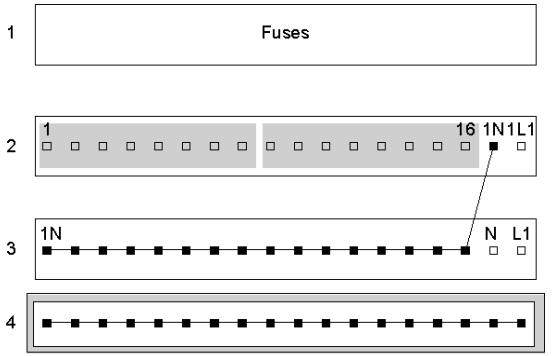

Field Wiring Guidelines

Overview

This section contains wiring guidelines and precautions.

Terminal Connector

To connect field devices to the I/O base, you need a field wiring terminal connector. Schneider Electric sells terminal connectors in sets of three.

Type	Part Number
Screw-in	170 XTS 001 00
Spring-clip	170 XTS 002 00

Busbar May Be Required

Depending on the type of field devices you are using, you may need a 1-row busbar. The following busbars are available from Schneider Electric.

Type	Part Number
Screw-in	170 XTS 006 01
Spring-clip	170 XTS 007 01

Mapping Terminal Blocks

⚠ CAUTION

POTENTIAL FOR SHORT CIRCUITS AND/OR POWER-UP SPIKES

Provide external fuses on the operating voltage to protect the module. Appropriate fuse values are shown in the wiring illustration. An unprotected module may be subject to short circuits and/or power-up spikes.

Failure to follow these instructions can result in injury or equipment damage.

The following table shows mapping terminal blocks and optional busbars.

Row	Terminal	Function
1	Fuse 1, Fuse 2	Output fuses
2	1, 3, 5, 7	Outputs for group 1
	9,11 ,13, 15	Outputs for group 2
	17	Neutral for outputs (1N)
	18	Line for outputs (1L1)
3	1 ... 16	Neutral for individual outputs (1N)
	17	Neutral 120 VAC for module (N)
	18	Line 120 VAC for module (L1)
4	1 ... 18	Protective earth (PE)

Wiring Diagrams

Overview

This section provides diagrams to assist you in wiring the following types of devices:

- 2-wire field devices
- 3-wire field devices

2-Wire Devices

The diagram below shows an example of wiring for 2-wire devices:

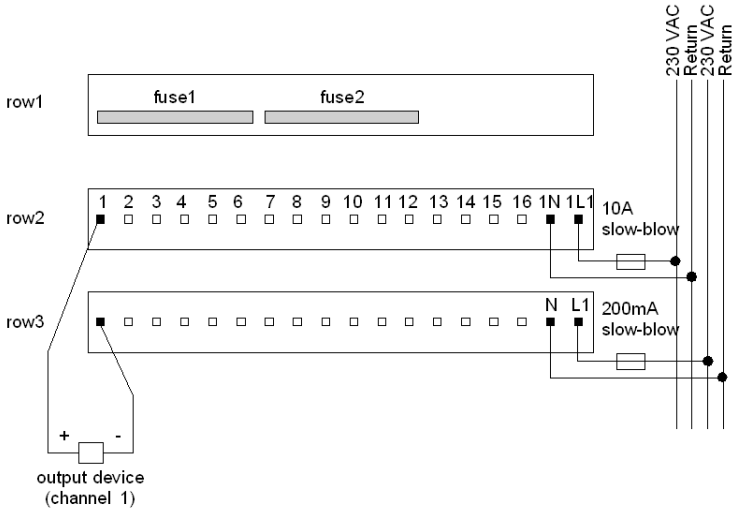

3-Wire Devices

The diagram below shows an example of wiring for 3-wire devices:

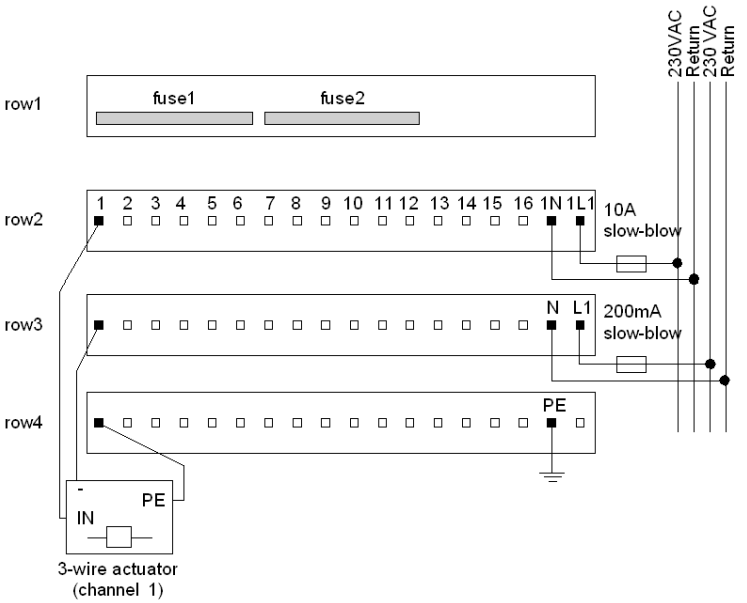

Simplified Schematics

The following diagram shows the field-side output circuitry.

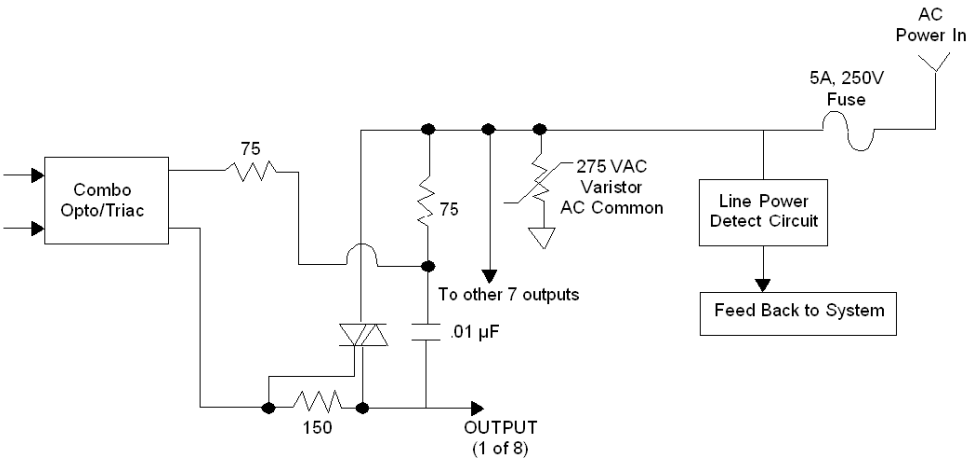

Output Behavior

The snubber circuit is there to protect the triac. When the triac is turned on, it is almost a short and AC voltage and current travels through it to the output. When the triac is not turned on, AC voltage will still pass through the snubber, as AC will pass through a capacitor, but the impedance through the snubber circuit is so high that usually only 5 mA maximum can flow. (This is generally referred to as leakage current.) Read the specifications for the field device to make sure it cannot be turned on by this leakage current.

I/O Mapping

Overview

The 170 ADO 730 50 TSX Momentum I/O base supports 8 discrete outputs. This section contains information about the mapping of the I/O data into output words.

I/O Map

The I/O base may be mapped as one output word, or as 8 discrete output points.

IEC vs. Ladder Logic

In order to correctly field wire the outputs and map the output data, you need to know which type of Momentum Adapter is mounted on the base.

Adapters may be either IEC compliant or 984 Ladder Logic compliant.

	IEC Compliant	**984 Ladder Logic Compliant**
Momentum Processor Adapters	All	None
Momentum Communication Adapters	All, except 170 NEF 110 21 170 NEF 160 21 170 FNT 110 00 170 FNT 110 01	170 NEF 110 21 170 NEF 160 21 170 FNT 110 00 170 FNT 110 01

Data Mapping

The figure below shows how data is mapped on the I/O base with an IEC Compliant adapter. When the I/O is mapped as discrete points (0x), the MSB is assigned to Pin 1. When the I/O is mapped as word or register (4x), the LSB (bit 0) is assigned to Pin 1.

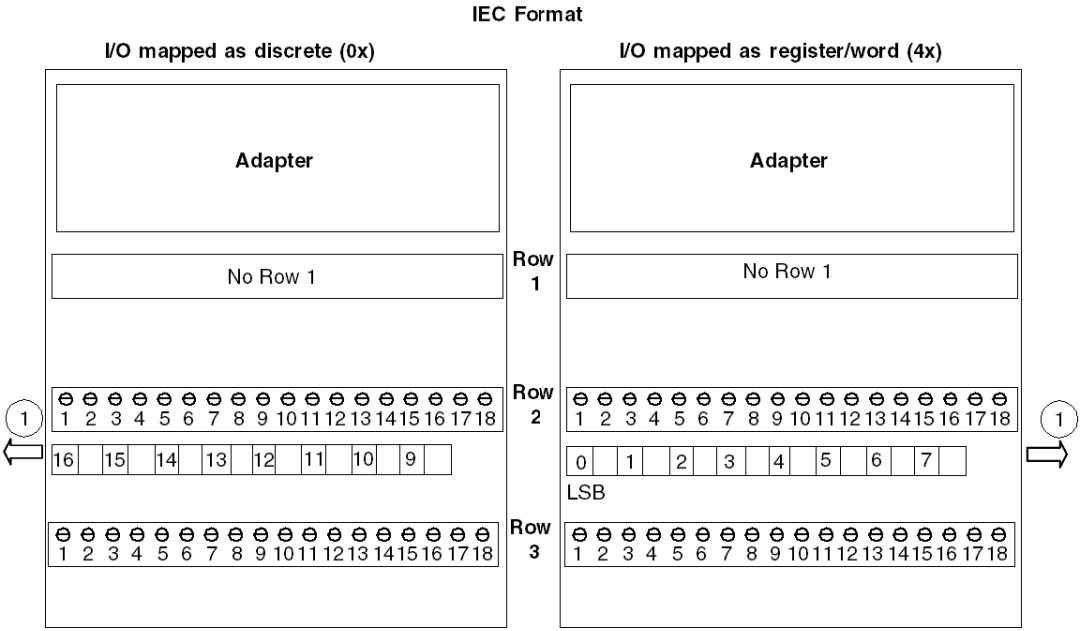

1 outputs

The figure below shows how data is mapped on the I/O base with a Ladder Logic Compliant adapter. When the I/O is mapped as discrete points (0x), the LSB is assigned to Pin 1. When the I/O is mapped as word or register (4x), the MSB (bit 15) is assigned to Pin 1.

984 Format

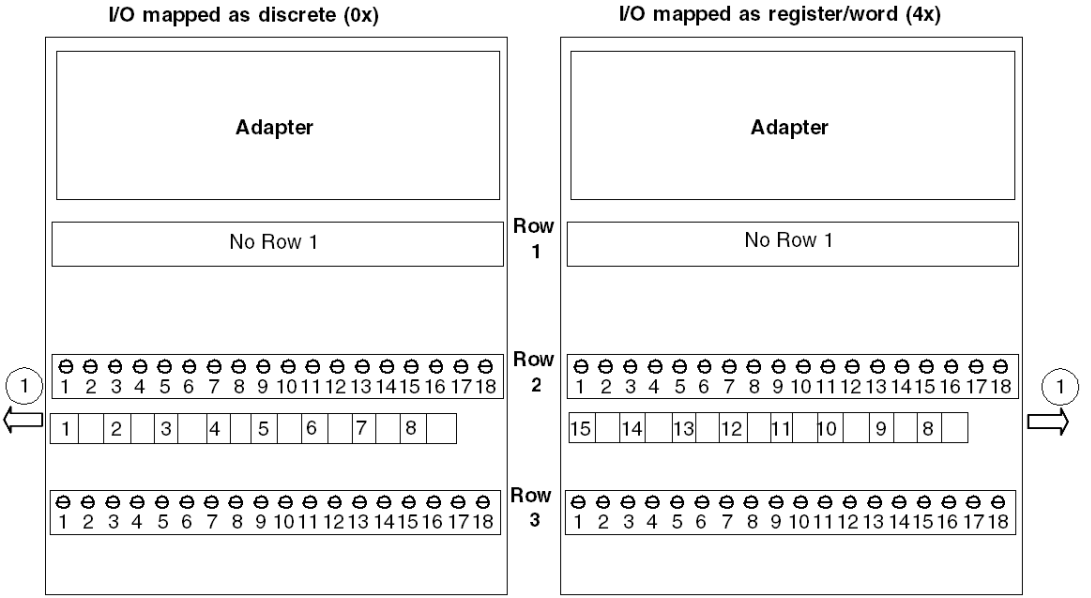

1 outputs

170 ADO 740 50 230 VAC - 16 Point Discrete Output Module Base

31

Overview

This chapter describes the 170 ADO 740 50 TSX Momentum I/O base.

What's in this Chapter?

This chapter contains the following topics:

Topic	Page
Front Panel Components	498
Specifications	500
Internal Pin Connections	503
Field Wiring Guidelines	504
Wiring Diagrams	506
I/O Mapping	509

Front Panel Components

Overview

This section contains an illustration of the front panel of the 170 ADO 740 50 I/O base and a description of the LEDs.

Front Panel Illustration

The front panel of the I/O base is shown in the illustration below.

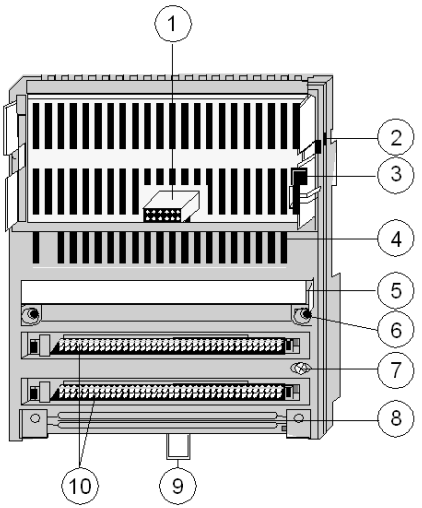

Components of the I/O module

Label	Description
1	Internal interface (ATI) connector
2	Locking tab for the adapter
3	Ground contact for the adapter
4	LED status display
5	Fuses (under the cover)
6	Mounting holes for panel mount
7	Grounding screw
8	Grounding busbar Mounting Slot
9	Locking tab for DIN rail mount
10	Sockets for the terminal connectors

LED Illustration

The LEDs are shown in the illustration below.

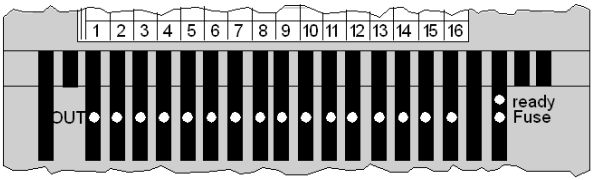

LED Descriptions

The LEDs are described in the table below.

Indicator	Condition	Message
Ready	Green	Module is ready to communicate on network
	Off	Module is not ready to communicate
FUSE	Green	Output voltage is present and fuse 1 and fuse 2 are OK.
	Off	Output voltage is not present or fuse 1 or fuse 2 is not OK.
OUT 1 ... 16	Green	Output status (an LED per output); Output point active, i.e. Output carries a 1 signal (logically ON)
	Off	Output status (an LED per output); Output point inactive, i.e. Output carries a 0 signal (logically OFF)

Specifications

Overview

This section contains specifications for the 170 ADO 740 50 I/O base.

General Specifications

Module type	16 discrete outputs in 2 groups (8 points/group)
Supply voltage	230 VAC
Supply voltage range	170 ... 264 VAC @ 47...63Hz
Supply current consumption	65 mA
Power dissipation	5 W + (# of output points on x .75 W)
I/O map	1 output word

Isolation

Point to point	none
Group to group	none
Field to communication adapter	1780 VAC

Fuses

Internal (replaceable)	5 A slow-blow (Wickmann 195150000 or equivalent)
Internal (non-replaceable)	200 mA slow-blow
External (field power)	10 A slow-blow (Wickmann 195210000 or equivalent)
External (module power)	200 mA slow-blow (Wickmann 1915020000 or equivalent)

EMC

Immunity	IEC 1131-2 Surge on auxiliary power supply 2 KV
Emissions	EN 50081-2
Agency approvals	UL, CSA, CE FM Class 1, Div. 2

Physical Dimensions

Width	125 mm (4.9 in)
Depth (with no adapter)	52 mm (2.05 in)
Length	141.5 mm (5.5 in) no or one busbar 159.5mm (6.3 in) two busbars 171.5 mm (6.75 in) three busbars
Weight	284 g (10 oz)

Discrete Outputs

Number of points	16
Number of groups	2 fuse groups, non-isolated
Points per group	8
Output supply voltage	230 AC
Output supply voltage range	170 ... 264 VAC
Output voltage	External supply - 1.5 VAC
Surge voltage	300 VAC for 10 s 400 VAC for 1 cycle
On state voltage drop	1.5 VAC max @ 2 A
Output (load) current	0.5 A/point (see derating curve) 4 A/group 8 A/module
Minimum output current	30 mA
Maximum surge current (rms)	15 A/point, one cycle 10 A/point, two cycle 5 A/point, three cycle
Output protection	RC snubber
Signal type	True High
Leakage current	2.4 mA @ 230 VAC max
Applied dV / dT	400 V / microsecond
Response time	.5 of one line cycle max OFF to ON .5 of one line cycle max ON to OFF

Derating Curve

The diagram below shows the ambient temperature in relation to the load current per point in amps.

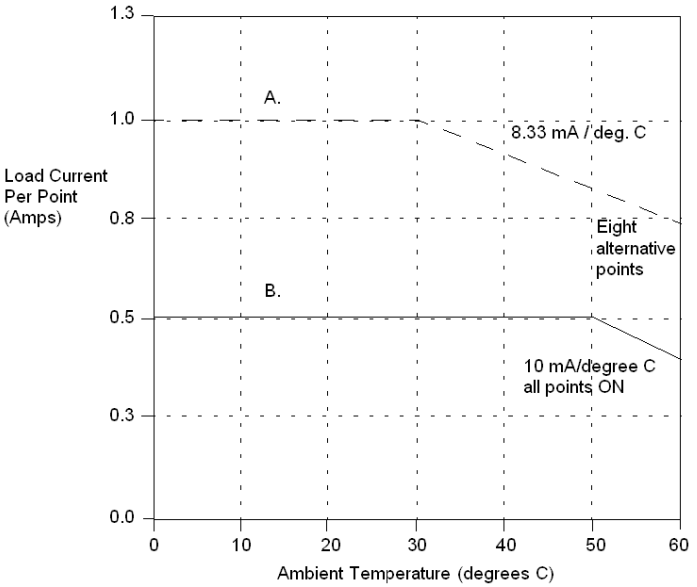

A. Eight alternate points. Maximum current per group is 3 A at 60 degrees C.
B. Sixteen points. Maximum current per point is .4 A at 60 degrees C. Maximum current per group is 3.2 A at 60 degrees C.

Internal Pin Connections

Overview

This section contains an illustration showing the internal connections between terminals on the I/O base and an optional one-row busbar.

Illustration

Rows 1 through 3 show the internal connections between terminalson the I/O base. Row 4 shows the internal connections on the optional busbar.

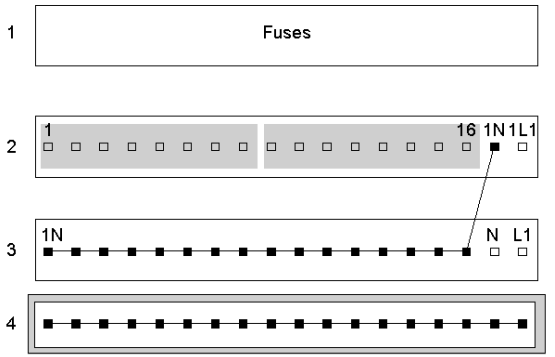

Field Wiring Guidelines

Overview

The outputs are field wired to row 2 of the base. This section contains wiring guidelines and precautions.

Terminal Connector

To connect field devices to the I/O base, you need a field wiring terminal connector. Schneider Electric sells terminal connectors in sets of three.

Type	Part Number
Screw-in	170 XTS 001 00
Spring-clip	170 XTS 002 00

Busbar May Be Required

Depending on the type of field devices you are using, you may need a 1-row busbar. The following busbars are available from Schneider Electric.

Type	Part Number
Screw-in	170 XTS 006 01
Spring-clip	170 XTS 007 01

Mapping Terminal Blocks

⚠ CAUTION

VOLTAGE SPIKE MAY BE SUFFICIENT TO DAMAGE OR DESTROY MODULE

If an external switch is wired to control an inductive load in parallel with the module output, then an external varistor (Harris V390ZA05 or equivalent) must be wired in parallel with the switch.

Failure to follow these instructions can result in injury or equipment damage.

The following table shows mapping terminal blocks and optional busbars.

Row	Terminal	Function
1	Fuse 1, Fuse 2	Output fuses
2	1 ... 8	Outputs for group 1
	9 ... 16	Outputs for group 2
	17	Neutral for outputs (1N)
	18	Line for outputs (1L1)
3	1 ... 16	Neutral for individual outputs (1N)
	17	Neutral 230 VAC for module (N)
	18	Line 230 VAC for module (L1)
4	1 ... 18	Protective earth (PE)

Wiring Diagrams

Overview

This section provides diagrams to assist you in wiring the following types of devices:

- 2-wire field devices
- 3-wire field devices

2-Wire Devices

The diagram below shows an example of wiring for 2-wire devices:

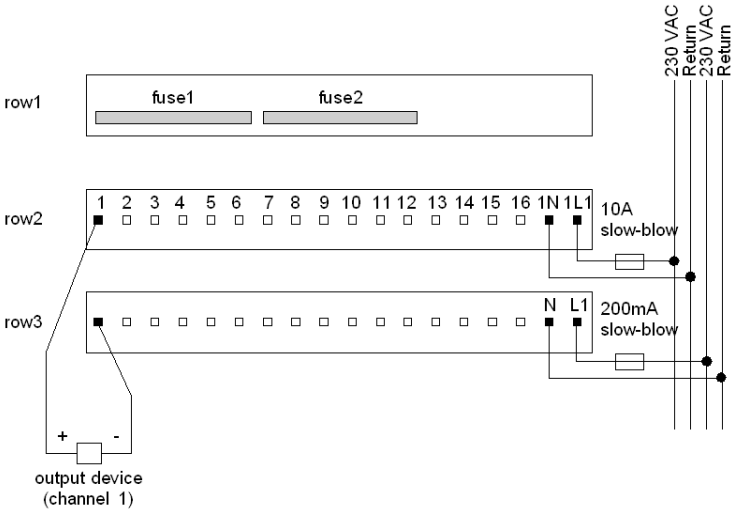

3-Wire Devices

The diagram below shows an example of wiring for 3-wire devices:

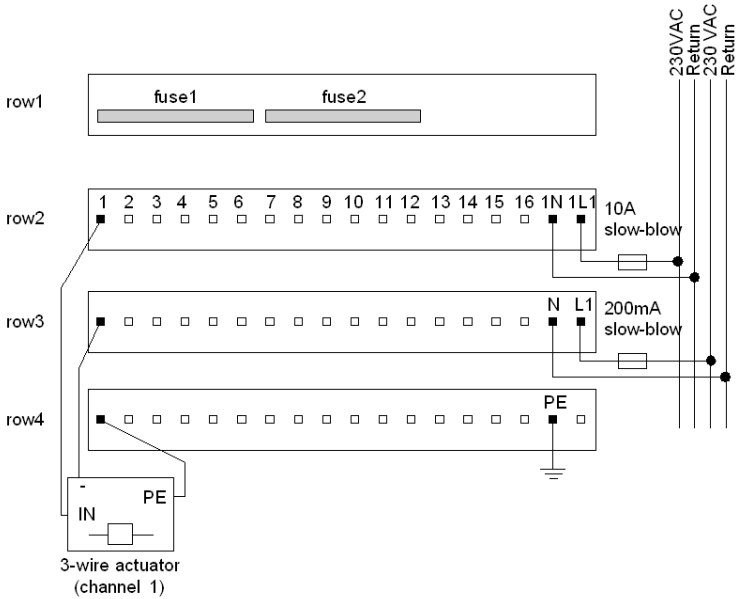

Simplified Schematics

The following diagram shows the field-side output circuitry.

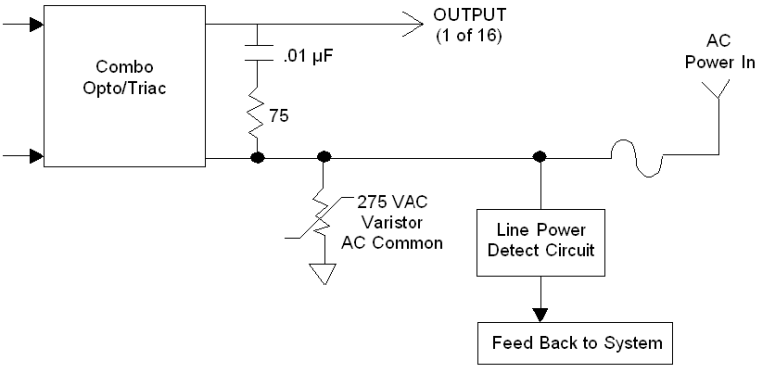

Output Behavior

The snubber circuit is there to protect the triac. When the triac is turned on, it is almost a short and AC voltage and current travels through it to the output. When the triac is not turned on, AC voltage will still pass through the snubber, as AC will pass through a capacitor, but the impedance through the snubber circuit is so high that usually only 5 mA maximum can flow. (This is generally referred to as leakage current.) Read the specifications for the field device to make sure it cannot be turned on by this leakage current.

I/O Mapping

Overview

The 170 ADO 740 50 TSX Momentum I/O base supports 16 discrete outputs. This section contains information about the mapping of the I/O data into output words.

I/O Map

The I/O base may be mapped as one output word, or as 16 discrete output points.

IEC vs. Ladder Logic

In order to correctly field wire the outputs and map the output data, you need to know which type of Momentum Adapter is mounted on the base.

Adapters may be either IEC compliant or 984 Ladder Logic compliant.

	IEC Compliant	**984 Ladder Logic Compliant**
Momentum Processor Adapters	All	None
Momentum Communication Adapters	All, except 170 NEF 110 21 170 NEF 160 21 170 FNT 110 00 170 FNT 110 01	170 NEF 110 21 170 NEF 160 21 170 FNT 110 00 170 FNT 110 01

Data Mapping

The figure below shows how data is mapped on the I/O base with an IEC Compliant adapter. When the I/O is mapped as discrete points (0x), the MSB is assigned to Pin 1 and the LSB is assigned to Pin 16. When the I/O is mapped as a word or register (4x), the MSB (bit 15) is assigned to Pin 16 and the LSB (bit 0) is assigned to Pin 1.

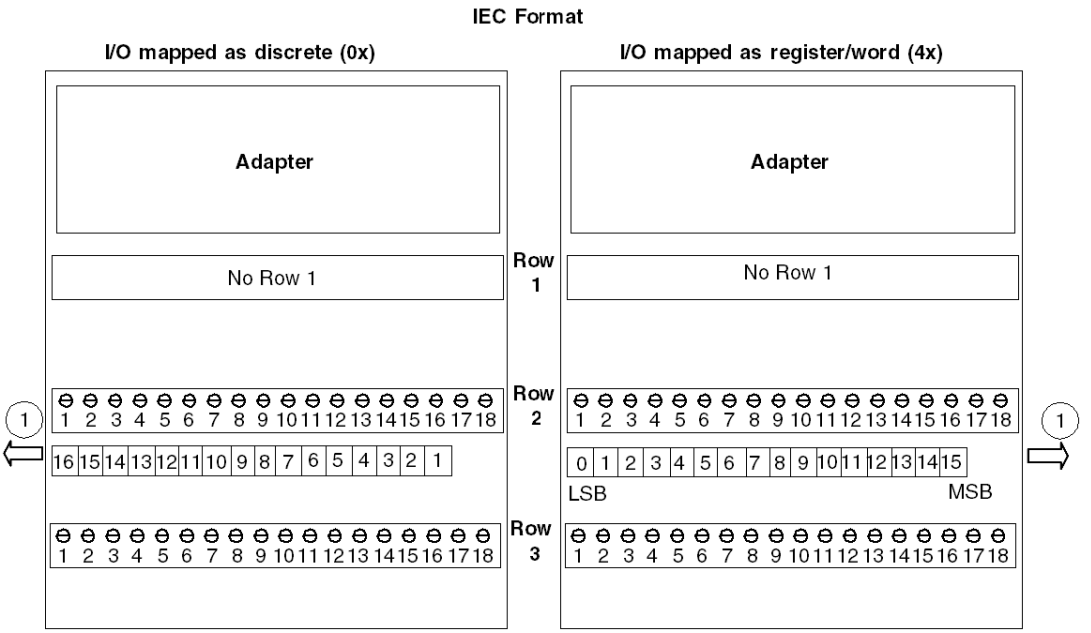

1 outputs

The figure below shows how data is mapped on the I/O base with a 984 Ladder Logic Compliant adapter. When the I/O is mapped as discrete points (0x), the MSB is assigned to Pin 16 and the LSB is assigned to Pin 1. When the I/O is mapped as a word or register (4x), the MSB (bit 15) is assigned to Pin 1 and the LSB (bit 0) is assigned to Pin 16.

984 Format

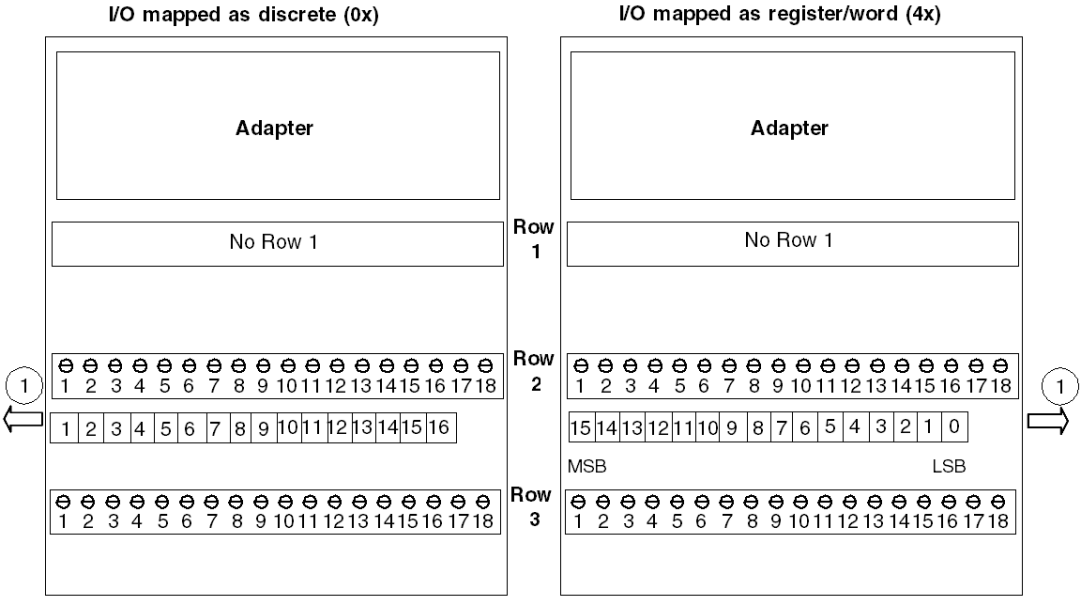

1 outputs

170 ADO 830 30 6 Pt. Relay Out Module Base

32

Overview

This chapter describes the 170 ADO 830 30 Momentum I/O base.

What's in this Chapter?

This chapter contains the following topics:

Topic	Page
Front Panel Components	514
Specifications	516
Internal Pin Connections	519
Field Wiring Guidelines	520
Wiring Diagrams	522
I/O Mapping	524

Front Panel Components

Overview

This section contains an illustration of the front panel of the 170 ADO 830 30 Relay I/O base and a description of the LEDs.

Front Panel Illustration

The front panel of the I/O base is shown below.

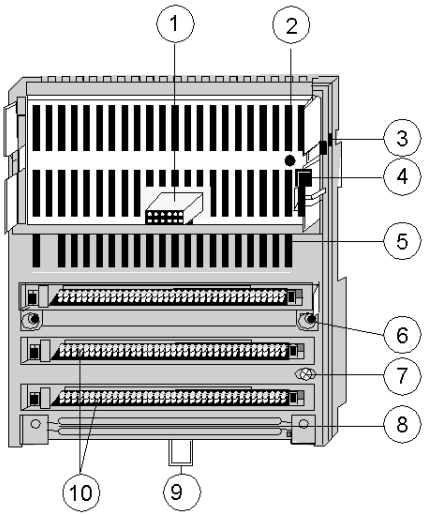

Components of the I/O module

Label	Description
1	Internal interface (ATI) connector
2	Ground nut standoff
3	Locking tab for the adapter
4	Ground contact for the adapter
5	LED status display
6	Mounting holes for panel mount
7	Grounding screw
8	Grounding busbar mounting slot
9	Locking tab for DIN rail mount
10	Sockets for the terminal connectors

LED Illustration

The LEDs are shown in the illustration below.

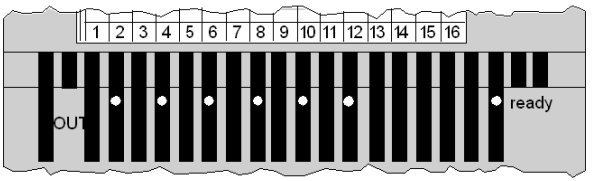

LED Descriptions

The LEDs are described in the table below.

Indicator	Condition	Message
Ready	Green	Module is ready to communicate. Operating voltage for internal logic (5 V) is present.
	Off	Module not ready.
OUT 2,4,6,8,10, 12	Green	Output status (an LED per output); Output point active, (logically ON): For Normally Closed (N/C) Relay wiring, the output relay opens. For Normally Open (N/O) Relay wiring, the output relay closes.
	Off	Output status (an LED per output); Output point inactive, (logically OFF): For Normally Closed (N/C) Relay wiring, the output relay is closed. For Normally Open (N/O) Relay wiring, the output relay is opened.

Specifications

Overview

This section contains specifications for the 170 ADO 830 30 I/O base.

General Specifications

Module type	6 relay outputs normally open /normally closed
Module supply voltage	120 to 230 VAC
Module supply current consumption	125 mA at 120 VAC; 65 mA at 230 VAC
Power dissipation	15 W
I/O map	1 output word

Isolation

Output to output	1780 VAC RMS for 1 minute
Field to logic	1780 VAC RMS for 1 minute 2500 VDC RMS for 1 minute
Field to Protective Earth	1780 VAC RMS for 1 minute
Field to communication adapter	Defined by communication adapter type

Fuses

Internal	none
External: operating voltage (L+)	315 mA fast-blow (Wickman1930315000)

EMC

Immunity	IEC 1131-2 Surge on auxiliary power supply AC 2 KV to PE, 1 KV to differential surge on auxiliary power supply DC 0.5 KV.
Emissions	EN 50081-2
Agency approvals	UL, CSA, CE FM Class 1 Div.2 pending

Physical Dimensions

Width	125 mm (4.9 in)
Depth (with no adapter)	40 mm (1.54 in)
Length	141.5 mm (5.5 in) with or without one busbar 159.5mm (6.3 in) two busbars 171.5 mm (6.75 in) three busbars
Weight	260 g (0.57lb)

Relay Outputs

Output type	Form C relay, NO/NC contact
Relay contact material	Gold lash over silver alloy
Number of points	6
Number of groups	6
Points per group	1
Switched Output Voltage	
AC	20-250 VAC
DC	30-150 VDC
Maximum Load Current	
AC	5A @ 250 VAC @ 60 degrees C resistive load 2A Tungsten lamp load 3A @ power factor 0.4
DC	300mA resistive @ 60 degree C resistive load 100mA (L/R=10msec) 5A @ 5-30VDC @ 60 degrees C resistive load

Minimum Load Current	
AC	0.5mA
DC	0.5mA
Maximum surge current	20A each point (cap. load @ 10 ms.)
Maximum switching capability	1250 VAC (resistive load)
Maximum module current	21A at 60 degrees C 25A at 30 degrees C
Output leakage current	< 100 microamps
Fault sensing	None
Fault reporting	None
Error indication	None
Response time	10 ms @ 60 Hz OFF to ON 20 ms @ 60 Hz ON to OFF
Maximum switching cycles	> 30 x 10^6 (mechanical) >=1 x 10^5 (inductive load with external protective circuitry)

Internal Pin Connections

Overview

This section contains an illustration of the I/O base.

Illustration

There are no internal connections between terminals on the I/O base.

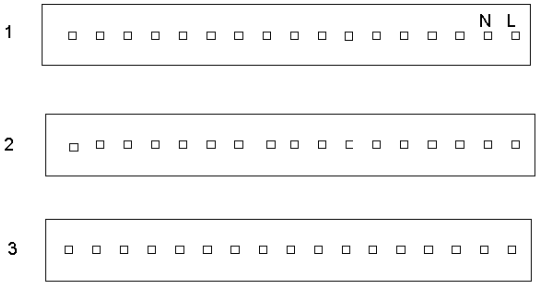

Field Wiring Guidelines

Overview

This section contains wiring guidelines and precautions.

Terminal Connector

With respect to the terminal connector, the guidelines are as follows:

- Screw type, 17 pin, field connectors are included with this module and do not have to be ordered separately.
- Note that pin 1 has been removed and the connector begins at pin 2.
- 18 pin connectors that are used on other Momentum I/O Bases, cannot be used with this module.

Busbar May Be Required

Depending on the type of field devices you are using, you may need a 1-row busbar. The following busbars are available from Schneider Automation.

Type	Part Number
Screw-in	170 XTS 006 01
Spring-clip	170 XTS 007 01

Mapping Terminal Blocks

⚠ CAUTION

POTENTIAL FOR SHORT CIRCUITS AND/OR POWER-UP SPIKES

Provide external fuses on the operating voltage to protect the module. Appropriate fuse values are shown in the wiring illustration. An unprotected module may be subject to short circuits and/or power-up spikes.

Failure to follow these instructions can result in injury or equipment damage.

The following table shows mapping terminal blocks and optional busbars.

Row	Terminal	Function
1	2,4,6,8,10,12	Relay Output 1 through 6 (normally open)
	17	module neutral
	18	120 to 230 VAC module power
2	2,4,6,8,10,12	Relay Output 1 through 6 (normally closed)
3	2,4,6,8,10,12	Relay Output Common 1 through 6
4	1 ... 18	Protective earth (PE)

Protective Circuit Required

When contacted switches are used on the input lines or when lines to the peripherals are very long, the outputs of inductive loads require protective circuitry with a clamping/suppressor diode. Install the protective circuit parallel to the operating coil.

Wiring Diagrams

Overview

This section provides a diagram to assist you in wiring a 2-wire actuator.

2-Wire Actuator

The diagram below shows field wiring for 2-wire 120 VAC actuators using a normally open and normally closed relay output.

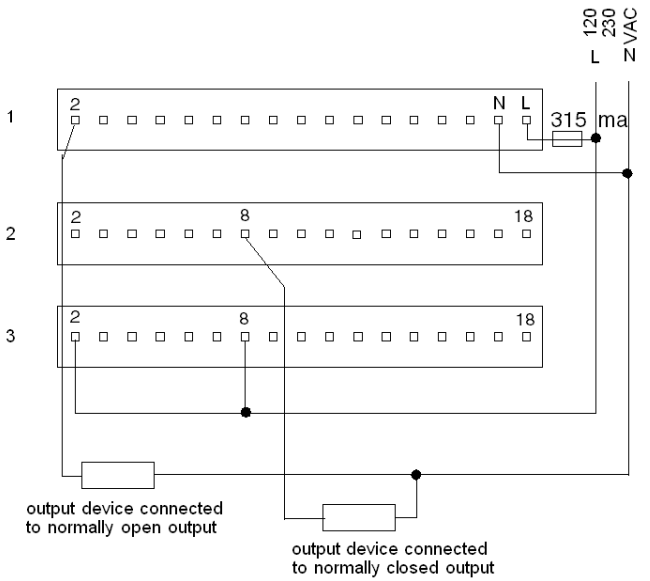

NOTE: The 6 relay outputs are individually isolated. This allows for the use of separate power sources for each output if individual isolation is required.

Simplified Output Schematics

The following diagram shows the relay output circuitry.

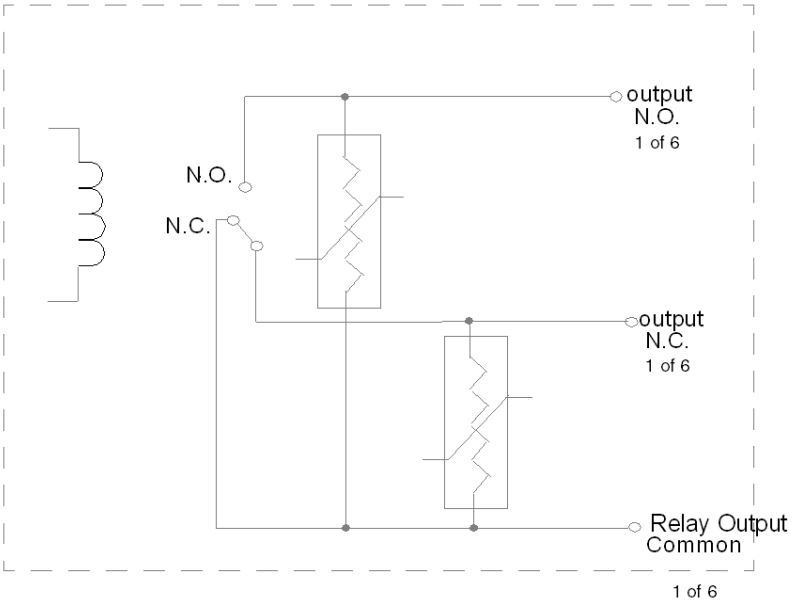

I/O Mapping

Overview

The 170 ADO 830 30 TSX Momentum I/O base supports 6 relay outputs. This section contains information about the mapping of the I/O data into one output word.

I/O Map

The I/O base may be mapped as one output word, or as 16 discrete output points.

IEC vs. Ladder Logic

In order to correctly field wire the outputs and map the output data, you need to know which type of Momentum Adapter is mounted on the base.

NOTE: Pin 1 of the module has been eliminated and the relay begins with pin 2. The field connectors come with the relay module and do not need to be ordered separately.

Adapters may be either IEC compliant or 984 Ladder Logic compliant.

	IEC Compliant	**984 Compliant**
Momentum Processor Adapters	All	None
Momentum Communication Adapters	All, except 170 NEF 110 21 170 NEF 160 21 170 FNT 110 00 170 FNT 110 01	170 NEF 110 21 170 NEF 160 21 170 FNT 110 00 170 FNT 110 01

Data Mapping

The figure below shows how data is mapped on the I/O base with an IEC Compliant adapter. When the I/O is mapped as discrete points (0x), the MSB is assigned to Pin 2. When I/O is mapped as a word or register (4x), the LSB (bit 0) is assigned to Pin 2.

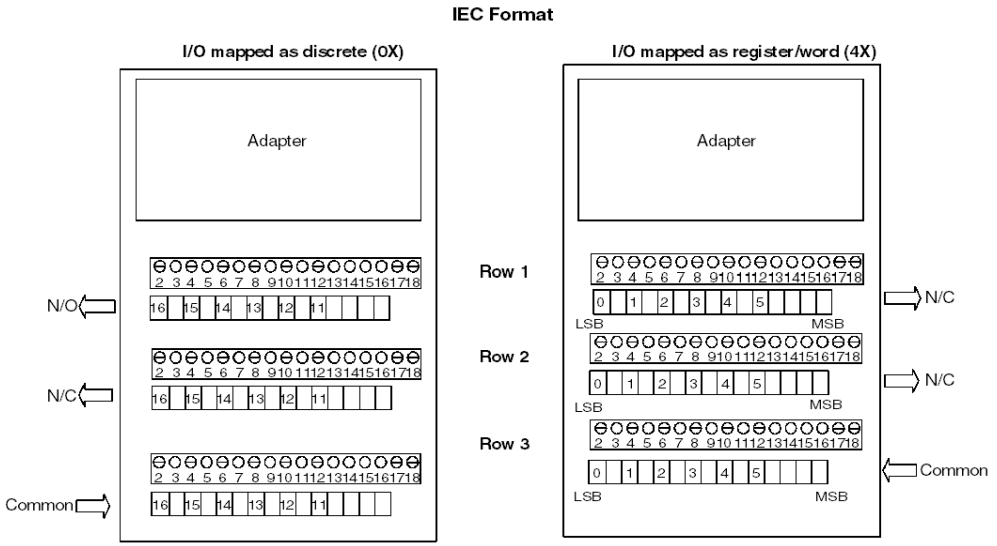

NOTE: The terminal connectors have the following features:

- Screw type, 17 pin, field connectors that are included with this module and do not have to be purchased separately.
- Pin 1 has been removed and the connector begins at pin 2.
- 18 pin connectors that are used on other Momentum I/O Bases, cannot be used with this module.
- Connector part number: 170XTS01000 (contains 3 connectors).

Data Mapping

The figure below shows how data is mapped on the I/O base with a 984 Ladder Logic Compliant adapter. When the I/O is mapped as discrete points (0x), the LSB is assigned to Pin 2. When I/O is mapped as a word or register (4x), the MSB (bit 15) is assigned to Pin 2.

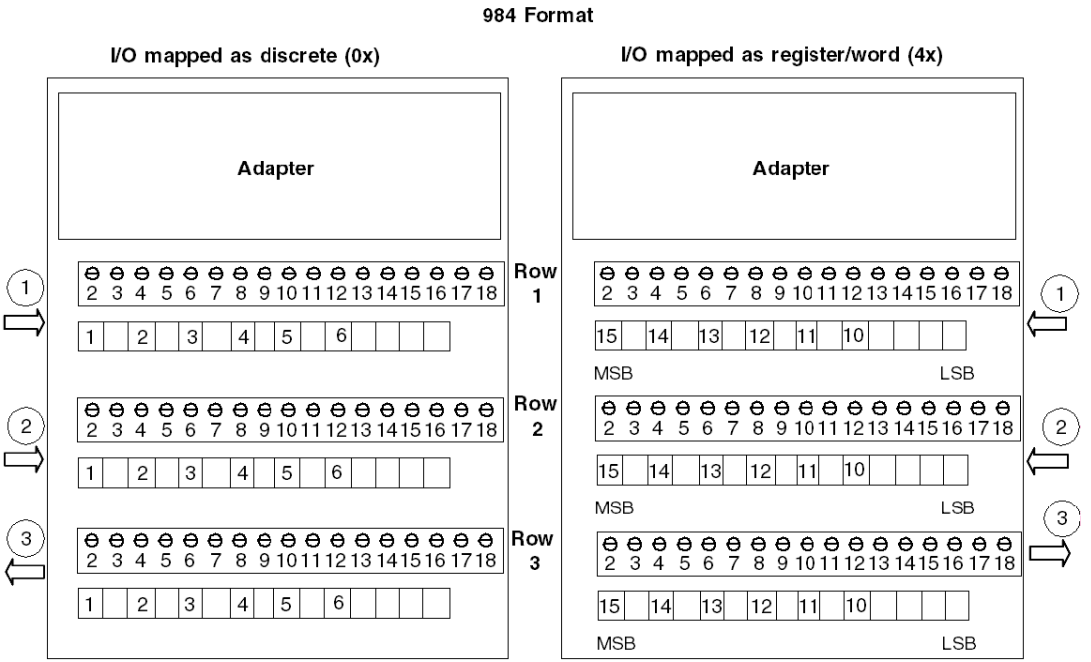

1 NO
2 NC
3 Common

NOTE: The terminal connectors have the following features:

- Screw type, 17 pin, field connectors that are included with this module and do not have to be purchased separately.
- Pin 1 has been removed and the connector begins at pin 2.
- 18 pin connectors that are used on other Momentum I/O Bases, cannot be used with this module.
- Connector part number : 170XTS01000 (contains 3 connectors).

170 AMM 090 00 Analog 4 Ch. In / 2 Ch. Out Module Base w/ 24 VDC I/O Pts

33

Overview

This chapter describes the 170 AMM 090 00 TSX Momentum I/O base. See also 170 AMM 090 01 *(see page 557)*.

What's in this Chapter?

This chapter contains the following topics:

Topic	Page
Front Panel Components	528
Specifications	530
Internal Pin Connections	534
Field Wiring Guidelines	535
Wiring Diagrams	537
I/O Mapping	540
Analog Channel Parameters	542
Analog Outputs	545
Analog Inputs	546
Discrete Inputs and Outputs	547
Input Measuring Ranges	548
Error Messages	554

Front Panel Components

Overview

This section contains an illustration of the front panel of the 170 AMM 090 00 I/O base and a description of the LEDs.

Front Panel Illustration

The front panel of the I/O base is shown in the illustration below.

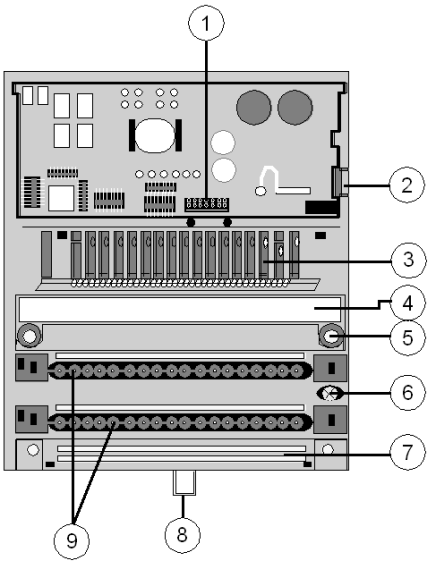

Components of the I/O module

Label	Description
1	Internal interface (ATI) connector
2	Ground contact for the adapter
3	LED status display
4	Protective cover
5	Mounting holes for panel mount
6	Grounding screw
7	Busbar Mounting Slot
8	Locking tab for DIN rail mount
9	Sockets for the terminal connectors

LED Illustration

The LEDs are shown in the illustration below.

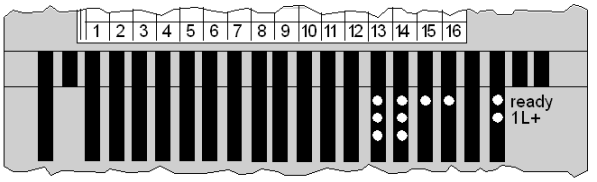

LED Descriptions

The LEDs are described in the table below.

Indicator	Condition	Message
Ready	Green	Module is ready to communicate on network. Operating voltage for internal logic is present and self-test has been passed.
	Off	Module is not ready.
1L+	Green	Supply voltage for outputs 1, 2 applied.
	Off	Supply voltage for outputs 1, 2 not applied.
Top row 13 ... 16	Green	Discrete input status (an LED per input). Input point active, i.e. input carries "1" signal (logically "ON").
	Off	Discrete input status (an LED per input). Input point inactive, i.e. input carries "0" signal (logically "OFF").
Middle row 13 , 14	Green	Discrete output status (an LED per output). Output point active, i.e. output carries "1" signal (logically "ON").
	Off	Discrete output status (an LED per output). Output point inactive, i.e. output carries "0" signal (logically "OFF").
Bottom row 13 , 14	Red	Discrete output overload (one LED per output). Output concerned short-circuited or overloaded.
	Off	Discrete outputs 1 ... 2 operating normally.

Specifications

Overview

This section contains specifications for the 170 AMM 090 00 I/O base.

General Specifications

Module type	4 differential inputs, 2 outputs (analog) 4 inputs, 2 outputs (discrete)
Supply voltage	24 VDC
Supply voltage range	20 ... 30 VDC
Supply current consumption	max. 350 mA at 24 VDC
Power dissipation	4 W typical 6 W maximum
I/O map	5 input words 5 output words

Isolation

Discrete inputs from outputs	none
Analog inputs from outputs	none
Analog inputs and outputs from operating voltage	500 VDC, 1 min
Operating voltage and all inputs and outputs from ground	500 VDC, 1 min

Fuses

Internal	none
Operating voltage L+	1 A slow-blow (Bussmann GDC-1A or equivalent)
Output voltage 1L+	Depending on the application, max. 5 A fast-blow
Input voltage 1L+	Depending on the application, max. 1 A fast-blow

EMC

Immunity	IEC 1131-2 (500 V disturbance pulse in operating voltage)
Radiated noise	EN 50081-2
Agency approvals	UL, CSA, CE, FM Class 1, Div 2

Physical Dimensions

Width	125 mm (4.9 in)
Depth (with no adapter)	40 mm (1.54 in)
Length	141.5 mm (5.5 in) no busbar 159.5 mm (6.3 in) with two-row busbar 171.5 mm (6.75) with three-row busbar
Weight	240 g (0.55 lb)

Analog Inputs

Number of channels	4 differential inputs
Common mode voltage	Input voltage from Ag +/- 11 V
Common mode suppression	> 54 dB
Overvoltage (1 input) Static Dynamic	Voltage ranges +/- 30 V when voltage source is 24 V +/- 50 V max. 100 s Current ranges, input current < 48 mA
Input resistance	> 1 MOhm voltage range 250 Ohm current range
Input filter time constant	120 microsec. (typ.)
Crosstalk	Input channel from input channel approx -80 dB

Range Specific Data

Range	**+/- 10 V**	**+/- 5 V**	**1 ... 5 V**	**+/- 20 mA**	**4 ... 20 mA**
Conversion time	10 ms for all channels	10 ms for all channels	10 ms for all channels	10 ms for all channels	10 ms for all channels
Conversion error at 25 deg. C	max. 0.08 % of upper measuring range value	max. 0.16 % of upper measuring range value	max. 0.16 % of upper measuring range value	max. 0.16 % of upper measuring range value	max. 0.16 % of upper measuring range value
Error at 0 ... 60 deg. C	max. 0.15 % of upper measuring range value	max. 0.3 % of upper measuring range value	max. 0.3 % of upper measuring range value	max. 0.3 % of upper measuring range value	max. 0.3 % of upper measuring range value
Conversion consistency	max. 0.02 % of upper measuring range value	max. 0.04 % of upper measuring range value	max. 0.04 % of upper measuring range value	max. 0.04 % of upper measuring range value	max. 0.04 % of upper measuring range value
Resolution)	14 bits	13 bits	12 bits	13 bits	12 bits

Analog Outputs

Number of channels	2	
Conversion time	1 ms for all channels	
Conversion error at 25 deg. C	max +/- 0.35 % of upper measuring range value	
Loop power supply	None required	
Error at 0 ... 60 deg. C	max +/- 0.7 % of upper measuring range value	
Linearity	+/- 1 LSB (monotonous)	
Crosstalk	Output channel from output channel approx. - 80 dB	
Range	**+/-10 V Voltage**	**0 ... 20 mA Current**
Output load	>= 3 KOhm	<= 600 Ohms
Resolution	12 bits	12 bits

Discrete Inputs

Number of points	4
Number of groups	1
Points per group	4
Signal type	True High
IEC 1131 type	1+ (See Appendix *IEC 1131 Input Types, page 673* for definitions of IEC input types.)
ON voltage	+11 ... +30 VDC
OFF voltage	-3 ... +5 VDC
Input current	2.5 mA minimum ON (6 mA at 24 VDC) 1.2 mA maximum OFF
Input voltage range	-3 ... +30 VDC
Input resistance	4 kOhm
Response time	2.2 ms OFF to ON 2.2 ms ON to OFF

Discrete Outputs

A 2-point temperature monitoring circuit protects each discrete output against short-circuiting and overload. The outputs will keep disconnecting and reconnecting until the cause of the error has been eliminated.

Output type	Semiconductor
Output voltage	External supply - .5 VDC
Number of points	2
Number of groups	1
Points per group	2
Current capacity	1 A/point maximum 2 A/group 2 A/module
Signal type	True High
Leakage current (output out)	< 1 mA @ 24 VDC
On state voltage drop	< 0.5 VDC @ 0.5 A
Output protection (See Note Below)	Outputs are electronically safeguarded to assist in short circuit and overload protection
Fault reporting	1 red LED/point (row 3) ON when short current/ overload occurs
Error indication	Message "I/O Error" on bus adapter if module is defective
Response time (resistive load / 0.5 A)	< 0.1 ms OFF to ON < 0.1 ms ON to OFF
Maximum switching cycles	1000/h for 0.5 A inductive load 100/s for 0.5 A resistive load 8/s for 1.2 W Tungsten load

NOTE: Discrete 24 VDC outputs incorporate thermal shutdown and overload protection. The output current of a shortened output is limited to a nondestructive value. The short circuit heats the output driver and the output will switch off. The output will switch on again if the driver leaves the overtemperature condition. If the short circuit still exists, the driver will reach the overtemperature condition again and will switch off again.

Internal Pin Connections

Overview

This section contains an illustration showing the internal connections between terminals on the I/O base and an optional busbar.

Illustration

Rows 1 through 3 show the internal connections between terminals on the I/O base. Row 4 through 6 show the internal connections on the optional busbar.

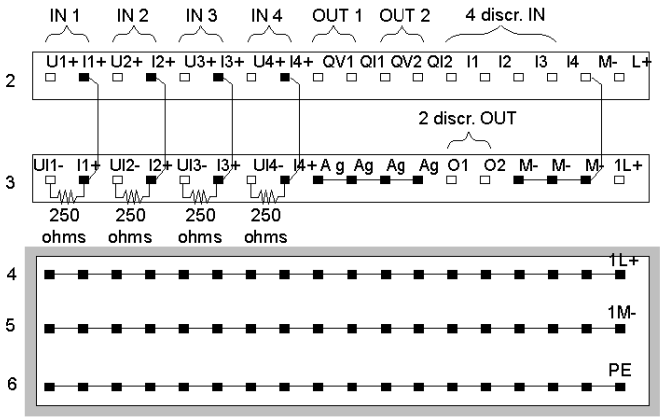

Field Wiring Guidelines

Overview

The discrete input points are field wired to row 2 of the base. The discrete output points are wired to row 3. This section contains wiring guidelines and precautions.

Terminal Connector

To connect field devices to the I/O base, you need a field wiring terminal connector. Schneider Electric sells terminal connectors in sets of three.

Type	Part Number
Screw-in	170 XTS 001 00
Spring-clip	170 XTS 002 00

Busbar May Be Required

Depending on the type of field devices you are using, you may need a 1-, 2-, or 3-row busbar. The following busbars are available from Schneider Electric.

Type	Number of Rows	Part Number
Screw-in	1 - row	170 XTS 006 01
	2 - row	170 XTS 005 01
	3 - row	170 XTS 004 01
Spring-clip	1 - row	170 XTS 007 01
	2 - row	170 XTS 008 01
	3 - row	170 XTS 003 01

Mapping Terminal Blocks

⚠ CAUTION

POTENTIAL FOR SHORT CIRCUITS AND/OR POWER-UP SPIKES

Provide external fuses on the operating voltage to protect the module. Appropriate fuse values are shown in the wiring illustration. An unprotected module may be subject to short circuits and/or power-up spikes.

Failure to follow these instructions can result in injury or equipment damage.

Mapping terminal blocks and busbars is described in the table below.

Row	Connection	Signal	Meaning
2	1, 3, 5, 7	U1+ ... U4+	pos. voltage input (analog)
	2, 4, 6, 8	IS1 ... IS4	current sensing inputs (analog)
	9, 11	QV1, QV2	analog output channels 1 ... 2 (voltage mode)
	10, 12	QI1, QI2	analog outputs, channels 1 ... 2 (current mode)
	13 ... 16	I1 ... I4	discrete inputs 1...4
	17/ 18	M-/ L+	reference potential and operating voltage
3	1, 3, 5, 7	UI1- ... UI4-	neg. voltage mode and current mode inputs (analog)
	2, 4, 6, 8	I1+ ... I4+	pos. analog inputs, channels 1 ... 4 (current mode)
	9 ... 12	Ag	reference potential for analog channels
	13, 14	O1, O2	discrete outputs 1,2
	15, 16, 17	M-	reference potential for discrete outputs
	18	1L+	output voltage mode for discrete outputs
4	1 ... 18	1L+	sensor supply
5	1 ... 18	1M-	reference potential for sensors
6	1 ... 18	PE	protective ground

Protective Circuit May Be Required

When contacted switches are used on the input lines or when lines to the peripherals are very long, the outputs of inductive loads require protective circuitry with a clamping/suppressor diode. Install the protective circuit prallel to the operating coil.

Wiring Diagrams

Overview

This section contains diagrams to assist you in wiring the following types of devices:

I/O Type	Diagram
Discrete input	2- and 4-wire sensors
Discrete output	3-wire actuators
Analog output	2-wire actuators
Analog input	3-wire sensors

Discrete Inputs

The diagram below shows an example of wiring for discrete inputs:

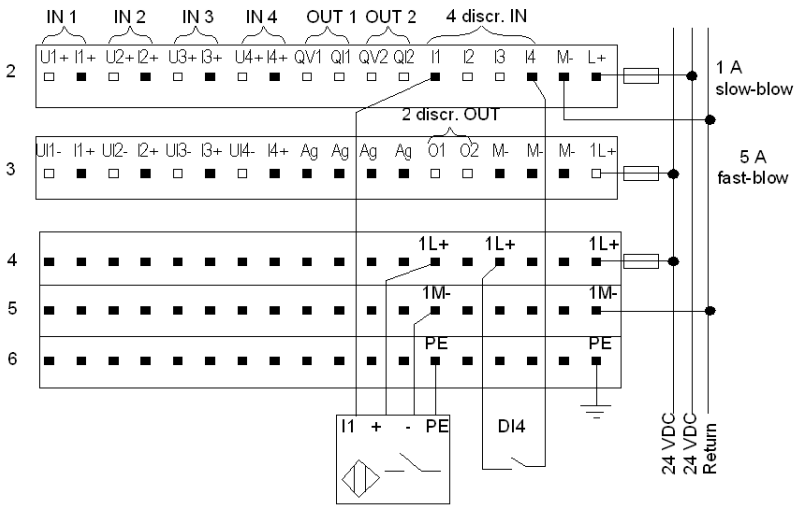

Discrete Outputs

The diagram below shows an example of wiring for discrete outputs:

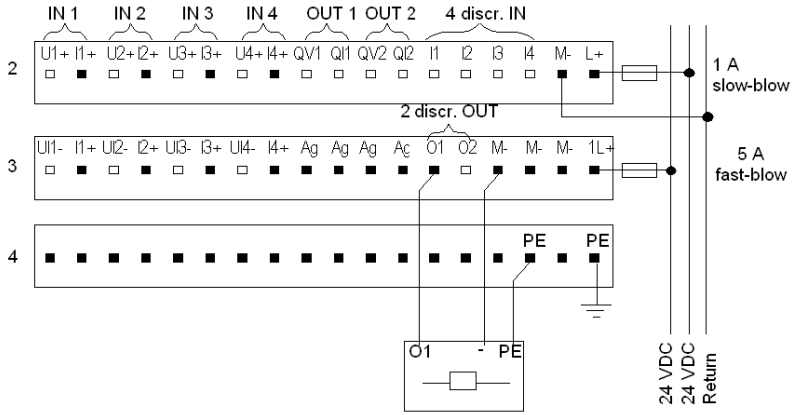

Analog Outputs

The diagram below shows an example of wiring for analog outputs:

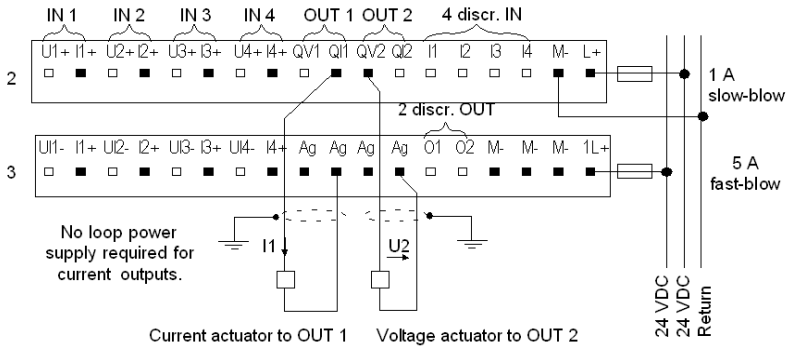

Analog Inputs

The diagram below shows an example of wiring for analog inputs:

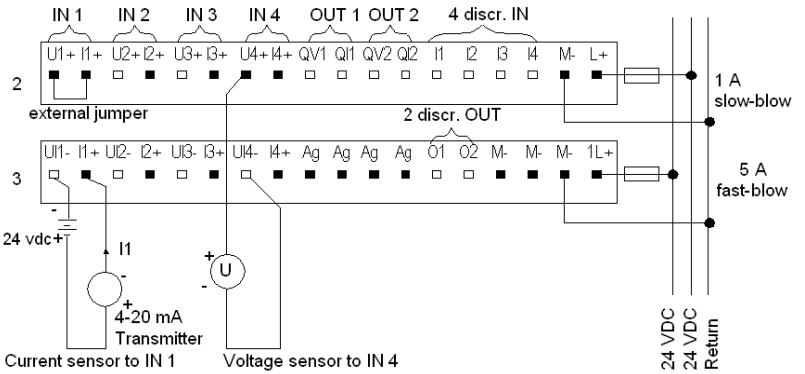

I/O Mapping

Overview

The 170 AMM 090 00 TSX Momentum I/O base supports 4 analog inputs, 2 analog outputs,4 discrete inputs and 2 discrete outputs. This section contains information about the mapping of the output words into the analog/discrete output values, the usage of output words for channel configuration and the mapping of analog/discrete input values into input words.

I/O Map

The I/O base may be mapped as five contiguous input words and five contiguous output words, as follows:

Word	Input Data	Output Data
1 = LSW	Value, input channel 1	Parameters for input channels 1 ... 4
2	Value, input channel 2	Parameters for output channels 1,2
3	Value, input channel 3	Value, output channel 1
4	Value, input channel 4	Value, output channel 2
5 = MSW	Discrete inputs	Discrete outputs

Discrete I/O Mapping

The figure below shows how data is mapped with an IEC Compliant adapter.

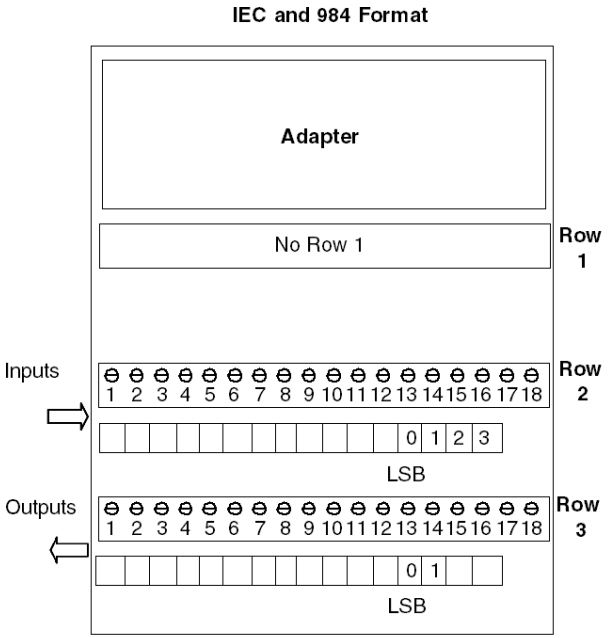

Analog Channel Parameters

Overview

Parameters must be set for all of the analog channels before the module can be commissioned. This section provides the codes for setting the parameters and gives examples of parameter settings.

NOTE: If you set new parameters for the module, always send a complete set of parameters (all channels, inputs and outputs), even if you only want to change a single parameter. Otherwise the module will refuse the new parameters and continue working with the old ones.

Key

This section focuses on output words 1 and 2, as highlighted in the table below:

Word	Input Data	Output Data
1 = LSW	Value, input channel 1	**Parameters for input channels 1 ... 4**
2	Value, input channel 2	**Parameters for input channels 5 ... 8**
3	Value, input channel 3	Not used
4	Value, input channel 4	Not used
5 = MSW	Value, input channel 5	Not used

Illustration

Parameters are set by entering a four-bit code in output words 1 and 2, as follows:

Output Word 1															
15	14	13	12	11	10	9	8	7	6	5	4	3	2	1	0
for input channel 4				for input channel 3				for input channel 2				for input channel 1			

Output Word 2															
15	14	13	12	11	10	9	8	7	6	5	4	3	2	1	0
not used				not used				for output channel 2				for output channel 1			

Codes for Analog Input Parameters

Use the following codes to set the parameters for each analog input channel:

Code (binary)	Code (hex)	Parameter
0100	4	Channel inactive
0010	2	+/-5V or +/-20mA input range
0011	3	+/-10V input range
1010	A	1 ... 5V or 4 ... 20 mA input range

Example of Analog Input Parameters

If output word 1 is initialized as A324 hex, then the input channels have the following parameters:

Channel	Parameter
1	Disabled
2	at +/- 5 V
3	at +/- 10 V
4	at 1 ... 5 V

Codes for Analog Output Parameters

Use the following codes to set the codes for each analog output channel. The remaining bit combinations are reserved.

Code (Binary)	Code (Hex)	Parameter	Reset Behavior of Outputs
0 1 0 0	4	Channel inactive	0 V / 0 mA
0 0 0 1	1	0 ... 20 mA	0 mA
0 0 1 1	3	+ / - 10 VDC	0 V
0 1 0 1	5	0 ... 20 mA	20 mA
0 1 1 1	7	+ / - 10 VDC	+ 10 VDC
1 0 0 1	9	0 ... 20 mA	Output is held
1 0 1 1	B	+ / - 10 VDC	Output is held

Example of Analog Output Parameters

If output word 2 is initialized as 0091 hex, then the output channels have the following parameters:

Channel	Parameter
1	0 ... 20 mA with reset to 0
2	0 ... 20 mA with reset to hold

Analog Outputs

Overview

This section describes how to interpret the value of the analog output channels.

Key

This section describes output words 3 and 4, as highlighted in the table below:

Word	Input Data	Output Data
1 = LSW	Value, input channel 1	Parameters for input channels 1 ... 4
2	Value, input channel 2	Parameters for output channels 1, 2
3	Value, input channel 3	**Value, output channel 1**
4	Value, input channel 4	**Value, output channel 2**
5 = MSW	Discrete inputs	Discrete outputs

Diagram

The following diagrams explain how to interpret the value of output words 3 and 4. .

Output Word 3															
15	14	13	12	11	10	9	8	7	6	5	4	3	2	1	0
sign	value output channel 1														

Output Word 4															
15	14	13	12	11	10	9	8	7	6	5	4	3	2	1	0
sign	value output channel 2														

Analog Inputs

Overview

This section describes how to interpret the value of the analog input channels.

Key

This section describes input words 1 ... 4, as highlighted in the table below:

Word	Input Data	Output Data
1 = LSW	**Value, input channel 1**	Parameters for input channels 1 ... 4
2	**Value, input channel 2**	Parameters for output channels 1, 2
3	**Value, input channel 3**	Value, output channel 1
4	**Value, input channel 4**	Value, output channel 2
5 = MSW	Discrete inputs	Discrete outputs

Analog Input Values

Mapping of analog input values is shown below.

Intput Word 1															
15	14	13	12	11	10	9	8	7	6	5	4	3	2	1	0
sign	value input channel 1														

Input Word 4															
15	14	13	12	11	10	9	8	7	6	5	4	3	2	1	0
sign	value input channel 4														

Resolution

The resolution of the module is 12-, 13- or 14-bit, depending on the range.

Discrete Inputs and Outputs

Overview

The 170 AMM 090 00 TSX Momentum I/O base supports 4 discrete inputs and 2 discrete outputs. This section describes how to map I/O data between the I/O base and the CPU.

NOTE: You cannot commision the discrete I/O until parameters have been set for all six analog channels.

You must configure analog inputs and outputs, even if they are not being used, for the discrete inputs and outputs to operate.

Key

The discrete inputs and outputs are I/O mapped as word 5, the most significant word, as shown in the table below:

Word	Input Data	Output Data
1 = LSW	Value, input channel 1	Parameters for input channels 1 ... 4
2	Value, input channel 2	Parameters for output channels 1,2
3	Value, input channel 3	Value, output channel 1
4	Value, input channel 4	Value, output channel 2
5 = MSW	**Discrete inputs**	**Discrete outputs**

Number of Words

The processor sends two discrete output data bits in one 16-bit word to the I/O base.

The base returns four discrete input data bits, and possibly an error message, if one has been detected, to the processor in one 16-bit word.

Input Measuring Ranges

Overview

This section contains illustrations explaining the analog/digital relation for the various input and output measuring ranges.

Input Range +/- 10 V

The following diagram shows the analog/digital relation for the input measuring range +/- 10 V. The voltage value is calculated along the following formula using the digital measurand: Vn = 3200 x Va (for the linear range):

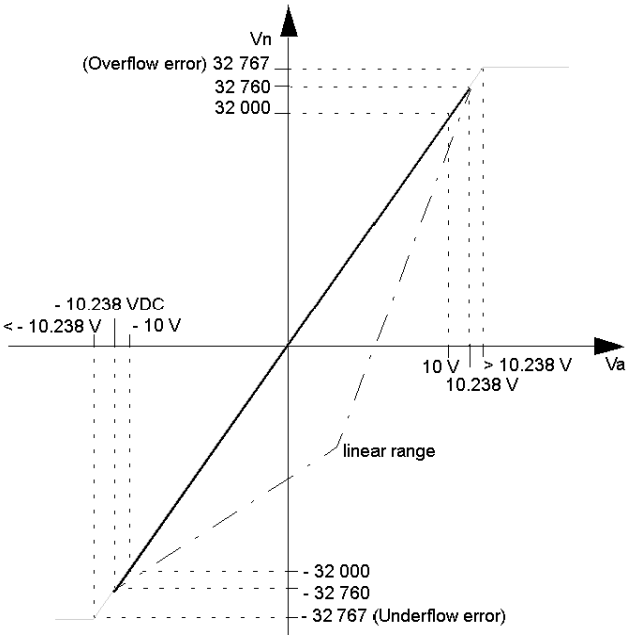

Input Range +/- 5 V

The following diagram shows the analog/digital relation for the input measuring range +/- 5 V. The voltage value is calculated along the following formula using the digital measurand: Vn = 6400 x Va (for the linear range):

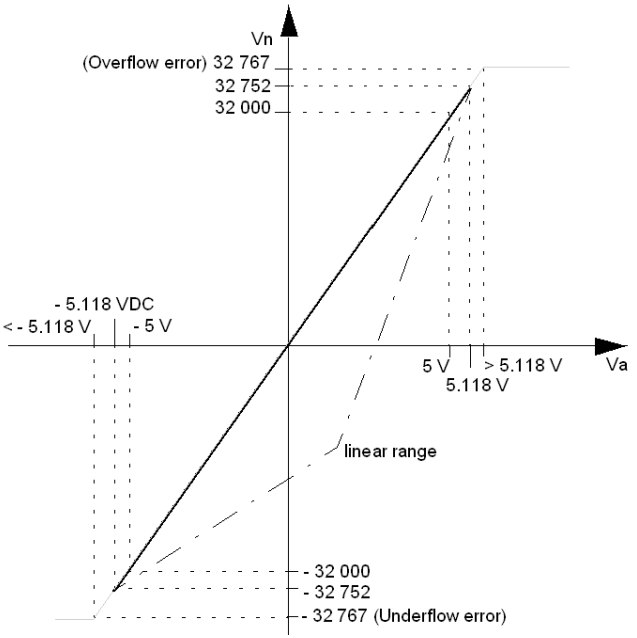

Input Range +/- 20 mA

The following diagram shows the analog/digital relation for the input measuring range +/- 20 mA. The current value is calculated along the following formula using the digital measurand: Vn = 1600 x Ia (for the linear range):

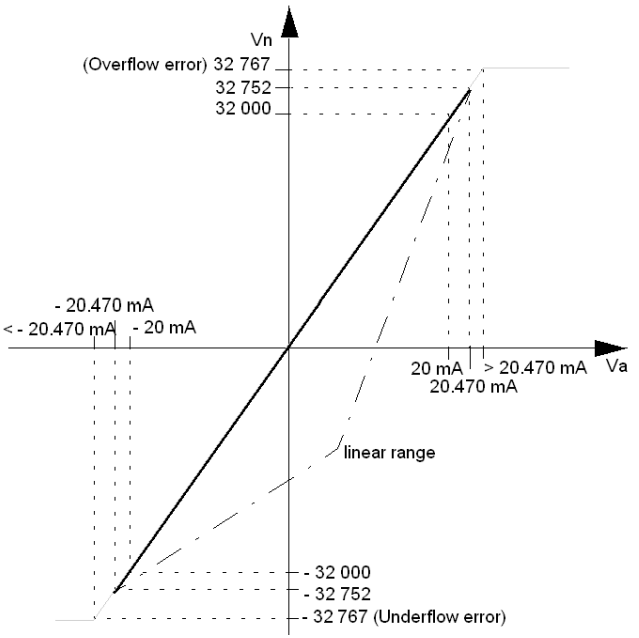

Input Range 1 ... 5 V

The following diagram shows the analog/digital relation for the input measuring range 1 ... 5 V. The voltage value is calculated along the following formula using the digital measurand: Vn = 8000 x Va - 8000 (for the linear range):

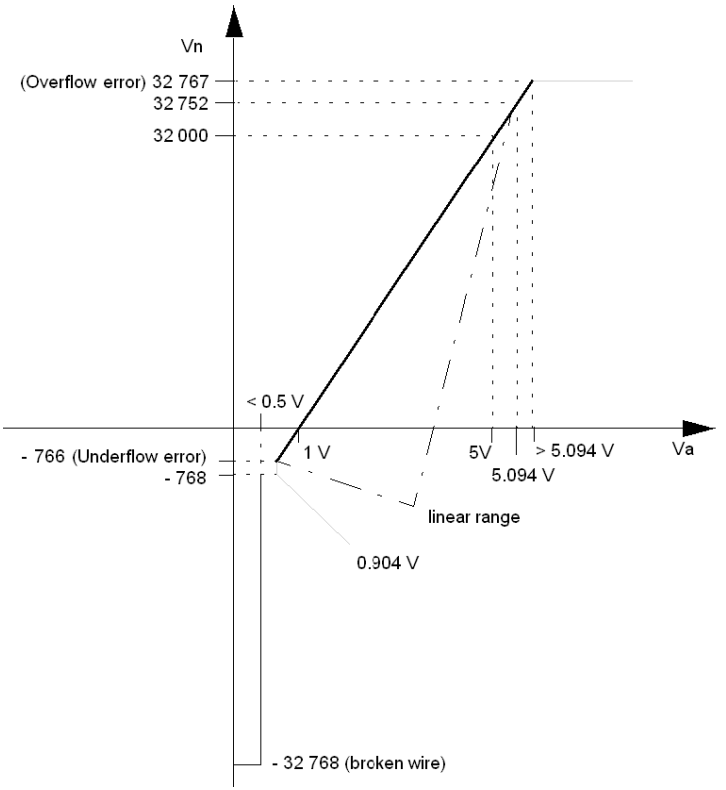

Input Range 4 ... 20 mA

The following diagram shows the analog/digital relation for the input measuring range 4 ... 20 mA. The current value is calculated along the following formula using the digital measurand: Vn = 2000 x Ia - 8000 (for the linear range). Disabled channels deliver a value of 0.

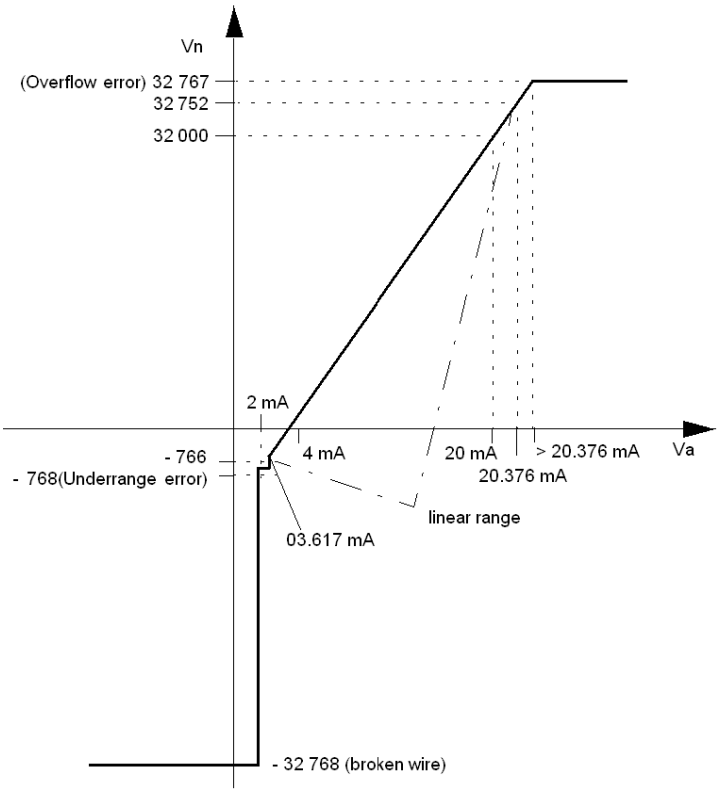

Output Range +/- 10 V

The following diagram shows the analog/digital relation for the output range +/- 10 V. When the bus is reset, the outputs use the configured parameters. If the module does not have valid parameters, the outputs will go to 0 V resp. 0 mA.The output voltage value is calculated along the following formula using the digital default value:Va = 1/3200 x Vn.

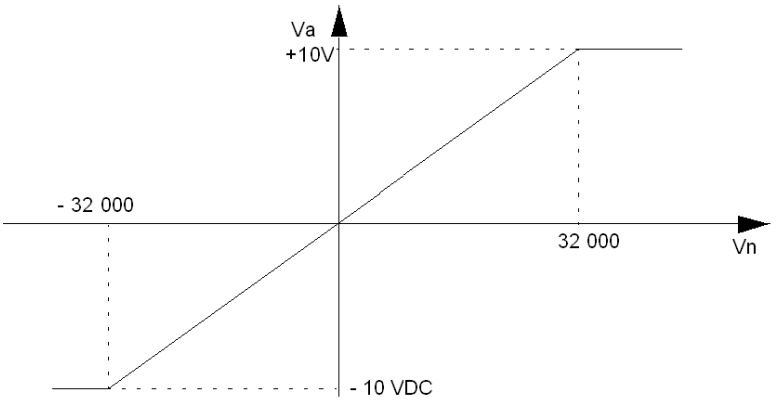

Output Range 0 ... 20 mA

The following diagram shows the analog/digital relation for the output range 0 ... 20 mA. When the bus is reset, the outputs use the configured parameters. If the module does not have valid parameters, the outputs will go to 0 V resp. 0 mA.The output current value is calculated along the following formula using the digital default value:Ia = 1/1600 x Vn.

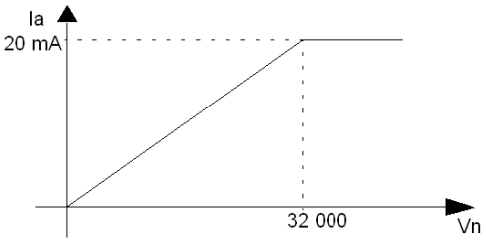

Error Messages

Overview

Error messages are stored in input word 5 (the 3x +4 register). This section explains how to interpret the bits in that register.

Diagram

This diagram explains the error message displayed by each bit. A value of 1 indicates the error has occurred.

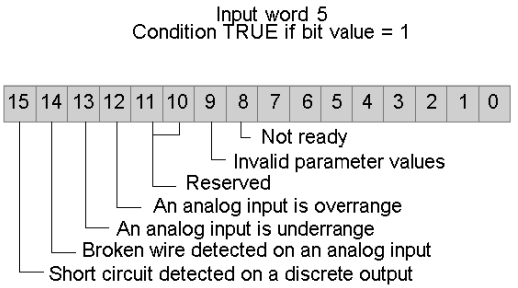

Not Ready (Bit 8)

This error occurs when the I/O base has not yet received valid parameters or has just received parameters for the first time and is checking them.

Invalid Parameters (Bit 9)

This error occurs when the I/O base refuses one or more invalid parameters. The base will continue working with the old parameters until it receives a complete set of valid parameters.

Overrange Indication (Bit 12)

This error occurs when the I/O base detects an overrange analog input value. The threshold is range-dependent.

Underrange Indication (Bit 13)

This error occurs when the I/O base detects an underrange analog input value. The threshold is range-dependent.

Broken Wire Detection (Bit 14))

Broken wire detection is possible for the 4 ... 20 mA range. In this case, a current signal that is less than 2 mA on one of the inputs is detected as a broken wire. The input word of that channel returns the value -32,768.

In the 1 ... 5 VDC range, broken wire detection is correctly seen as undervoltage detection. A voltage of less than 0.5 VDC on on of the input channels is recognized as broken wire. The input word of that channel returns the value -32,768.

In case of a broken wire, the input floats and bit 14 is not set in all cases. A reliable broken wire detection is only possible if a resistor is wired in parallel to the input terminals. This resistor will discharge the input capacity and broken wire detection will be available.

The value of this resistor depends on internal resistance of the sensor. Values too low might influene the input signal and values too high lengthen the time for broken wire detection. Normally, values of less than 100 kOhm are appropriate.

Short Circuit (Bit 15)

This error occurs when the I/O base detects a short circuit on a discrete output.

170 AMM 090 01 Analog 4 Ch. In / 2 Ch. Out Module Base w/ 12 VDC I/O Pts

34

Overview

This chapter describes the 170 AMM 090 01 Momentum I/O base.

What's in this Chapter?

This chapter contains the following topics:

Topic	Page
Front Panel Components	558
Specifications	560
Internal Pin Connections	564
Field Wiring Guidelines	565
Wiring Diagrams	567
I/O Mapping	570
Analog Channel Parameters	572
Analog Outputs	575
Analog Inputs	576
Discrete Inputs and Outputs	577
Input and Output Measuring Ranges	578
Error Messages	584

Front Panel Components

Overview

This section contains an illustration of the front panel of the 170 AMM 090 01 I/O base and a description of the LEDs.

Front Panel Illustration

The front panel of the I/O base is shown in the illustration below.

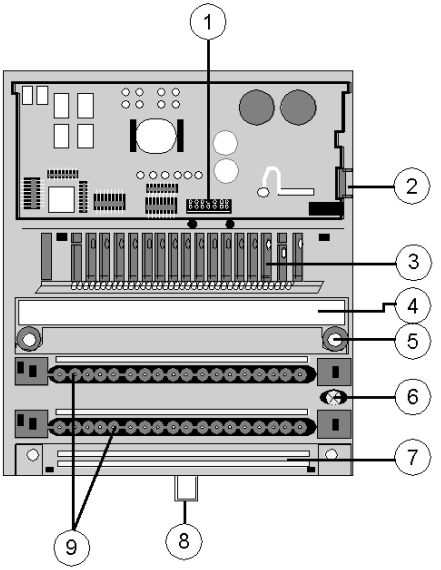

Components of the I/O Module

Label	Description
1	Internal interface (ATI) connector
2	Ground contact for the adapter
3	LED status display
4	Protective cover
5	Mounting holes for panel mount
6	Grounding screw
7	Busbar Mounting Slot
8	Locking tab for DIN rail mount
9	Sockets for the terminal connectors

LED Illustration

The LEDs are shown in the illustration below.

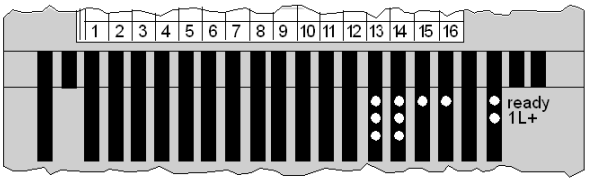

LED Descriptions

The LEDs are described in the table below.

Indicator	Condition	Message
Ready	Green	Module is ready to communicate on network. Operating voltage for internal logic is present and self-test has been passed.
	Off	Module is not ready.
1L+	Green	Supply voltage for outputs 1, 2 applied.
	Off	Supply voltage for outputs 1, 2 not applied.
Top row 13 ... 16	Green	Discrete input status (an LED per input). Input point active, i.e. input carries "1" signal (logically "ON").
	Off	Discrete input status (an LED per input). Input point inactive, i.e. input carries "0" signal (logically "OFF").
Middle row 13 , 14	Green	Discrete output status (an LED per output). Output point active, i.e. output carries "1" signal (logically "ON").
	Off	Discrete output status (an LED per output). Output point inactive, i.e. output carries "0" signal (logically "OFF").
Bottom row 13 , 14	Red	Discrete output overload (one LED per output). Output concerned short-circuited or overloaded.
	Off	Discrete outputs 1 ... 2 operating normally.

Specifications

Overview

This section contains specifications for the 170 AMM 090 01 I/O base.

General Specifications

Module type	4 differential inputs, 2 outputs (analog) 4 inputs, 2 outputs (discrete)
Supply voltage	12 VDC
Supply voltage range	9.6 ... 14.4 VDC
Supply current consumption	max. 750 mA at 12 VDC
Power dissipation	4 W typical 6 W maximum
I/O map	5 input words 5 output words

Isolation

Discrete inputs from outputs	none
Analog inputs from outputs	none
Analog inputs and outputs from operating voltage	500 VDC, 1 min
Operating voltage and all inputs and outputs from ground	500 VDC, 1 min

Fuses

Internal	none
Operating voltage L+	1 A slow-blow (Bussmann GDC-1A or equivalent)
Output voltage 1L+	Depending on the application, max. 5 A fast-blow
Input voltage 1L+	Depending on the application, max. 1 A fast-blow

EMC

Immunity	IEC 1131-2 (500 V disturbance pulse in operating voltage)
Radiated noise	EN 50081-2
Agency approvals	UL, CSA, CE

Physical Dimensions

Width	125 mm (4.9 in)
Depth (with no adapter)	40 mm (1.54 in)
Length	141.5 mm (5.5 in) no busbar 159.5 mm (6.3 in) with two-row busbar 171.5 mm (6.75) with three-row busbar
Weight	240 g (0.55 lb)

Analog Inputs

Number of channels	4 differential inputs
Common mode voltage	Input voltage from Ag +/- 11 V
Common mode suppression	> 54 dB
Overvoltage (1 input) Static Dynamic	Voltage ranges +/- 30 V when voltage source is 24 V +/- 50 V max. 100 s Current ranges, input current < 48 mA
Input resistance	> 1 MOhm voltage range 250 Ohm current range
Input filter time constant	120 microsec. (typ.)
Crosstalk	Input channel from input channel approx -80 dB

Range Specific Data

Range	**+/- 10 V**	**+/- 5 V**	**1 ... 5 V**	**+/- 20 mA**	**4 ... 20 mA**
Conversion time	10 ms for all channels	10 ms for all channels	10 ms for all channels	10 ms for all channels	10 ms for all channels
Conversion error at 25 deg. C	max. 0.08 % of upper measuring range value	max. 0.16 % of upper measuring range value	max. 0.16 % of upper measuring range value	max. 0.16 % of upper measuring range value	max. 0.16 % of upper measuring range value
Error at 0 ... 60 deg. C	max. 0.15 % of upper measuring range value	max. 0.3 % of upper measuring range value	max. 0.3 % of upper measuring range value	max. 0.3 % of upper measuring range value	max. 0.3 % of upper measuring range value
Conversion consistency	max. 0.02 % of upper measuring range value	max. 0.04 % of upper measuring range value	max. 0.04 % of upper measuring range value	max. 0.04 % of upper measuring range value	max. 0.04 % of upper measuring range value
Resolution)	14 bits	13 bits	12 bits	13 bits	12 bits

Analog Outputs

Number of channels	2	
Conversion time	1 ms for all channels	
Conversion error at 25 deg. C	max +/- 0.35 % of upper measuring range value	
Loop power supply	None required	
Error at 0 ... 60 deg. C	max +/- 0.7 % of upper measuring range value	
Linearity	+/- 1 LSB (monotonous)	
Crosstalk	Output channel from output channel approx. - 80 dB	
Range	**+/-10 V Voltage**	**0 ... 20 mA Current**
Output load	>= 3 KOhm	<= 600 Ohms
Resolution	12 bits	12 bits

Discrete Inputs

Number of points	4
Number of groups	1
Points per group	4
Signal type	True High
ON voltage	+7.5 ... +15 VDC
OFF voltage	-1.5 ... +2.5 VDC
Input current	2.5 mA minimum ON (5.5 mA at 12 VDC) 1.5 mA maximum OFF
Input voltage range	-1.5 ... +15 VDC
Input resistance	2.1 kOhm
Response time	2.2 ms OFF to ON 3.3 ms ON to OFF

Discrete Outputs

A 2-point temperature monitoring circuit protects each discrete output against short-circuiting and overload. The outputs will keep disconnecting and reconnecting until the cause of the error has been eliminated.

Output type	Semiconductor
Output voltage	External supply - .5 VDC
Number of points	2
Number of groups	1
Points per group	2
Current capacity	1 A/point maximum 2 A/group 2 A/module
Signal type	True High
Leakage current (output out)	< 1 mA @ 12 VDC
On state voltage drop	< 0.5 VDC @ 0.5 A
Output protection (See Note Below)	Outputs are electronically safeguarded to assist in short circuit and overload protection
Fault reporting	1 red LED/point (row 3) ON when short current/ overload occurs
Error indication	Message "I/O Error" on bus adapter if module is defective
Response time (resistive load / 0.5 A)	< 0.1 ms OFF to ON < 0.1 ms ON to OFF
Maximum switching cycles	1000/h for 0.5 A inductive load 100/s for 0.5 A resistive load 8/s for 1.2 W Tungsten load

NOTE: Discrete 12 VDC outputs incorporate thermal shutdown and overload protection. The output current of a shortened output is limited to a nondestructive value. The short circuit heats the output driver and the output will switch off. The output will switch on again if the driver leaves the overtemperature condition. If the short circuit still exists, the driver will reach the overtemperature condition again and will switch off again.

Internal Pin Connections

Overview

This section contains an illustration showing the internal connections between terminals on the I/O base and an optional busbar.

Illustration

Rows 1 through 3 show the internal connections between terminals on the I/O base. Row 4 through 6 show the internal connections on the optional busbar.

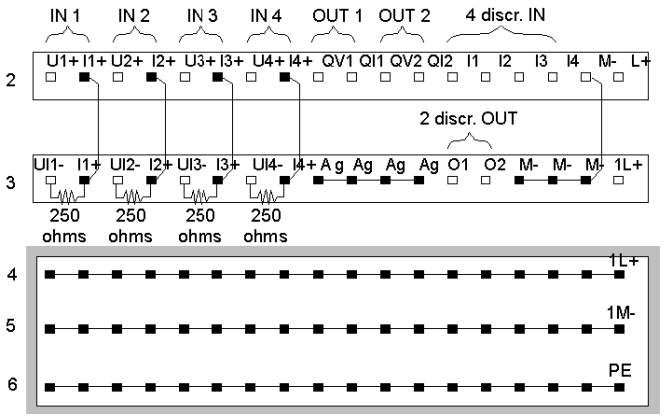

Field Wiring Guidelines

Overview

The discrete input points are field wired to row 2 of the base. The discrete output points are wired to row 3. This section contains wiring guidelines and precautions.

Terminal Connector

To connect field devices to the I/O base, you need a field wiring terminal connector. Schneider Electric sells terminal connectors in sets of three.

Type	Part Number
Screw-in	170 XTS 001 00
Spring-clip	170 XTS 002 00

Busbar May Be Required

Depending on the type of field devices you are using, you may need a 1-, 2-, or 3-row busbar. The following busbars are available from Schneider Electric.

Type	Number of Rows	Part Number
Screw-in	1 - row	170 XTS 006 01
	2 - row	170 XTS 005 01
	3 - row	170 XTS 004 01
Spring-clip	1 - row	170 XTS 007 01
	2 - row	170 XTS 008 01
	3 - row	170 XTS 003 01

Mapping Terminal Blocks

⚠ CAUTION

POTENTIAL FOR SHORT CIRCUITS AND/OR POWER-UP SPIKES

Provide external fuses on the operating voltage to protect the module. Appropriate fuse values are shown in the wiring illustration. An unprotected module may be subject to short circuits and/or power-up spikes.

Failure to follow these instructions can result in injury or equipment damage.

Mapping terminal blocks and busbars is described in the table below.

Row	Connection	Signal	Meaning
2	1, 3, 5, 7	U1+ ... U4+	pos. voltage input (analog)
	2, 4, 6, 8	IS1 ... IS4	current sensing inputs (analog)
	9, 11	QV1, QV2	analog output channels 1 ... 2 (voltage mode)
	10, 12	QI1, QI2	analog outputs, channels 1 ... 2 (current mode)
	13 ... 16	I1 ... I4	discrete inputs 1...4
	17/ 18	M-/ L+	reference potential and operating voltage
3	1, 3, 5, 7	UI1- ... UI4-	neg. voltage mode and current mode inputs (analog)
	2, 4, 6, 8	I1+ ... I4+	pos. analog inputs, channels 1 ... 4 (current mode)
	9 ... 12	Ag	reference potential for analog channels
	13, 14	O1, O2	discrete outputs 1,2
	15, 16, 17	M-	reference potential for discrete outputs
	18	1L+	output voltage mode for discrete outputs
4	1 ... 18	1L+	sensor supply
5	1 ... 18	1M-	reference potential for sensors
6	1 ... 18	PE	protective ground

Protective Circuit May Be Required

When contacted switches are used on the input lines or when lines to the peripherals are very long, the outputs of inductive loads require protective circuitry with a clamping/suppressor diode. Install the protective circuit prallel to the operating coil.

Wiring Diagrams

Overview

This section contains diagrams to assist you in wiring the following types of devices:

I/O Type	Diagram
Discrete input	2- and 4-wire sensors
Discrete output	3-wire actuators
Analog output	2-wire actuators
Analog input	3-wire sensors

Discrete Inputs

The diagram below shows an example of wiring for discrete inputs:

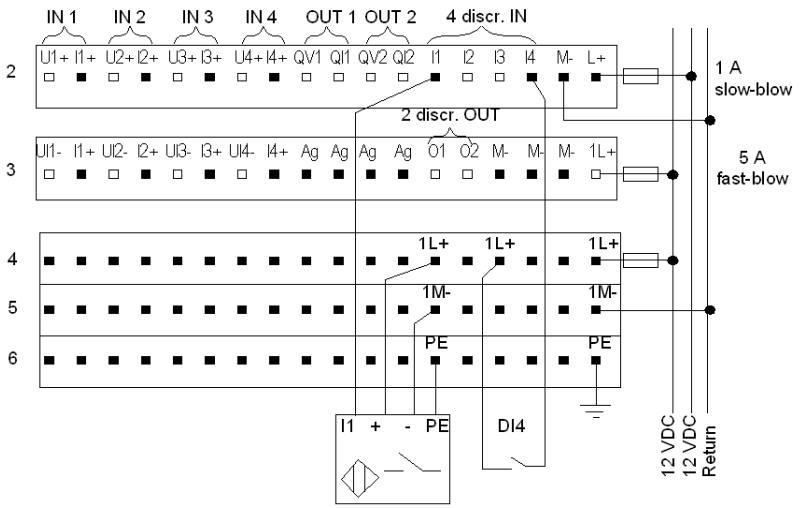

Discrete Outputs

The diagram below shows an example of wiring for discrete outputs:

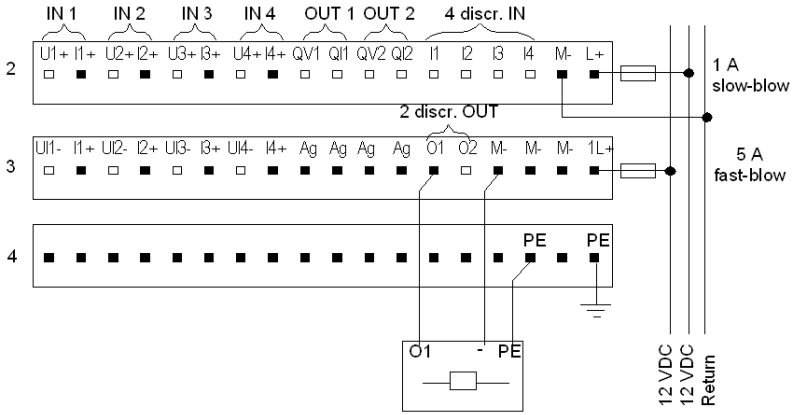

Analog Outputs

The diagram below shows an example of wiring for analog outputs:

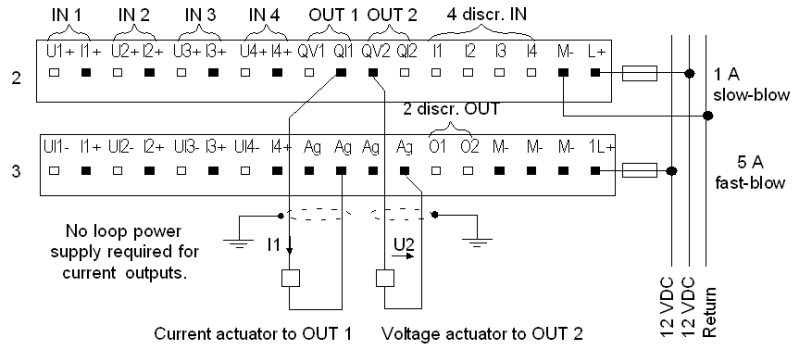

Analog Inputs

The diagram below shows an example of wiring for analog inputs:

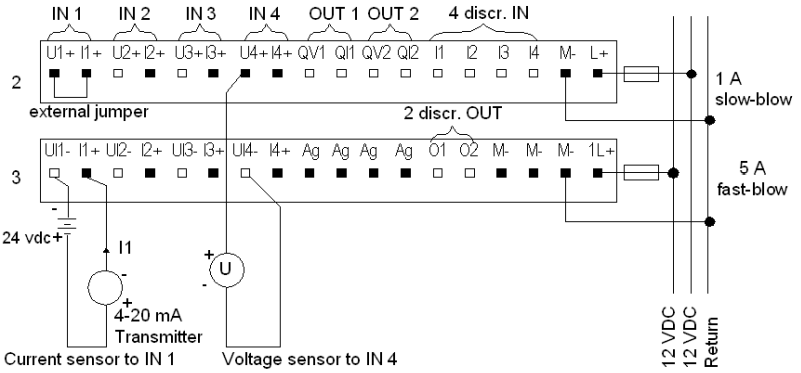

I/O Mapping

Overview

The 170 AMM 090 01 TSX Momentum I/O base supports 4 analog inputs, 2 analog outputs,4 discrete inputs and 2 discrete outputs. This section contains information about the mapping of the output words into the analog/discrete output values, the usage of output words for channel configuration and the mapping of analog/discrete input values into input words.

I/O Map

The I/O base may be mapped as five contiguous input words and five contiguous output words, as follows:

Word	Input Data	Output Data
1 = LSW	Value, input channel 1	Parameters for input channels 1 ... 4
2	Value, input channel 2	Parameters for output channels 1,2
3	Value, input channel 3	Value, output channel 1
4	Value, input channel 4	Value, output channel 2
5 = MSW	Discrete inputs	Discrete outputs

Discrete I/O Mapping

The figure below shows how data is mapped with an IEC Compliant adapter.

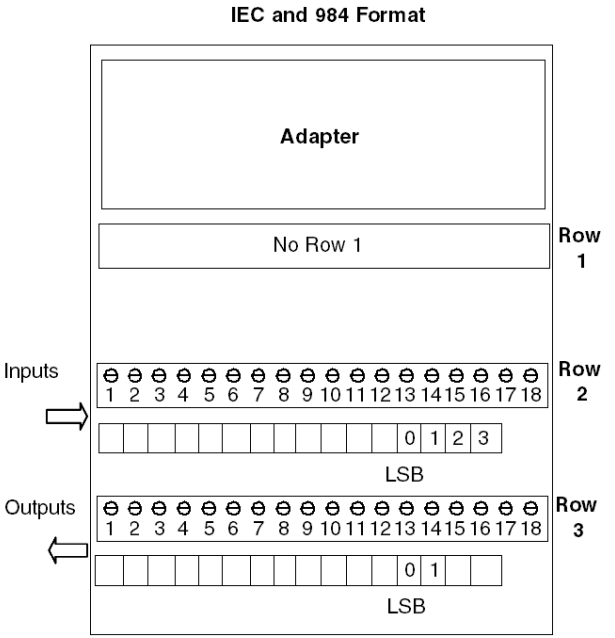

Analog Channel Parameters

Overview

Parameters must be set for all of the analog channels before the module can be commissioned. This section provides the codes for setting the parameters and gives examples of parameter settings.

NOTE: If you set new parameters for the module, always send a complete set of parameters (all channels, inputs and outputs), even if you only want to change a single parameter. Otherwise the module will refuse the new parameters and continue working with the old ones.

Key

This section focuses on output words 1 and 2, as highlighted in the table below:

Word	Input Data	Output Data
1 = LSW	Value, input channel 1	**Parameters for input channels 1 ... 4**
2	Value, input channel 2	**Parameters for input channels 5 ... 8**
3	Value, input channel 3	Not used
4	Value, input channel 4	Not used
5 = MSW	Value, input channel 5	Not used

Illustration

Parameters are set by entering a four-bit code in output words 1 and 2, as follows:

Output Word 1															
15	14	13	12	11	10	9	8	7	6	5	4	3	2	1	0
for input channel 4				for input channel 3				for input channel 2				for input channel 1			

Output Word 2															
15	14	13	12	11	10	9	8	7	6	5	4	3	2	1	0
not used				not used				for output channel 2				for output channel 1			

Codes for Analog Input Parameters

Use the following codes to set the parameters for each analog input channel:

Code (binary)	Code (hex)	Parameter
0100	4	Channel inactive
0010	2	+/-5V or +/-20mA input range
0011	3	+/-10V input range
1010	A	1 ... 5V or 4 ... 20 mA input range

Example of Analog Input Parameters

If output word 1 is initialized as A324 hex, then the input channels have the following parameters:

Channel	Parameter
1	Disabled
2	at +/- 5 V
3	at +/- 10 V
4	at 1 ... 5 V

Codes for Analog Output Parameters

Use the following codes to set the codes for each analog output channel. The remaining bit combinations are reserved.

Code (Binary)	Code (Hex)	Parameter	Reset Behavior of Outputs
0 1 0 0	4	Channel inactive	0 V / 0 mA
0 0 0 1	1	0 ... 20 mA	0 mA
0 0 1 1	3	+ / - 10 VDC	0 V
0 1 0 1	5	0 ... 20 mA	20 mA
0 1 1 1	7	+ / - 10 VDC	+ 10 VDC
1 0 0 1	9	0 ... 20 mA	Output is held
1 0 1 1	B	+ / - 10 VDC	Output is held

Example of Analog Output Parameters

If output word 2 is initialized as 0091 hex, then the output channels have the following parameters:

Channel	Parameter
1	0 ... 20 mA with reset to 0
2	0 ... 20 mA with reset to hold

Analog Outputs

Overview

This section describes how to interpret the value of the analog output channels.

Key

This section describes output words 3 and 4, as highlighted in the table below:

Word	Input Data	Output Data
1 = LSW	Value, input channel 1	Parameters for input channels 1 ... 4
2	Value, input channel 2	Parameters for output channels 1, 2
3	Value, input channel 3	**Value, output channel 1**
4	Value, input channel 4	**Value, output channel 2**
5 = MSW	Discrete inputs	Discrete outputs

Diagram

The following diagrams explain how to interpret the value of output words 3 and 4.

Output Word 3															
15	14	13	12	11	10	9	8	7	6	5	4	3	2	1	0
sign	value output channel 1														

Output Word 4															
15	14	13	12	11	10	9	8	7	6	5	4	3	2	1	0
sign	value output channel 2														

Analog Inputs

Overview

This section describes how to interpret the value of the analog input channels.

Key

This section describes input words 1 ... 4, as highlighted in the table below:

Word	Input Data	Output Data
1 = LSW	**Value, input channel 1**	Parameters for input channels 1 ... 4
2	**Value, input channel 2**	Parameters for output channels 1, 2
3	**Value, input channel 3**	Value, output channel 1
4	**Value, input channel 4**	Value, output channel 2
5 = MSW	Discrete inputs	Discrete outputs

Analog Input Values

Mapping of analog input values is shown below.

Input Word 1															
15	14	13	12	11	10	9	8	7	6	5	4	3	2	1	0
sign	value input channel 1														

Input Word 4															
15	14	13	12	11	10	9	8	7	6	5	4	3	2	1	0
sign	value input channel 4														

Resolution

The resolution of the module is 12-, 13- or 14-bit, depending on the range.

Discrete Inputs and Outputs

Overview

The 170 AMM 090 01 TSX Momentum I/O base supports 4 discrete inputs and 2 discrete outputs. This section describes how to map I/O data between the I/O base and the CPU.

NOTE: You cannot commission the discrete I/O until parameters have been set for all six analog channels.

You must configure analog inputs and outputs, even if they are not being used, for the discrete inputs and outputs to operate.

Key

The discrete inputs and outputs are I/O mapped as word 5, the most significant word, as shown in the table below:

Word	Input Data	Output Data
1 = LSW	Value, input channel 1	Parameters for input channels 1 ... 4
2	Value, input channel 2	Parameters for output channels 1,2
3	Value, input channel 3	Value, output channel 1
4	Value, input channel 4	Value, output channel 2
5 = MSW	**Discrete inputs**	**Discrete outputs**

Number of Words

The processor sends two discrete output data bits in one 16-bit word to the I/O base.

The base returns four discrete input data bits, and possibly an error message, if one has been detected, to the processor in one 16-bit word.

Input and Output Measuring Ranges

Overview

This section contains illustrations explaining the analog/digital relation for the various input and output measuring ranges.

Input Range +/- 10 V

The following diagram shows the analog/digital relation for the input measuring range +/- 10 V. The voltage value is calculated along the following formula using the digital measurand: Vn = 3200 x Va (for the linear range):

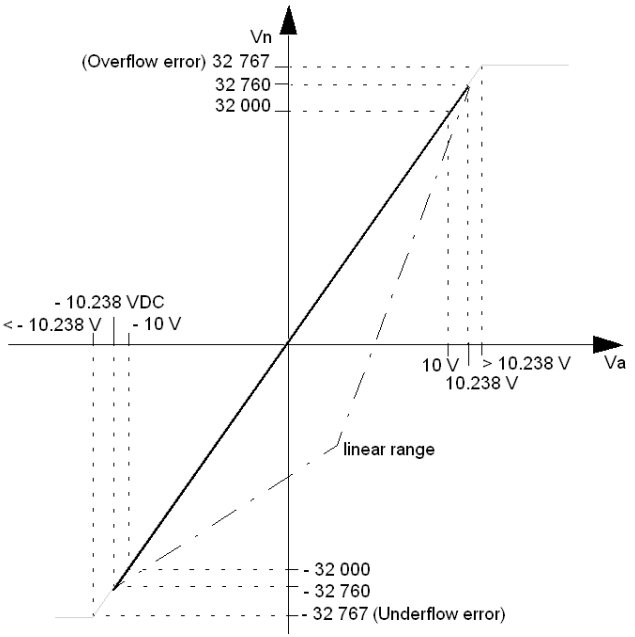

Input Range +/- 5 V

The following diagram shows the analog/digital relation for the input measuring range +/- 5 V. The voltage value is calculated along the following formula using the digital measurand: Vn = 6400 x Va (for the linear range):

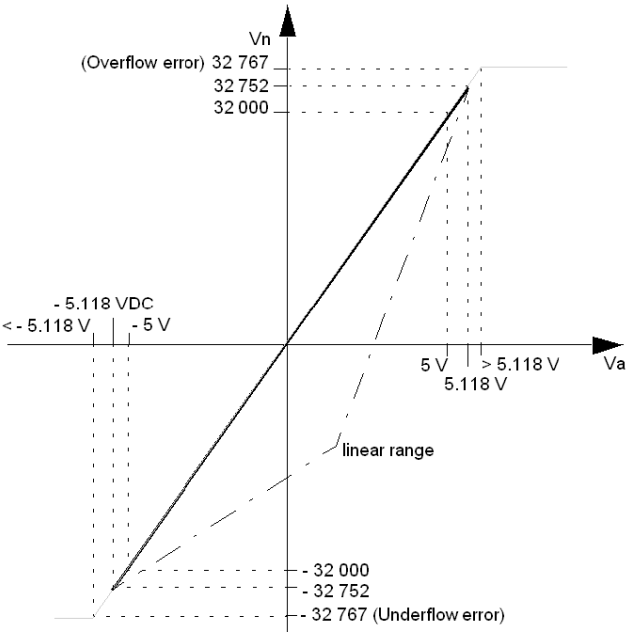

Input Range +/- 20 mA

The following diagram shows the analog/digital relation for the input measuring range +/- 20 mA. The current value is calculated along the following formula using the digital measurand: Vn = 1600 x Ia (for the linear range):

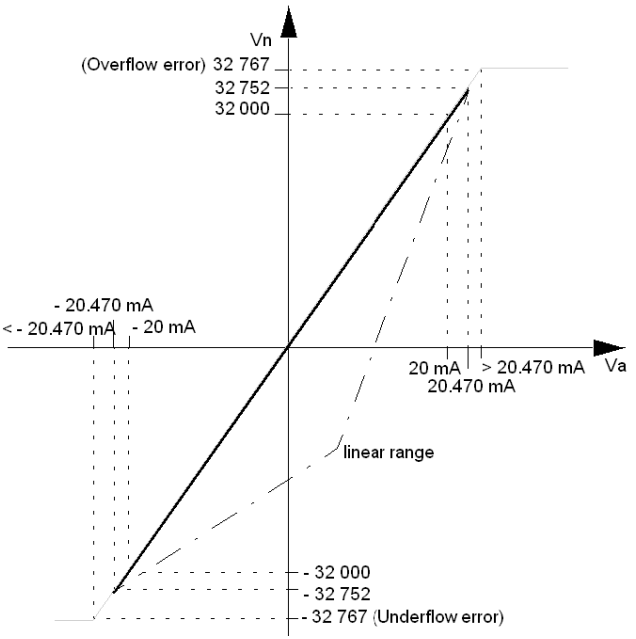

Input Range 1 ... 5 V

The following diagram shows the analog/digital relation for the input measuring range 1 ... 5 V. The voltage value is calculated along the following formula using the digital measurand: Vn = 8000 x Va - 8000 (for the linear range):

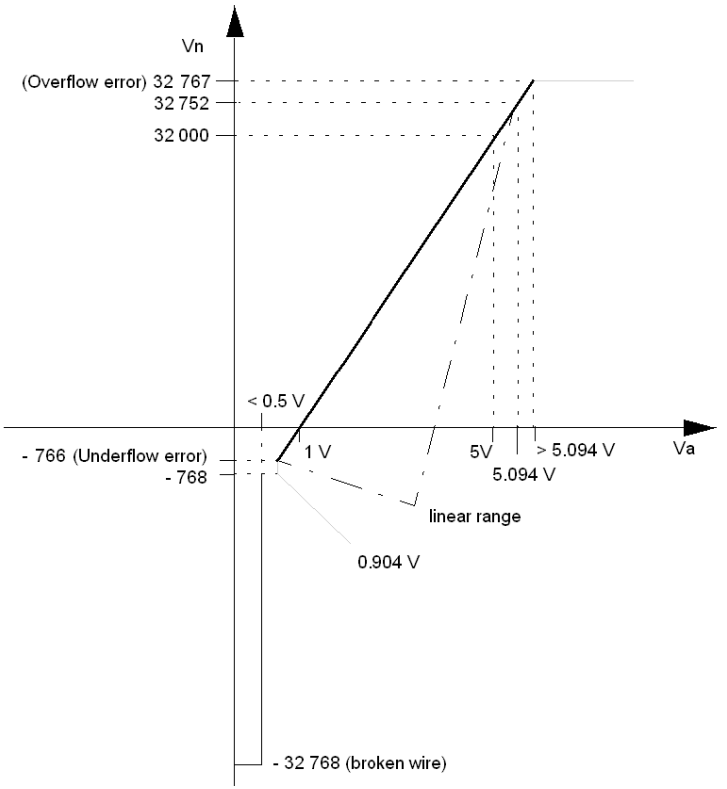

Input Range 4 ... 20 mA

The following diagram shows the analog/digital relation for the input measuring range 4... 20 mA. The current value is calculated along the following formula using the digital measurand: Vn = 2000 x Ia - 8000 (for the linear range). Disabled channels deliver a value of 0.

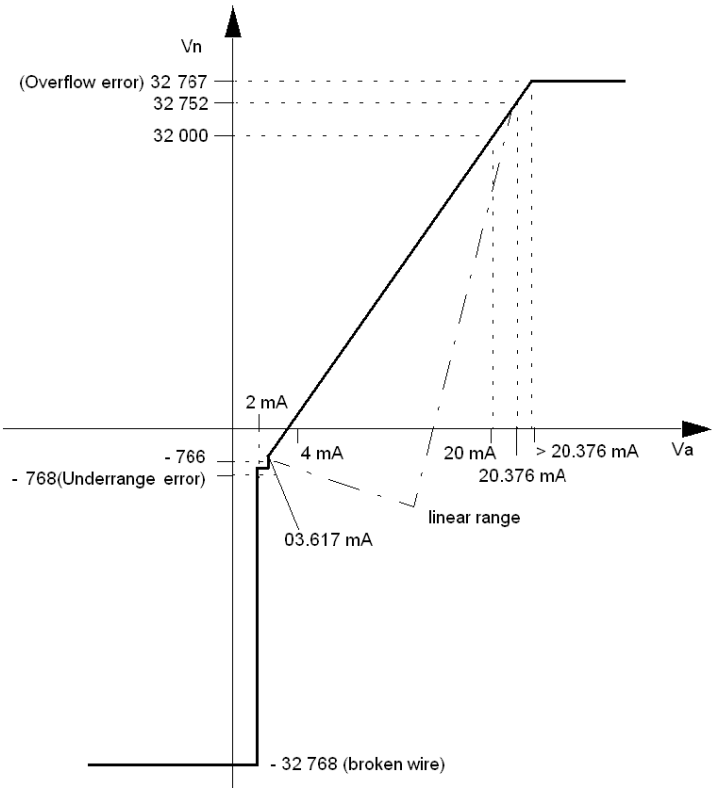

Output Range +/- 10 V

The following diagram shows the analog/digital relation for the output range +/- 10 V. When the bus is reset, the outputs use the configured parameters. If the module does not have valid parameters, the outputs will go to 0 V resp. 0 mA.The output voltage value is calculated along the following formula using the digital default value:Va = 1/3200 x Vn.

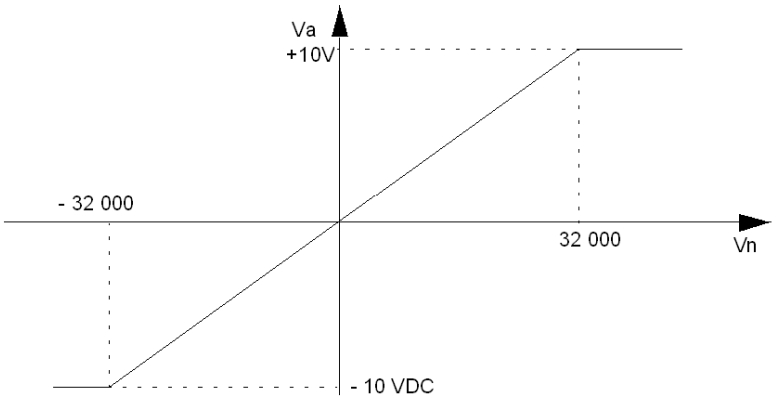

Output Range 0 ... 20 mA

The following diagram shows the analog/digital relation for the output range 0 ... 20 mA. When the bus is reset, the outputs use the configured parameters. If the module does not have valid parameters, the outputs will go to 0 V resp. 0 mA.The output current value is calculated along the following formula using the digital default value:Ia = 1/1600 x Vn

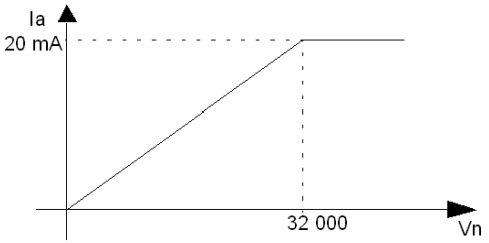

Error Messages

Overview

Error messages are stored in input word 5 (the 3x +4 register). This section explains how to interpret the bits in that register.

Diagram

This diagram explains the error message displayed by each bit. A value of 1 indicates the error has occurred

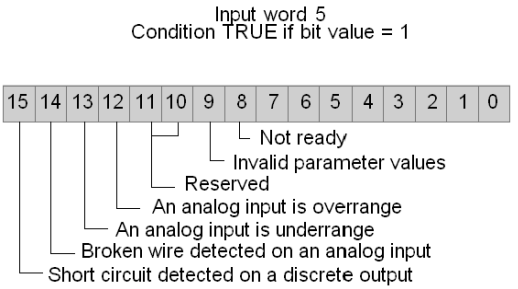

Not Ready (Bit 8)

This error occurs when the I/O base has not yet received valid parameters or has just received parameters for the first time and is checking them.

Invalid Parameters (Bit 9)

This error occurs when the I/O base refuses one or more invalid parameters. The base will continue working with the old parameters until it receives a complete set of valid parameters.

Overrange Indication (Bit 12)

This error occurs when the I/O base detects an overrange analog input value. The threshold is range-dependent.

Underrange Indication (Bit 13)

This error occurs when the I/O base detects an underrange analog input value. The threshold is range-dependent.

Broken Wire Detection (Bit 14))

Broken wire detection is possible for the 4 ... 20 mA range. In this case, a current signal that is less than 2 mA on one of the inputs is detected as a broken wire. The input word of that channel returns the value -32,768.

In the 1 ... 5 VDC range, broken wire detection is correctly seen as undervoltage detection. A voltage of less than 0.5 VDC on one of the input channels is recognized as broken wire. The input word of that channel returns the value -32,768.

In case of a broken wire, the input floats and bit 14 is not set in all cases. A reliable broken wire detection is only possible if a resistor is wired in parallel to the input terminals. This resistor will discharge the input capacity and broken wire detection will be available.

The value of this resistor depends on internal resistance of the sensor. Values too low might influence the input signal and values too high lengthen the time for broken wire detection. Normally, values of less than 100 kOhm are appropriate.

Short Circuit (Bit 15)

This error occurs when the I/O base detects a short circuit on a discrete output.

170 ANR 120 90 Unipolar Analog 6 Ch. In / 4 Ch. Out Module Base with 24 VDC I/O Points

35

Overview

This chapter describes the 170 ANR 120 90 TSX Momentum I/O base.

What's in this Chapter?

This chapter contains the following topics:

Topic	Page
Front Panel Components	588
Specifications	590
Internal Pin Connections	594
Field Wiring Guidelines	595
Wiring Diagrams	597
I/O Mapping	599
Output Words	602
Inputs Words	606
Input and Qutput Measuring Ranges	608
Error Messages	610

Front Panel Components

Overview

This section contains a photograph of the front panel of the 170 ANR 120 90 I/O base and a description of the LEDs.

Front Panel Illustration

The front panel of the I/O base is shown in the illustration below.

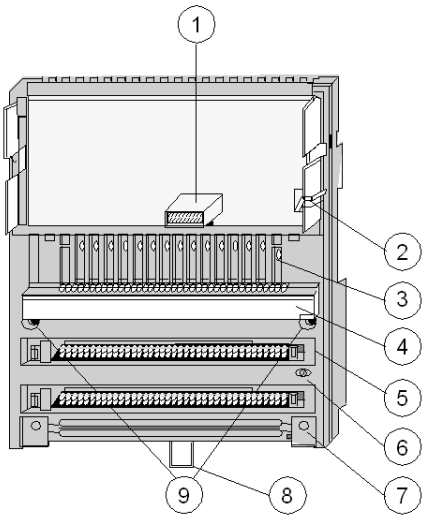

Components of the I/O module

Label	Description
1	Internal interface (ATI) connector
2	Locking and ground contact for the adapter
3	LED status display
4	Protective cover
5	Sockets for the terminal connectors
6	Grounding screw
7	Busbar mounting slot
8	Locking tab for DIN rail mount
9	Mounting holes for panel mount

LED Illustration

The LEDs are shown in the illustration below.

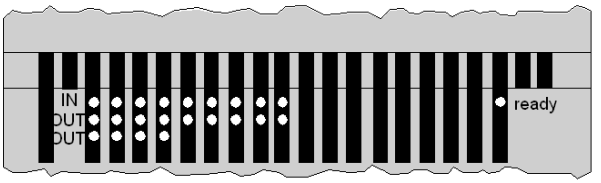

LED Descriptions

The LEDs are described in the table below.

LED	Color	Status	Meaning
Ready	Green	ON	I/O base is communicating with the comm adapter/CPU top hat. CPU must be in RUN state.
O1, O2, O3, O4, O5, O6, O7, O8	Green	ON	Indicates the corresponding discrete output point is ON
I1, I2, I3, I4, I5, I6, I7, I8	Green	ON	Indicates the corresponding input point is ON
AO1, AO2, AO3, AO4	Green	ON	Indicates the corresponding analog output channel is active

Specifications

Overview

This section contains specifications for the 170 ANR 120 90 I/O base.

NOTE: In order for the 170 ANR 120 90 module to comply with the Directives 73/23/EEC (LV) and 89/336/EEC (EMC) and the IEC standards, EN 61131-2:2003 and EN 55011, the module must be used with a Telemecanique power supply, model numbers ABL7 RE2403, ABL RE2405, or ABL RE2410.

General Specifications

Module type	Analog 6 inputs / 4 outputs Discrete 8 inputs / 8 outputs
Supply voltage	24 VDC
Supply voltage range	20-30 VDC
Supply current consumption	max. 400 mA
I/O map	12 input words 12 output words

Isolation

Between points	none
Between groups	none
Field to protective Earth	500 VAC

Protection

Discrete outputs	protected against overload and short-circuiting

EMC

Immunity	IEC 1131-2 Surge on auxiliary power supply 500 V
Emissions	EN 50081-2
ENV 50140	10 V/M
Agency Approval	UL, CSA, CE

Environment

Storage temperature	-40 TO 85 °C
Operating temperature	0 TO 60 °C
Humidity operating	95% RH @ 60 °C
Humidity non-operating	95% RH @ 60 °C
Vibration operating	10 - 57 HZ 0.075 MMDA 57-150 HZ 1
Shock non-operating	15 G, 11MS, 3 shocks/axis
Free fall (unpackaged)	0.1 meter

Physical Dimensions

Width	125 mm (4.9 in)
Depth (with no adapter)	40 mm (1.54 in)
Length	141.5 mm (5.5 in) no or one busbar 159.5 mm (6.3 in) two busbars 171.5 mm (6.75 in) three busbars
Weight	220 g (0.49 lb)

Analog Inputs

Number of input channels	Six single-ended
Range	0 to 10V
Input impedance	>1 megohm
Resolution	14 bits
Accuracy, 25 °C	0.2%
Linearity	
Integral linearity Differential linearity	0.006% Guaranteed monotonic
Temp coefficient	+ 100PPM/° C
Update time	0.75msec for all six channels
Data format	Left justified

Analog Outputs

Number of output channels	4
Range	0 to 10V
Resolution	14 bits
Accuracy, 25 °C	0.4%
Linearity	
Integral linearity Differential linearity	0.018% Guaranteed monotonic
Temp coefficient	+ 100PPM/° C
Update time	1.20 msec for all four channels
Data format	Left justified

Discrete Inputs

Number of points	8 sinking, type 2
Voltage and current thresholds	
ON (voltage)	>11VDC
OFF (voltage)	<5VDC
ON (current)	>6mA
OFF (current)	<2mA
Absolute maximum input Continuous	32VDC
Input response ON - OFF, OFF - ON	1.20msec maximum
Input protection	Resistor limited, varistors

Discrete Outputs

NOTE: The output current of a shortened output is limited to a nondestructive value. The short circuit heats the output driver and the output will switch off.

The output will switch on again if the driver leaves the overtemperature condition and the user resets the output under program control.

If the short circuit still exists after the output point is reset, the driver will reach the overtemperature condition again and will switch off again.

Number of output points	8 sourcing
Operating voltage	
Working	10 ... 30VDC
Absolute maximum	50VDC for 1msec
ON state drop / point	0.4VDC max at 0.25A
Maximum load current	
Each point	0.25A
Per module	2A
Off state leakage / point (max)	0.4mA @ 30VDC
Surge current maximum Per point	2.5A for 1msec
Response OFF-ON, ON-OFF	1.20msec max
Output protection (internal)	Voltage suppressor diodes, Wickman 2.5A Fuse

High-Speed Inputs and Electrical Noise

NOTE: When using high speed inputs on the 170 ANR 120 90 and 170 ANR 120 91 modules, the normal filtering of electrical transient events is not as effective as with other modules, and the inputs may respond to electrical noise in some environments.

Internal Pin Connections

Overview

This section contains an illustration showing the internal connections between terminals on the I/O base and an optional busbar.

Illustration

Rows 2 and 3 show the internal connections between terminals on the I/O base. Row 4 through 6 show the internal connections on the optional busbar.

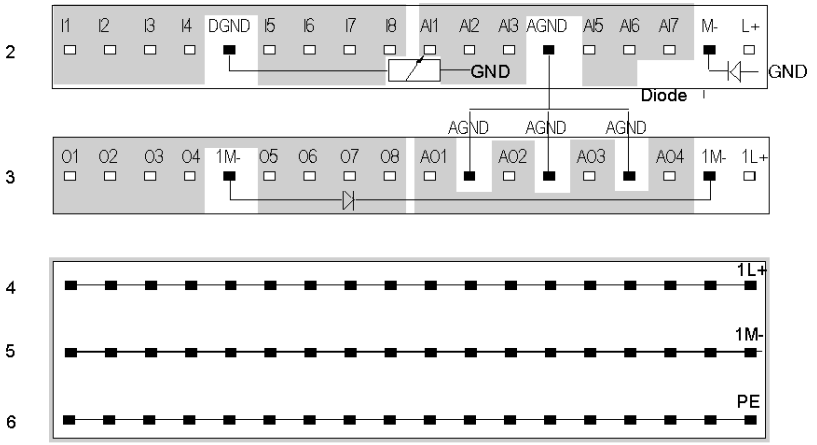

NOTE: AGND and DGND are seperated internally inside the module. External digital inputs must be returned the the DGND terminal. External analog circuits must be returned to AGND terminals.

Field Wiring Guidelines

Overview

Inputs are field wired to row 2 of the I/O base. Outputs are field wired to row 3. This section contains wiring guidelines and precautions for wiring the 170 ANR 120 90 TSX Momentum I/O base.

Terminal Connector

To connect field devices to the I/O base, you need a field wiring terminal connector. Schneider Electric sells terminal connectors in sets of three.

Type	Part Number
Screw-in	170 XTS 001 00
Spring-clip	170 XTS 002 00

Busbar May Be Required

Depending on the type of field devices you are using, you may need a 1-, 2-, or 3-row busbar. The following busbars are available from Schneider Electric.

Type	Number of Rows	Part Number
Screw-in	1 - row	170 XTS 006 01
	2 - row	170 XTS 005 01
	3 - row	170 XTS 004 01
Spring-clip	1 - row	170 XTS 007 01
	2 - row	170 XTS 008 01
	3 - row	170 XTS 003 01

Mapping Terminal Blocks

The folowing table shows mapping terminal blocks and optional busbars.

Row	Terminal	Connection	Description
2	1-4	I1 ... I4	Discrete inputs 1 through 4
	5	Digital ground	Return for discrete inputs
	6-9	I5 ... I8	Discrete inputs 5 through 8
	10-12	AI1 ... AI3	Analog inputs 1, 2, 3
	13	Analog ground	Return for analog inputs
	14-16	AI4 ... AI6	Analog inputs 4, 5, 6
	17	M-	Module operating voltage, 24VDC return
	18	L+	Module operating voltage, 24VDC
3	1-4	O1 ... O4	Discrete outputs 1 through 4
	5	1M-	Return for discrete outputs
	6-9	O5 ... O8	Discrete outputs 5 through 8
	10, 12, 14, 16	AO1, AO2, AO3, AO4	Analog outputs 1, 2, 3, 4
	11, 13, 15	Analog ground	Return for analog outputs
	17	1M-	Voltage for field devices, 24VDC return
	18	1L+	Voltage for field devices, 24VDC
4	1-18	PE	Earth ground for field devices

Wiring Diagrams

Overview

This section contains diagrams to assist you in wiring the following types of devices:

- Discrete input and output
- Analog input and output

Discrete I/O Devices

The diagram below shows an example of wiring for discrete I/O devices:

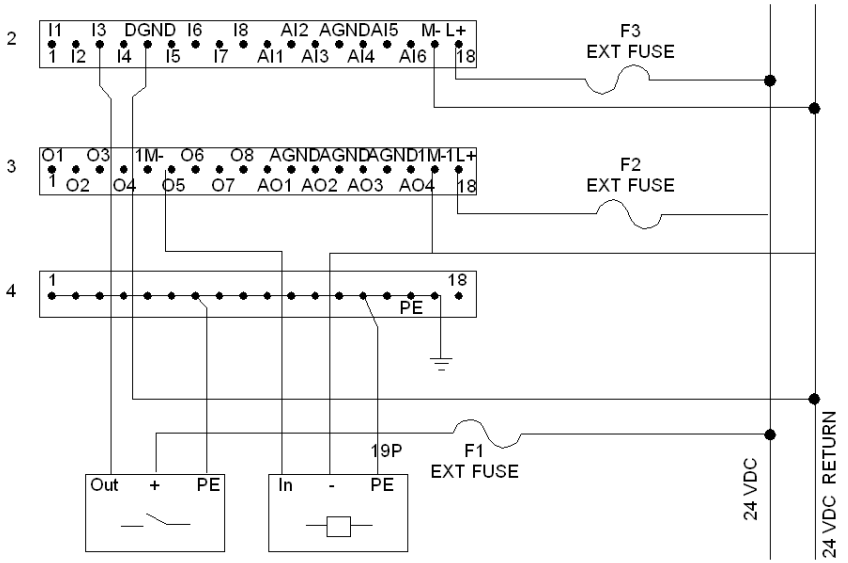

Recommended fuses:

- F1,F3-use a 1A fuse, Wickman 181110000 or equivalent
- F2 -use a 2.5A fuse, Wickman 181125000 or equivalent

Analog I/O Devices

The diagram below shows an example of wiring for Analog I/O devices:

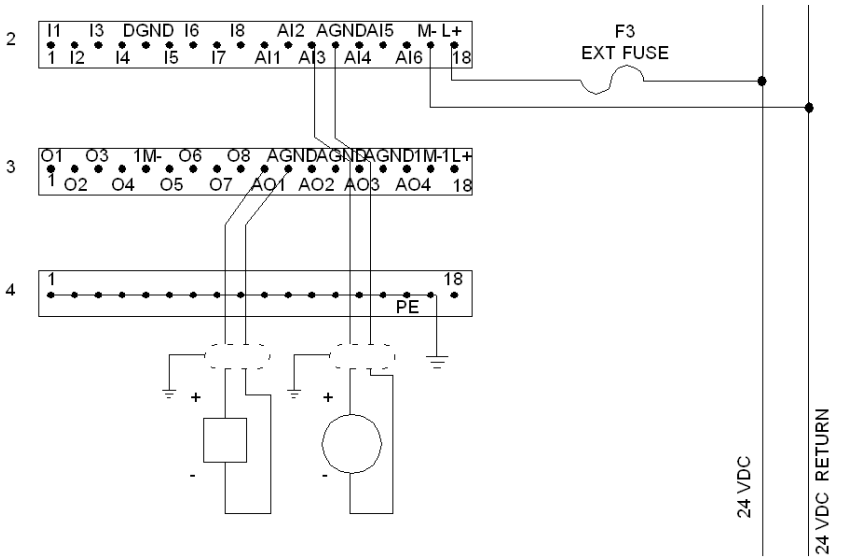

Recommended fuses:

- F3-use a 1A fuse, Wickman 18111000 or equivalent

I/O Mapping

Overview

The 170 ANR 120 90 TSX Momentum I/O base supports 6 analog inputs, 4 analog outputs,8 discrete inputs and 8 discrete outputs. This section contains information about the mapping of the output words into the analog/discrete output values, the usage of output words for channel configuration and the mapping of analog/discrete input values into input words.

I/O Map

The I/O base must be mapped as 12 contiguous input words and 12 contiguous output words, as follows:

Word	Input Data	Output Data
1	Status word (module status)	System information
2	State of the 8 discrete inputs	Register for discrete reaction in a fail state
3	Analog input word channel 1	Register for analog reaction in a fail state
4	Analog input word channel 2	User defined analog fail state values for channel 1
5	Analog input word channel 3	User defined analog fail state values for channel 2
6	Analog input word channel 4	User defined analog fail state values for channel 3
7	Analog input word channel 5	User defined analog fail state values for channel 4
8	Analog input word channel 6	State of the 8 discrete outputs
9	Not used	Analog output word channel 1
10	Not used	Analog output word channel 2
11	Not used	Analog output word channel 3
12	Not used	Analog output word channel 4

Analog I/O MAP

170 ANR 120 90 analog values are mapped as follows:

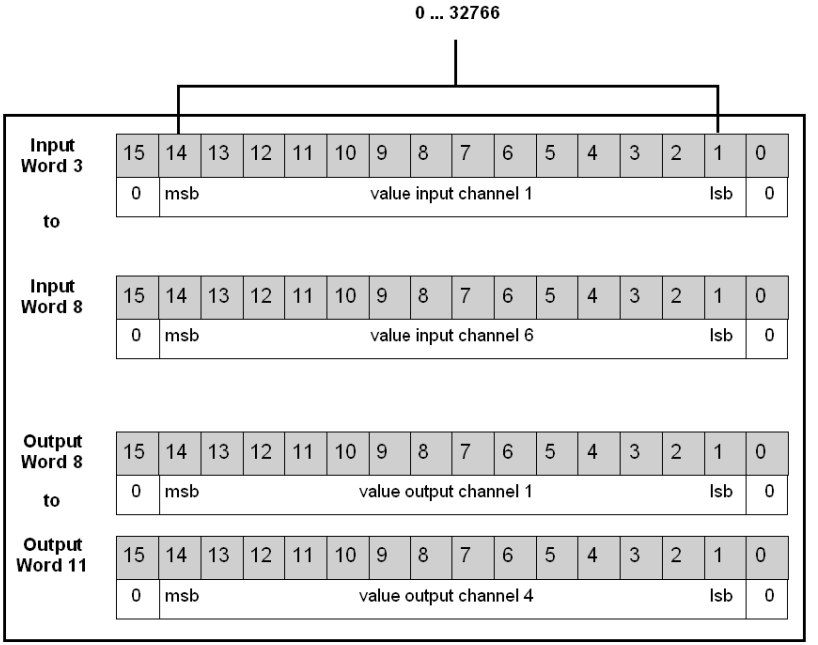

NOTE: The display is standardized and in each case the analog value will appear flush left.

Discrete I/O MAP

The 170 ANR 120 90 base returns eight discrete input bits to the Processor in one 16-bit word (3x). The input points are field wired to row 2 of the base. The Processor sends eight discrete output bits to the base as a single 16-bit word (4x). The output points are field wired to row 3. The figure below shows how the data is mapped between the base and the CPU.

:

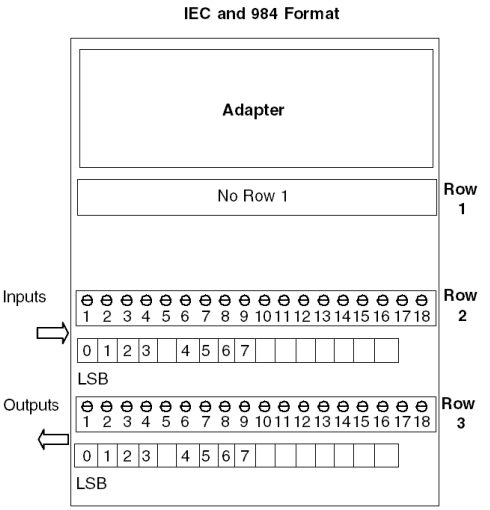

Output Words

Overview

This section describes how to use the output words to configure the analog and discrete I/O channels.

Words Used

170 ANR 120 90 analog and discrete output channels are configured by entering the appropriate information in output words 1 through 7 as follows.

NOTE: If you are using Modsoft, the parameter words are modified through the zoom screen.

The I/O base must be mapped as 12 contiguous input words and 12 contiguous output words, as follows:

Word	Output Data
1	System information
2	Register for discrete reaction in a fail state
3	Register for analog reaction in a fail state
4	User defined analog fail state values for channel 1
5	User defined analog fail state values for channel 2
6	User defined analog fail state values for channel 3
7	User defined analog fail state values for channel 4
8	State of the 8 discrete outputs
9	Analog output word channel 1
10	Analog output word channel 2
11	Analog output word channel 3
12	Analog output word channel 4

Word 1

⚠ CAUTION

INVALID DATA CAUSE OUTPUT SHUT DOWN

Do not use a zero value in word one because it causes an output shut down state, and no inputs or outputs are updated.

Failure to follow these instructions can result in injury or equipment damage.

System information

The following table tells how bits are assigned:

Word 1	Description
Bits 0 ... 14	Not used or can be used to start the module. (Turns on the Ready LED with any value greater than zero.)
Bit 15	1= Enable user defined shutdown values 2= Disables user defined shutdown values

- Valid setting for word one are 0001 ... FFFF It is essential for the module's operation to have a value larger than 0 in this register.
- The module's default value at power-up for this register is zero (module shut down.

Word 2

Discrete Fail State Reaction and Value Register

This word combines the value and reaction in a fail state:

Word 2	Description
Bits 0 ... 7	Discreet fail state value for outputs 1 8
Bits 8 ... 13	Not used
Bit 14	0= hold last value, 1= user defined value
Bit 15	0= all outputs reset, 1=check bit 14

Word 3

Analog Fail State Reaction Register

This word contains four 2 bit fields which define the fail state for each channel. The four possible values of fail state are as follows:

2 bit value	Fail State
00	Minimum output voltage
01	Hold last value (default)
10	User defined shutdown value
11	Hold last value

The following picture shows how the channels are mapped into word 3:

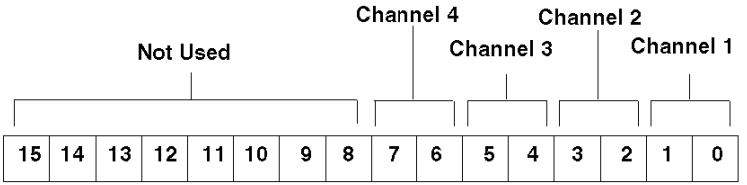

Words 4 ... 7

Analog Fail State Value Register

The module always expects four words of user defined data, even if the data is not used. The first word of the user shutdown field is used for channel 1, the second for channel 2, . . .

Word 8

Discrete Output RegisterThis word contains a right justified binary eight bit data field.

Words 9 ... 12

Map to Analog Output Register

Each word in this range contains a left justified, binary 15 bit data field. The range is 0 ... 7FFE hex (0 ... 32766 decimal), but the resolution is only 14 bit (See *Analog I/O MAP, page 600*).

NOTE: If a user shutdown value is greater than the count range for the channel, then the count range maximum value will be used as the shutdown value.

4x Registers

The 4x registers traffic copped to this module are used for output data as follows.

I/O Map Register	Data Type
4x + 7	Data for discrete output
4x + 8	Data for analog output channel 1
4x + 9	Data for analog output channel 2
4x + 10	Data for analog output channel 3
4x + 11	Data for analog output channel 4

Range

Output operating range

	Output Voltage	Data is left justified	Comment
Output Range	0 ... 10.000V	0 ... 32000	Nominal Output Voltage Range
Output Over Range	10.000 ... 10.238V	32002 ... 32764	Linear Over Range Output Voltage
Output Out of Range	>=10.238	32766 (7FFE Hex)	Threshold Will Be Limited To 32766 Decimal

Inputs Words

Overview

This section describes how to interpret the value of the input words.

Words Used

The status of the 170 ANR 120 90 module and the values of the analog and discrete input channels are contained in input words 1 through 8 as follows:

Word	Input Data
1	Status word (module status)
2	State of the 8 discrete inputs
3	Analog input word channel 1
4	Analog input word channel 2
5	Analog input word channel 3
6	Analog input word channel 4
7	Analog input word channel 5
8	Analog input word channel 6
9 ... 12	Not used

Word 1

The Status word (word 1) contains information about the health of the module and the status of the discrete outputs. Word 1 also contains network communication loss, over temperature of the discrete outputs and short circuit at the discrete outputs.

Bits 15 ... 9	Bit 8	Bits 7 ... 4	Bit 3 (Channel 7, 8)
Not used	0 = Bad module health (module lost communication) 1 = Healthy module	Not used	0 = Fault 1 = No fault

Bit 2 (Channel 5, 6)	Bit 1 (Channel 4, 3)	Bit 0 (Channel 1, 2)
0 = Fault 1 = No fault	0 = Fault 1 = No fault	0 = Fault 1 = No fault

Word 2

Discrete input register

This word contains a right justified binary eight bit data field.

Words 3 ... 8

Analog input register

Words 3 ... 8 map to the analog input register. Each word in this range contains a left justified 15 bit data field. The range is from 0H to 7FFE hex, but the resolution is 14 bit. (0 ... 32766 decimal or 0 ... 7FFE hex). See Analog I/O Map *(see page 600)*.

Words 9 ...12

Words 9 ... 12 are not used.

3x Registers

The 3x registers traffic copped to this module are used for input data as follows.

I/O Map Register	Data Type
3x + 1	Data for discrete input
3x + 2	Data for analog input channel 1
3x + 3	Data for analog input channel 2
3x + 4	Data for analog input channel 3
3x + 5	Data for analog input channel 4
3x + 6	Data for analog input channel 5
3x + 7	Data for analog input channel 6

Range

Input operating range

	Input Voltage	Data is left justified	Comment
Input Range	0 ... 10.000V	0 ... 32000	Nominal Input Voltage Range
Input Over Range	10.000 ... 10.238V	32002 ... 32764	Nondestructive Tolerated Input Over Range Voltage
Input Out of Range	>=10.238	32766 (7FFE Hex)	Input Voltage Exceeding This Threshold May Damage The Module

Input and Qutput Measuring Ranges

Overview

This section contains illustrations explaining the analog/digital relation for the various input and output measuring ranges.

Input Range 0 -10 V

The following diagram shows the analog/digital relation for the input measuring range 0 - 10 V. The voltage value is calculated along the following formula using the digital measurand: Vn = 3200 x Va (for the linear range):

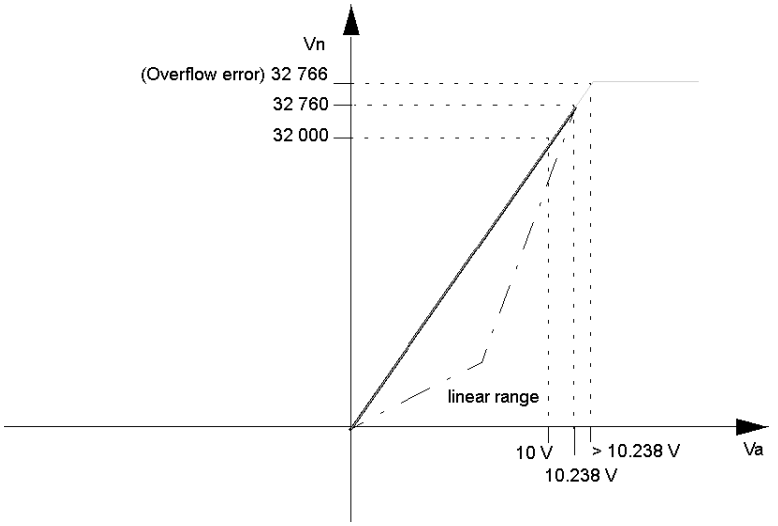

Output Range 0 -10 V

The following diagram shows the analog/digital relation for the output measuring range 0 -10 V. The voltage value is calculated along the following formula using the digital measurand: Vn = 3200 x Va (for the linear range):

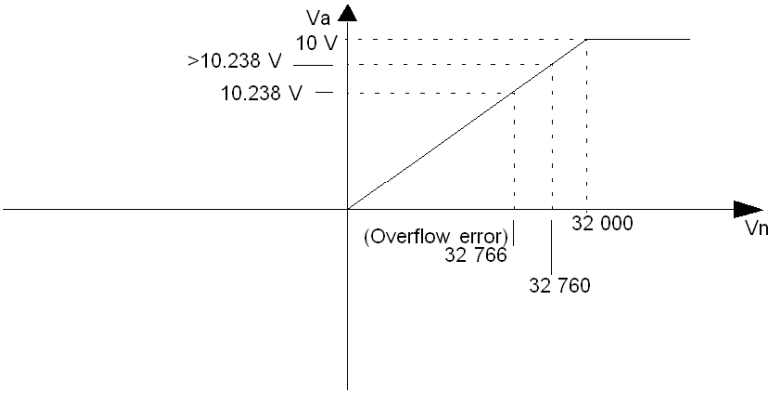

Error Messages

Interpreting the Error Bits

If an internal error is detected in the module, the module becomes nonoperational. Other error messages are posted in the four least significant bits of the status word.

170 ANR 120 91 Bipolar Analog 6 Ch. In / 4 Ch. Out Module Base with 24 VDC I/O Points

36

Overview

This chapter describes the 170 ANR 120 91bipolar analog TSX Momentum I/O base.

What's in this Chapter?

This chapter contains the following topics:

Topic	Page
Front Panel Components	612
Specifications	614
Internal Pin Connections	617
Field Wiring Guidelines	618
Wiring Diagrams	620
I/O Map	622
Register for Outputs	623
4x Registers	626
Register for Inputs	627
Analog Map	629
Discrete I/O Points and IEC Compliant Data Mapping	630
Input and Output Ranges	631
Interpreting the Error Bits	633

Front Panel Components

Overview

This section contains an illustration of the front panel of the 170 ANR 120 91 I/O base and a description of the LEDs.

Front Panel Illustration

The illustration below shows the front panel of the I/O base.

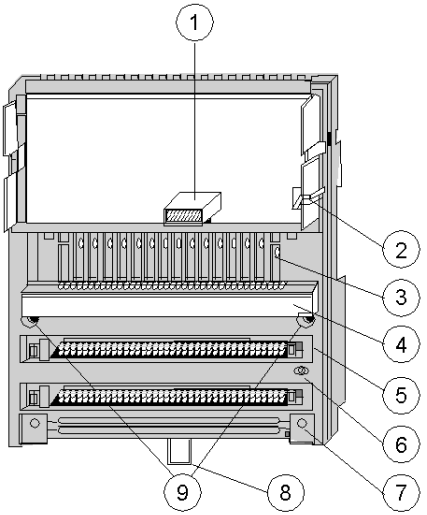

Components of the I/O Module:

Label	Description
1	Internal interface (ATI) connector
2	Locking and ground contact for the adapter
3	LED status display
4	Protective cover
5	Sockets for the terminal connectors
6	Grounding screw
7	Busbar mounting slot
8	Locking tab for DIN rail mount
9	Mounting holes for panel mount

LED Illustration

The illustration below shows the LEDs.

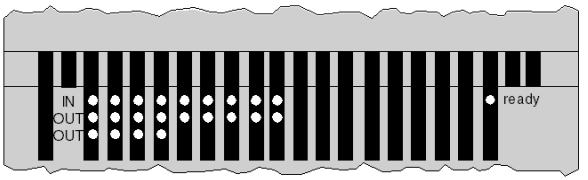

LED Descriptions

The following table describes the LEDs.

LED	Color	Status	Meaning
Ready	Green	ON	I/O base is communicating with the comm adapter/CPU top hat. CPU must be in RUN state.
O1, O2, O3, O4, O5, O6, O7, O8	Green	ON	Indicates the corresponding discrete output point is ON.
I1, I2, I3, I4, I5, I6, I7, I8	Green	ON	Indicates the corresponding input point is ON.
AO1, AO2, AO3, AO4	Green	ON	Indicates the corresponding analog output channel is active.

Specifications

Overview

This section contains specifications for the 170 ANR 120 91 TSX Momentum I/O base.

NOTE: In order for the 170 ANR 120 91 module to comply with the Directives 73/23/EEC (LV) and 89/336/EEC (EMC) and the IEC standards, EN 61131-2:2003 and EN 55011, the module must be used with a Telemecanique power supply, model numbers ABL7 RE2403, ABL RE2405, or ABL RE2410.

General Specifications

The following table contains general specifications for the I/O base. Each discrete output is protected against short-circuiting and overload.

Electrical	
Module current	400 mA at 19.2 Vdc to 30 Vdc
EMC for industrial environment	
Immunity	IEC 1131-2 Surge on auxiliary power supply 500 V
Emissions	EN 50081-2
ENV 50140	10 V/M
Agency approvals	UL, CSA, CE
Isolation	
Between points	None
Between groups	None
Field to protective Earth	500 VAC
Environmental	
Storage temperature	-40 to 85° C
Operating temperature	0 to 60° C
Humidity operating	95% RH @ 60° C
Humidity non-operating	95 RH @ 60° C
Vibration operating	10 - 57 HZ 0.075 MMDA 57 - 150 HZ 1 G
Shock non-operating	15 G, 11 MS, 3 shocks/axis
Free fall (unpackaged)	0.1 meter

Analog Inputs

Number of input channels	Six single-ended
Range	±10V
Input impedance	>1 megohm
Resolution	14 bits
Accuracy, 25 °C	0.2%
Linearity integral Linearity differential	0.006% Guaranteed monotonic
Temp coefficient	+ 100PPM/° C
Update time	0.75 msec for all six channels
Data format	Left justified

Analog Outputs

Number of input Channels	4
Range	±10V
Resolution	14 bits
Accuracy, 25 °C	0.4%
Linearity integral Linearity differential	0.018% Guaranteed monotonic
Temp coefficient	+ 100PPM/° C
Update time	1.20 msec for all four channels
Data format	Left justified

Discrete Inputs

Number of points	8 sinking, type 2
Voltage and current thresholds ON (voltage) OFF (voltage) ON (current) OFF (current)	 >11 VDC <5 VDC >6 mA <2 mA
Absolute maximum input Continuous	 32 VDC
Input response ON - OFF, OFF - ON	 1.20 msec maximum
Input protection	Resistor limited, varistors

Discrete Outputs

NOTE: The output current of a shortened output is limited to a nondestructive value. The short circuit heats the output driver, and the output will switch off.

The output will switch on again if the driver leaves the over temperature condition and the user resets the output under program control.

If the short circuit still exists after the output point is reset, the driver will reach the over temperature condition again, and will switch off again.

Number of output points	8 sourcing
Operating voltage Working Absolute maximum	 10 ... 30 VDC 50 VDC for 1 msec
ON state drop / point	0.4 VDC max at 0.25 A
Maximum load current Each point Per module Off state leakage / point (max)	 0.25 A 2A 0.4 mA @ 30 VDC
Surge current maximum Per point	 2.5 A for 1 msec
Response OFF-ON, ON-OFF	 1.20 msec max
Output protection (internal)	Voltage suppressor diodes, Wickman 2.5A fuse

Physical Dimensions

Width	125 mm (4.9 in)
Depth (with no adapter)	40 mm (1.54 in)
Length	141.5 mm (5.5 in) no or one busbar 159.5 mm (6.3 in) two busbars 171.5 mm (6.75 in) three busbars
Weight	220 g (0.49 lb)

High-Speed Inputs and Electrical Noise

NOTE: When using high speed inputs on the 170 ANR 120 90 and 170 ANR 120 91 modules, the normal filtering of electrical transient events is not as effective as with other modules, and the inputs may respond to electrical noise in some environments.

Internal Pin Connections

Overview

This section contains an illustration showing the internal connections between terminals on the I/O base and an optional busbar.

Illustration

The following illustration shows the internal connections between terminals.

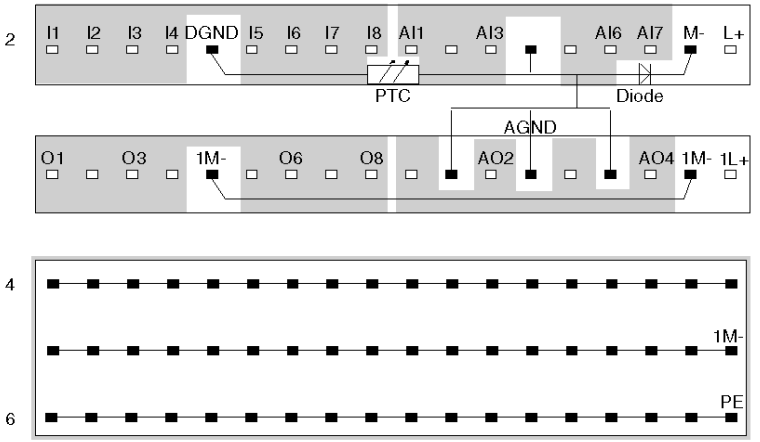

NOTE: AGND and DGND are connected at a single point inside the module. External digital inputs must be returned to the DGND terminal. External analog circuits must be returned to AGND terminals.

Field Wiring Guidelines

Overview

This section contains wiring guidelines and precautions for wiring the 170 ANR 120 91 TSX Momentum I/O base.

Terminal Connector

To connect field devices to the I/O base, you need a field wiring terminal connector. Schneider Automation sells terminal connectors in sets of three.

Type	Part Number
Screw-in	170 XTS 001 00
Spring-clip	170 XTS 002 00

Busbar May Be Required

Depending on the type of field devices you are using, you may need a 1-, 2-, or 3-row busbar. The following busbars are available from Schneider Automation.

Type	Number of Rows	Part Number
Screw-in	1 - row	170 XTS 006 01
	2 - row	170 XTS 005 01
	3 - row	170 XTS 004 01
Spring-clip	1 - row	170 XTS 007 01
	2 - row	170 XTS 008 01
	3 - row	170 XTS 003 01

Mapping Terminal Blocks and Busbars

The following table shows mapping terminal blocks and optional busbars.

Row	Terminal	Connection	Description
2	1-4	I1 ... I4	Discrete inputs 1 through 4
	5	Digital ground	Return for discrete inputs
	6-9	I5 ... I8	Discrete inputs 5 through 8
	10-12	AI1 ... AI3	Analog inputs 1, 2, 3
	13	Analog ground	Return for analog inputs
	14-16	AI4 ... AI6	Analog inputs 4, 5, 6
	17	M-	Module operating voltage, 24VDC return
	18	L+	Module operating voltage, 24VDC
3	1-4	O1 ... O4	Discrete outputs 1 through 4
	5	1M-	Return for discrete outputs
	6-9	O5 ... O8	Discrete outputs 5 through 8
	10, 12, 14, 16	AO1, AO2, AO3, AO4	Analog outputs 1, 2, 3, 4
	11, 13, 15	Analog ground	Return for analog outputs
	17	1M-	Voltage for field devices, 24VDC return
	18	1L+	Voltage for field devices, 24VDC
4	1-18	PE	Earth ground for field devices

Wiring Diagrams

Overview

This section contains diagrams to assist you in wiring the following types of devices:

- Discrete input and output
- Analog input and output

Discrete I/O Devices

The diagram below shows field wiring for discrete input and discrete output devices.

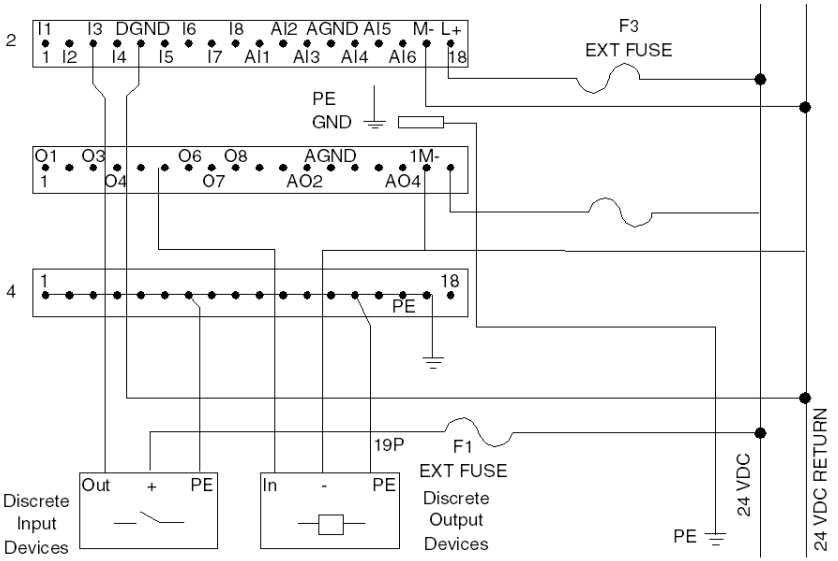

Recommended fuses:

- F1,F3-use a 1A fuse, Wickman 19181-1A or equivalent
- F2 -use a 2.5A fuse, Wickman 19181-2.5A or equivalent

Analog I/O Devices

The diagram below shows field wiring for analog input and analog output devices.

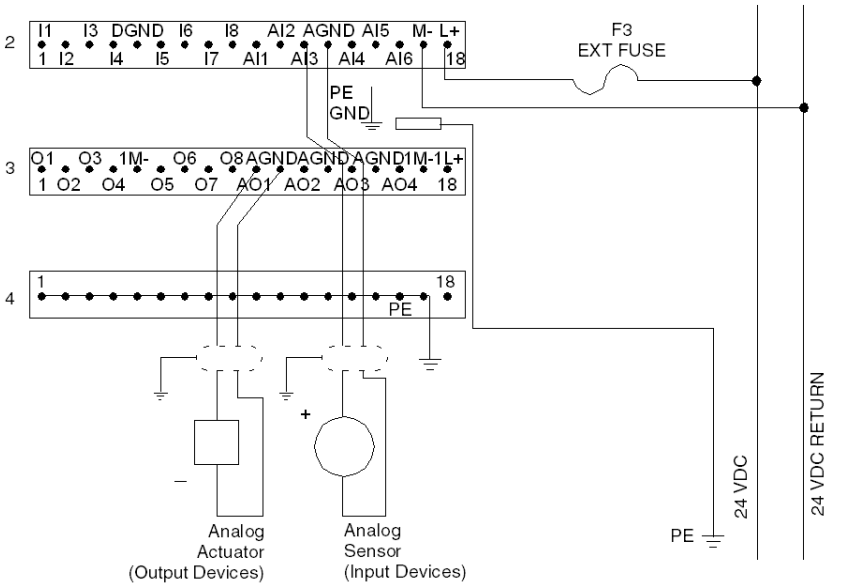

Recommended fuses:

- F3-use a 1A fuse, Wickman 19181-1A or equivalent

I/O Map

I/O Map Module Configuration

The module must be I/O mapped as 12 contiguous input and output words. The first 7 output words are parameter data.

Register for Outputs

Overview

170 ANR 120 91 analog and discrete output channels are configured by entering the appropriate information in output words 1 through 7 as follows.

NOTE: The module will go to fail state values if network or communication adapter ATI communication is lost.

Word	Function
1	System information
2	Register for discrete reaction in a fail state
3	Register for analog reaction in a fail state
4	User defined analog fail state values for channel 1
5	User defined analog fail state values for channel 2
6	User defined analog fail state values for channel 3
7	User defined analog fail state values for channel 4
8	State of the 8 discrete outputs
9	Analog output word channel 1
10	Analog output word channel 2
11	Analog output word channel 3
12	Analog output word channel 4

Word 1

⚠ CAUTION

INVALID DATA CAUSE OUTPUT SHUT DOWN

Do not use a zero value in word one because it causes an output shut down state, and no inputs or outputs are updated.

Failure to follow these instructions can result in injury or equipment damage.

System Info Register

This word enables the module's operation, and specifies if user shutdown values are expected.

Word 1	Description
Bits 0 ... 14	Not used or can be used to start the module. (Turns on the Ready LED with any value greater than zero.)
Bit 15	1 = Enable user defined shutdown values. 2 = Disables user defined shutdown values.

- Valid setting for word one are 0001 ... FFFF.
  It is essential for the module's operation to have a value larger than 0 in this register.
- The module's default value at power-up for this register is zero (module shut down).

Word 2

Discrete Fail State Reaction and Value Register

This word combines the value and reaction in a fail state.

Word 2	Description
Bit 0 ... 7	Discrete fail state value for outputs 1 ... 8
Bits 8 ... 13	Not used
Bit 14	0 = hold last value, 1 = user defined value
Bit 15	0 = all outputs reset, 1 = check bit 14

Word 3

Analog Fail State Reaction Register

This word contains four 2 bit fields that define the fail state for each channel. The four possible values of fail state are as follows.

2 Bit Value	Fail State
00	Minimum output voltage
01	Hold last value (default)
10	User defined shutdown value
11	Hold last value (not normally used)

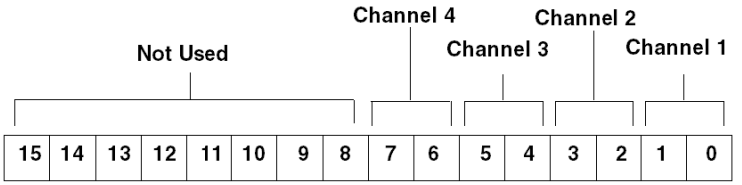

Words 4 ... 7

Analog Fail State Value Register

The module always expects four words of user defined data, even if the data is not used. The first word of the user shutdown field is used for channel 1, the second for channel 2, . . .

Word 8

Discrete Output Register

This word contains a right justified binary eight bit data field.

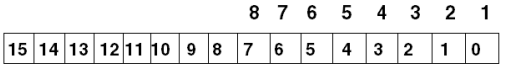

Words 9 ... 12

Map to Analog Output Register

Each word in this range contains a left justified binary 15 bit data field. The range is 0 ... 7FFE hex (0 ... 32766 decimal), but the resolution is only 14 bit *(see page 629)*.

NOTE: If a user shutdown value is greater than the count range for the channel, then the count range maximum value will be used as the shutdown value.

4x Registers

Overview

The 4x registers traffic copped to this module are used for output data as follows.

I/O Map Register	Data Type
4x + 7	Data for discrete output
4x + 8	Data for analog output channel 1
4x + 9	Data for analog output channel 2
4x + 10	Data for analog output channel 3
4x + 11	Data for analog output channel 4

Range

Output Operating Range

	Output Voltage	Data is Left Justified	Comment
Output Range	-10.000 ... +10.000	00382 ... 32382	Nominal output voltage range
Output Over Range	+10.000 ... +10.238	32384 ... 32764	Linear over range output voltage
Output Out of Range	≥10.238	32766 (7FFE Hex)	Threshold will be limited to 32766 decimal.
Output Under Range	-10.238 ... -10.000	00002 ... 00382	Linear under voltage range
Output Out of Range	≤10.238	00000	Threshold limited to 00000.

Register for Inputs

Overview

The Input Register is arranged as follows.

Word	Function
1	Status word (module status)
2	State of the eight discrete inputs
3	Analog input word channel 1
4	Analog input word channel 2
5	Analog input word channel 3
6	Analog input word channel 4
7	Analog input word channel 5
8	Analog input word channel 6
9 ... 12	Not used

Word 1

The status word (word 0) contains information about the health of the module and the status of the discrete outputs. Word 0 also contains network communication loss, over temperature of the discrete outputs and short circuit at the discrete outputs.

Bits 15 ... 9	Bit 8	Bits 7 ... 4	Bit 3 (Channel 7, 8)
Not used	0 = Bad module health (module lost communication) 1 = Healthy module	Not used	0 = Fault 1 = No Fault

Bit 2 (Channel 5, 6)	Bit 1 (Channel 4, 3)	Bit 0 (Channel 1, 2)
0 = Fault 1 = No fault	0 = Fault 1 = No fault	0 = Fault 1 = No fault

Word 2

Discrete Input Register

This word contains a right justified binary eight bit data field.

							8	7	6	5	4	3	2	1	
15	14	13	12	11	10	9	8	7	6	5	4	3	2	1	0

Words 3 ... 8

Analog Input Register Words 3 ... 8 map to the analog input register. Each word in this range contains a left justified 15 bit data field. The range is from 0H to 7FFE hex, but the resolution is 14 bit (0 ... 32766 decimal or 0 ... 7FFE hex). See *(see page 629)*.

Words 9 ... 12

Words 9 ... 12 are not used.

3x Registers

The 3x registers traffic copped to this module are used for input data as follows.

I/O Map Register	Data Type
3x + 1	Data for discrete input
3x + 2	Data for analog input channel 1
3x + 3	Data for analog input channel 2
3x + 4	Data for analog input channel 3
3x + 5	Data for analog input channel 4
3x + 6	Data for analog input channel 5
3x + 7	Data for analog input channel 6

Range

Input Operating Range

	Input Voltage	Data is Left Justified	Comment
Input Range	-10.000 ... +10.000	00382 ... 32382	Nominal input voltage range
Input Over Range	+10.000 ... +10.238	32384 ... 32764	Linear over range input voltage
Input Out of Range	≥10.238	32766 (7FFE Hex)	Input voltage exceeding threshold may damage the module.
Input Under Range	-10.238 ... -10.000	00002 ... 00382	Linear under voltage range
Input Out of Range	≤10.238	00000	Input voltage exceeding threshold may damage the module.

Analog Map

Overview

170 ANR 120 91 analog values are mapped as follows.

NOTE: The display is standardized, and, in each case, the analog value will appear flush left.

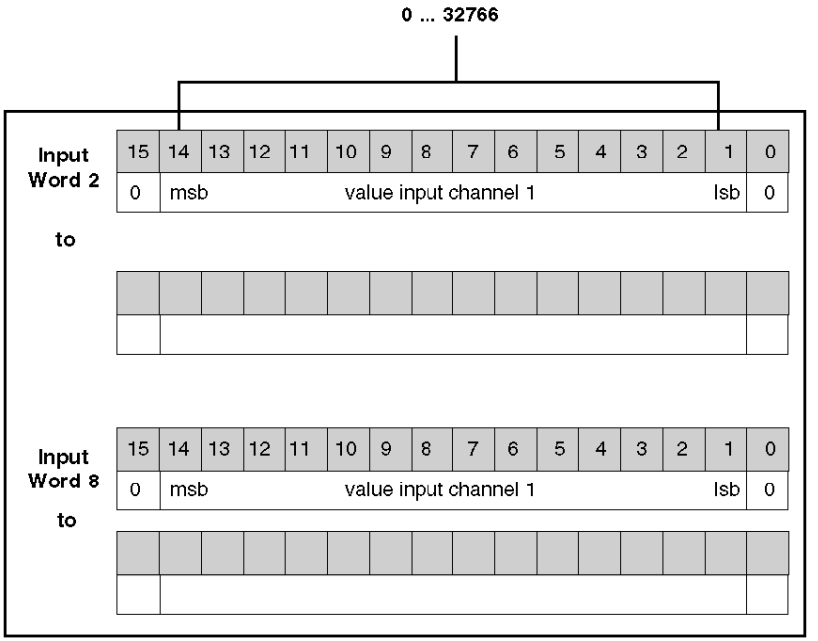

NOTE: The module resolution is 14-bit (0 ... 32766 decimal or 0 ... 7FFE hex).

Discrete I/O Points and IEC Compliant Data Mapping

Overview

The 170 ANR 120 91 base returns eight discrete input bits to the processor in one 16-bit word (3x). The input points are field wired to row 2 of the base. The processor sends eight discrete output bits to the base as a single 16-bit word (4x). The output points are field wired to row 3.

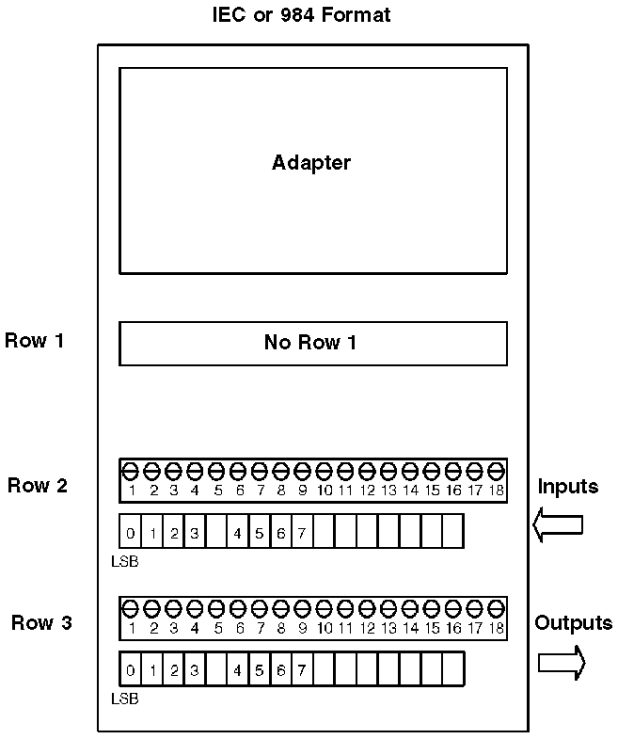

Input and Output Ranges

Ranges and Decimal Values Input Measuring Range ±10 V

The voltage value is calculated with the following formula using the digital measurand: Vn = 1600 Va + 16382 (for the linear range).

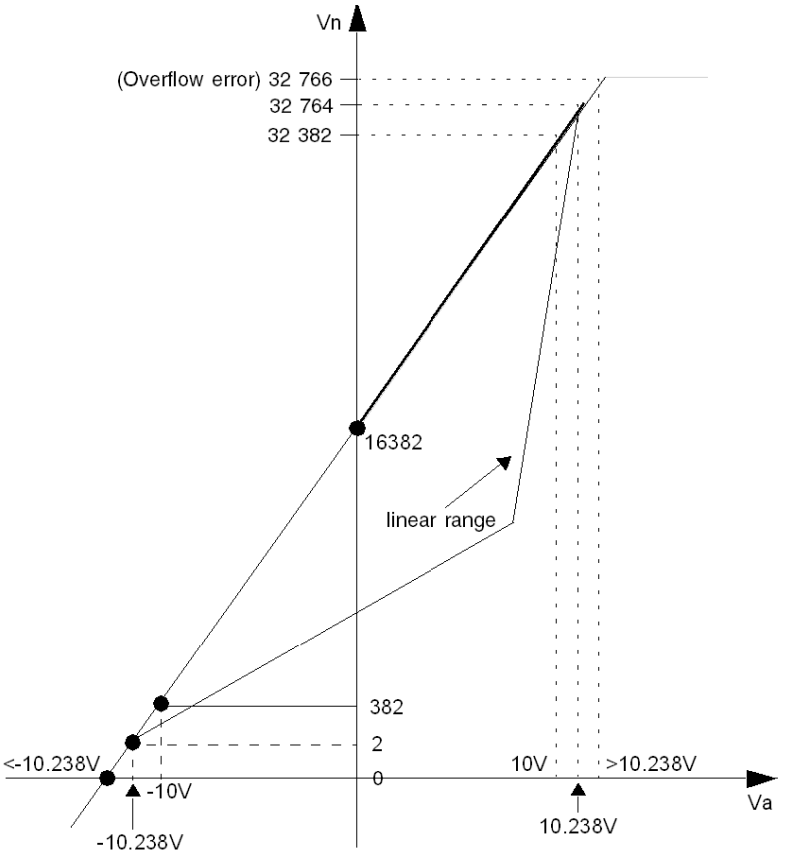

Output Measuring Range ±10 V

The voltage value is calculated with the following formula using the digital measurand: Vn = 1600 Va + 16382 (for the linear range).

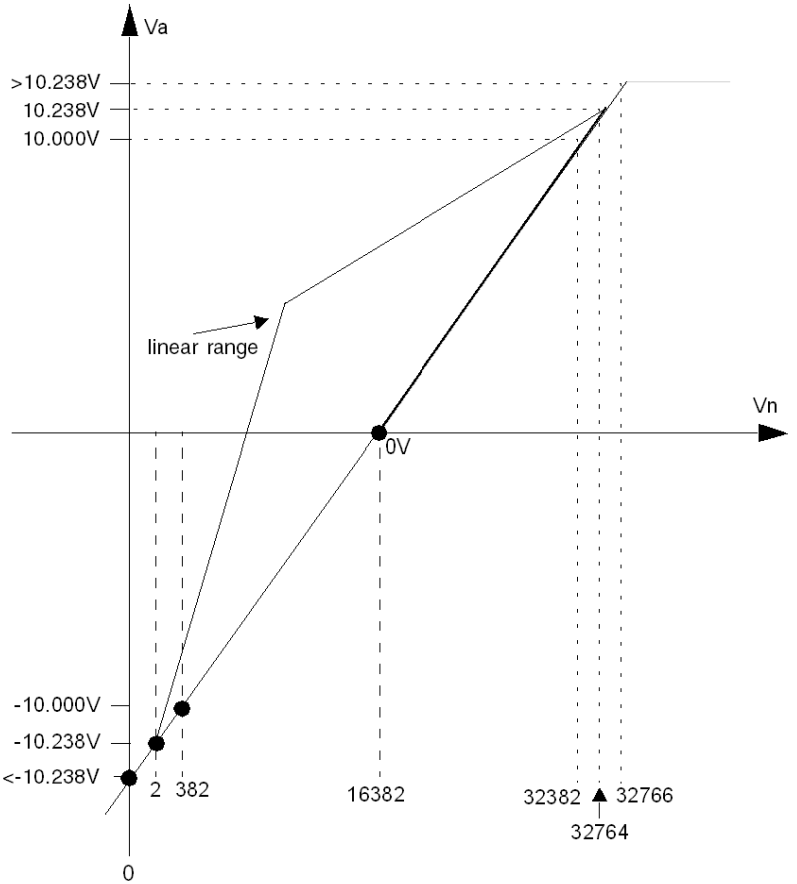

Interpreting the Error Bits

Overview

If an internal error is detected in the module, the module becomes non-operational. Other error messages are posted in the four least significant bits of the status word.

170 ARM 370 30 24 VDC - 10 Pt. In / 8 Pt. Relay Out Module Base (120 VAC Powered)

37

Overview

This chapter describes the 170 ARM 370 30 TSX Momentum I/O base.

What's in this Chapter?

This chapter contains the following topics:

Topic	Page
Front Panel Components	636
Specifications	638
Internal Pin Connections	641
Field Wiring Guidelines	642
Wiring Diagrams	645
I/O Mapping	648

Front Panel Components

Overview

This section contains an illustration of the front panel of the 170 ARM 370 30 I/O base and a description of the LEDs.

Front Panel Illustration

The front panel of the I/O base is shown in the illustration below.

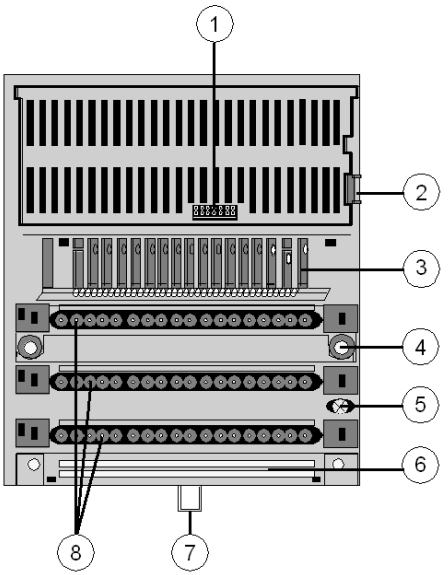

Components of the I/O module

Label	Description
1	Internal interface (ATI) connector
2	Locking and ground contact for the adapter
3	LED status display
4	Mounting holes for panel mount
5	Grounding screw
6	Busbar Mounting Slot
7	Locking tab for DIN rail mount
8	Sockets for the terminal connectors

LED Illustration

The LEDs are shown in the illustration below.

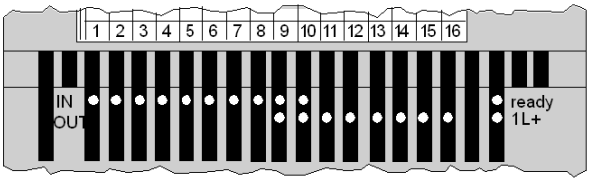

LED Descriptions

The LEDs are described in the table below.

Indicator	Condition	Message
Ready	Green	Module is ready to communicate. Operating voltage for internal logic (5 V) is present.
	Off	Module not ready.
1L+	Green	Input voltage of inputs 1 ... 10 is present
	Off	Input voltage of inputs 1 ... 10 is not present
Upper row IN 1...10	Green	Input status (an LED per input); Input point active, ie. input carries a 1 signal (logically ON)
	Off	Input status (an LED per input); Input point inactive, ie. input carries a 0 signal (logically OFF)
Middle row OUT 9 ...16	Green	Output status (an LED per output); Output point active, ie. output carries a 1 signal (logically ON)
	Off	Output status (an LED per output) Output point inactive, ie. Output carries a 0 signal (logically OFF)

Specifications

Overview

This section contains specifications for the 170 ARM 370 30 I/O base.

General Specifications

Module type	10 discrete inputs in 1 group 8 relay outputs as normally open contacts in 2 groups, 4 pts/group
Supply voltage	120 VAC
Supply voltage range	85 ... 132 VAC RMS @ 47 ... 63 Hz
Supply current consumption	max. 250 mA at 120 VAC
Power dissipation	5.5 W typical 8.5 W max
I/O map	1 input word 1 output word

Isolation

Input to input	none
Output group to output group	1 780 VAC RMS
Input to output	1 780 VAC RMS
Output group to communication adapter	1 780 VAC RMS
Field to communication adapter	Defined by communication adapter type

Fuses

Internal	1A slowblow
External: input voltage (1L+)	max. 4 A fast-blow (193140000 or equivalent)
External: output voltage (1L1, 2L1)	According to the supply of the connected actuators– not to exceed 8 A slow-blow/ group.

Physical Dimensions

Width	125 mm (4.9 in)
Depth (with no adapter)	40 mm (1.54 in)
Length	141.5 mm (5.5 in) no or one busbar 159.5mm (6.3in) two busbars 171.5 mm (6.75in) three busbars
Weight	260 g (0.57lb)

Discrete Inputs

Number of points	10
Number of groups	1
Signal type	True High
IEC 1131 type	1+ (see appendix *(see page 673)* for definitions of IEC input types)
ON voltage	+11 ... +30 VDC
OFF voltage	-3 ... +5 VDC
Input current	2.5 mA minimum ON (6 mA at 24 VDC) 1.2 mA maximum OFF
Input voltage range	-3 ... +30 VDC
Input resistance	4 kOhm
Response time	2.2 ms OFF to ON 3.3 ms ON to OFF

Relay Outputs

Output type		Relay normally open output
Number of points		8
Number of groups		2
Points per group		4
Current capacity	20 VDC	> 5 mA (but only for new contacts) max 2 A (switching current <= 5 A) ohmic load max 1 A (L/R <= 40 ms) inductive load
	115 VDC	max. 0.5 A (switching current <= 1.5 A) ohmic load max. 0.15 A (L/R <= 40 ms) inductive load
	24 VAC	max. 2A (switching current <= 5 A) cos ϕ = 1 max. 1 A cos ϕ = 0.5
Relay type		Normally Open
Leakage current (output out)		< 1.2 mA @ 115 VAC
Fault sensing		None
Fault reporting		None
Error indication		None
Response time (resistive load / 0.5 A		10 ms @ 60 Hz OFF to ON 10 ms @ 60 Hz ON to OFF
Maximum switching cycles		> 30 x 10^6 (mechanical) >=1 x 10^5 (inductive load with external protective circuitry)

Internal Pin Connections

Overview

This section contains an illustration showing the internal connections between terminals on the I/O base.

Illustration

Rows 1 through 3 show the internal connections between terminalson the I/O base. Row 4 shows the internal connections on the optional busbar.

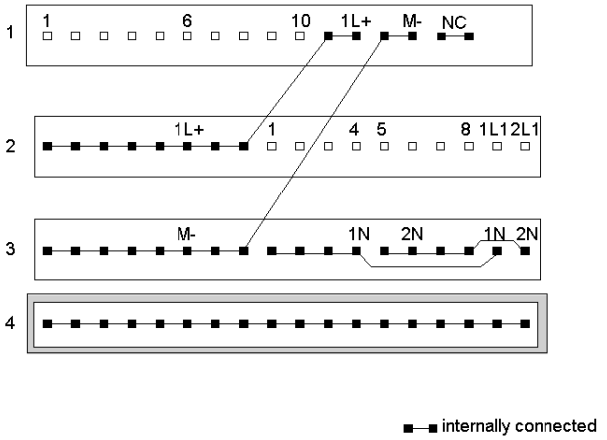

Field Wiring Guidelines

Overview

Inputs are field wired to row 1 of the base. The outputs are field wired to row 2. This section contains wiring guidelines and precautions.

Terminal Connector

To connect field devices to the I/O base, you need a field wiring terminal connector. Schneider Electric sells terminal connectors in sets of three.

Type	Part Number
Screw-in	170 XTS 001 00
Spring-clip	170 XTS 002 00

Busbar May Be Required

Depending on the type of field devices you are using, you may need a 1-row busbar. The following busbars are available from Schneider Electric.

Type	Part Number
Screw-in	170 XTS 006 01
Spring-clip	170 XTS 007 01

Mapping Terminal Blocks

⚠ CAUTION

POTENTIAL FOR SHORT CIRCUITS AND/OR POWER-UP SPIKES

Provide external fuses on the operating voltage to protect the module. Appropriate fuse values are shown in the wiring illustration. An unprotected module may be subject to short circuits and/or power-up spikes.

Failure to follow these instructions can result in injury or equipment damage.

The following table shows mapping terminal blocks and optional busbars.

Row	Terminal	Function
1	1...10	Inputs
	11, 12	Input voltage for terminal pins 9 ... 10, (1L+)
	13, 14	Return (M-) for the inputs
	15, 16	Not connected
	17	Return (N) for the module's operating voltage
	18	120 VAC Operating voltage (L1)
2	1 ... 8	Input voltage for pins 1 ... 8, (1L+)
	9 ... 12	Outputs for group 1
	13 ... 16	Outputs for group 2
	17	Output Voltage for relays 1 ... 4 (1L1, 20 ... 115 VDC or 24 ... 115 VAC
	18	Output Voltage for relays 5 ... 8 (2L1, 20 ... 115 VDC or 24 ... 115 VAC
3	1 ... 8	Return (M-) for the inputs
	9, 10, 11, 12	Return (1N) for the relays 1 ... 4
	13, 14, 15, 16	Return (2N) for the relays 5 ... 8
	17/18	Return/Neutral for relay outputs
4	1 ... 18	Protective earth (PE)

Protective Circuit Required

To reduce the effects of radiated noise, you must add snubbing components across inductive load devices. The following table provides generic selection guidelines:

Type of Load	Suppression Device	Minimum Component Rating
AC circuits	50 Ω resistor in series with a 0.47 µfd nonpolarized capacitor across the load	for 120 VAC-powered loads 200_VAC
DC circuits	a reverse-biased clamping diode across the load	2 A and greater than twice the maximum load voltage

Consult relay and contactor manufacturers' catalogs for commercial suppression devices matched to your particular products.

Wiring Inputs to Avoid Error Messages

To avoid I/O error messages, follow these guidelines when wiring.

- Inputs require a 56 kΩ resistor parallel to the contact. Otherwise the I/O error signal will be active as long as the input carries 0 signal.
- Unused inputs have to be wired to the sensor supply or to L+ on row 3 directly (logical 1) or with 56 kΩ (logical 0) to avoid permanently active I/O error message.

Wiring Diagrams

Overview

This section provides diagrams to assist you in wiring the following types of devices:

- 3-wire sensor with a 2-wire actuator
- 4-wire sensor with a 3-wire actuator

3-Wire Sensor with a 2-Wire Actuator

The diagram below shows field wiring for a 3-wire (24 VDC) sensor and a 2-wire (115 VAC) actuator.

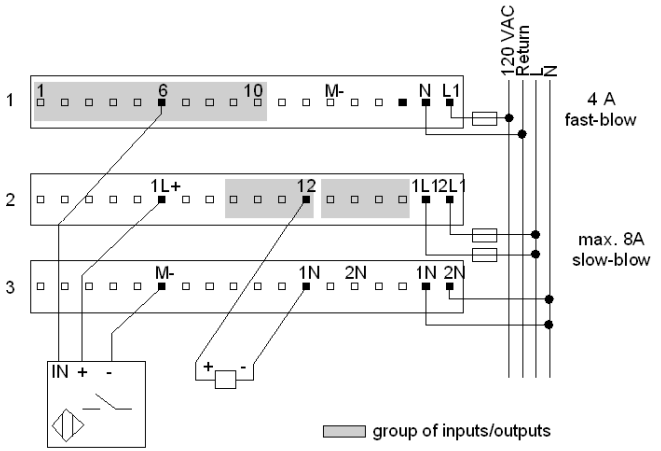

4-Wire Sensor with a 3-Wire Actuator

The diagram below shows field wiring for a 4-wire (24 VDC) sensor and a 3-wire (115 VAC) actuator.

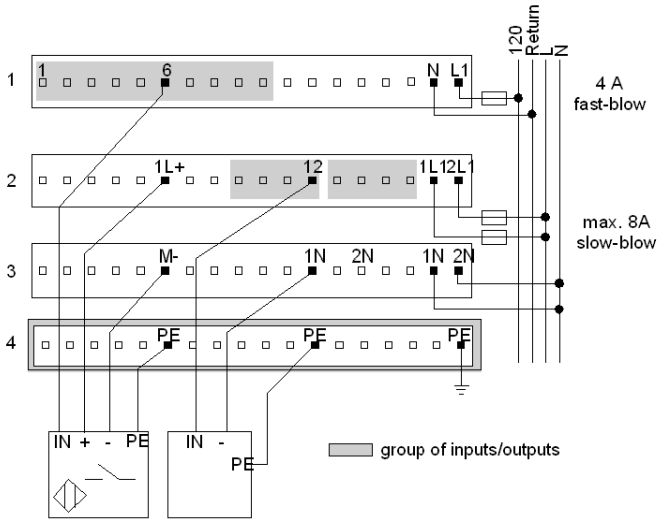

A 1-row busbar is used to provide PE for the 4-wire sensor. No busbar would be required if only 2- and/or 3-wire sensors were used.

Simplified Input Schematics

The following diagram shows the field-side input circuitry.

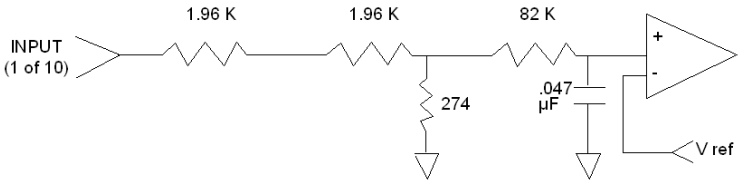

Simplified Output Schematics

The following diagram shows the field-side output circuitry.

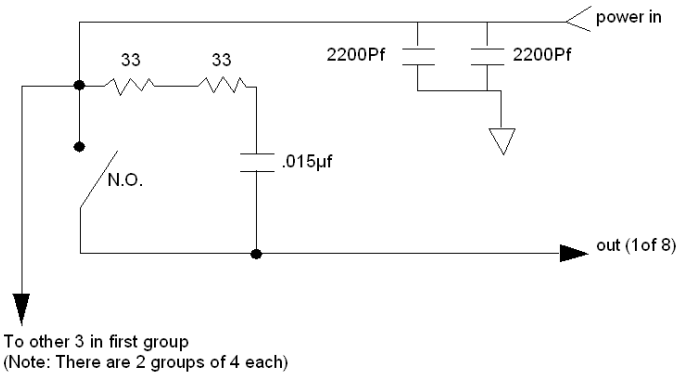

I/O Mapping

Overview

The 170 ARM 370 30 TSX Momentum I/O base supports 10 discrete inputs and 8 relay outputs. This section contains information about the mapping of the I/O data into input words and output words.

I/O Map

The I/O base must be mapped as one input word and one output word, or as 10 discrete inputs and 8 discrete outputs.

IEC vs. Ladder Logic

In order to correctly field wire the inputs/outputs and map the input/output data, you need to know which type of Momentum Adapter is mounted on the base .

Adapters may be either IEC compliant or 984 Ladder Logic compliant.

	IEC Compliant	**984 Ladder Logic Compliant**
Momentum Processor Adapters	All	None
Momentum Communication Adapters	All, except 170 NEF 110 21 170 NEF 160 21 170 FNT110 00 170 FNT 110 01	170 NEF 110 21 170 NEF 160 21 170 FNT 110 00 170 FNT 110 01

Data Mapping

The figure below shows how data is mapped with an IEC Compliant Adapter. When the I/O is mapped as a discrete input point (1x) the MSB is assigned to Pin 1. When mapped as a discrete output (0x) the MSB is assigned to Pin 9. When the I/O is mapped as an input word/register (3x) the LSB is assigned to Pin 1.When mapped as an output word/register, the LSB is assigned to Pin 9.

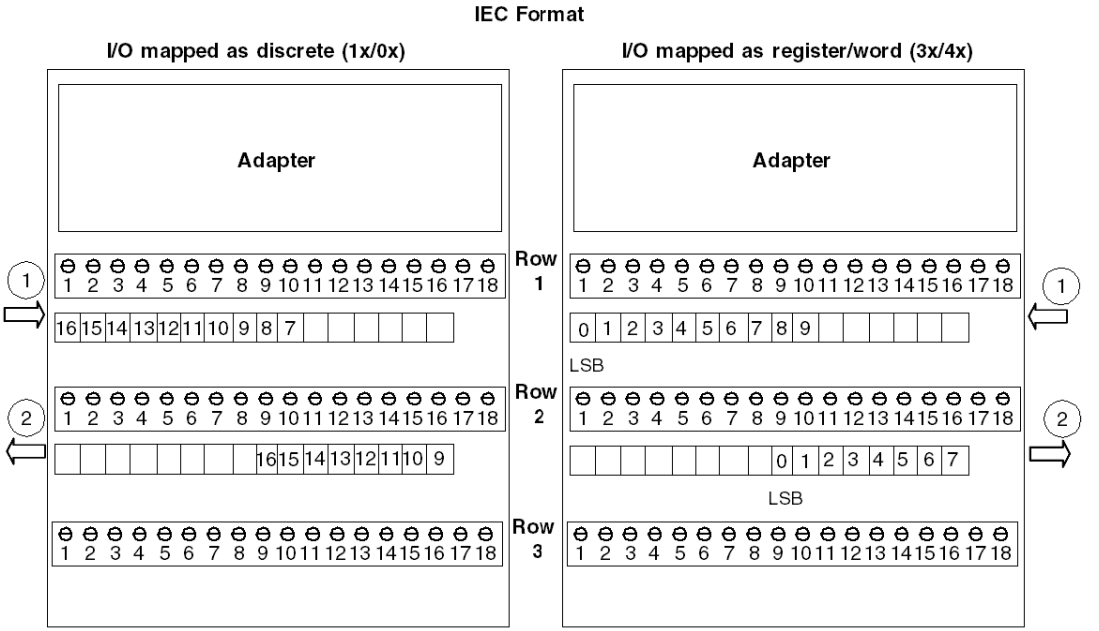

1 inputs
2 outputs

The figure below shows how data is mapped with a Ladder Logic Compliant Adapter. When the I/O is mapped as discrete input points (0x) the LSB is assigned to Pin 1. When mapped as a discrete output points, the LSB is assigned to Pin 9. When the I/O is mapped as an input word/register (3x) the MSB is assigned to Pin 1. When mapped as an output word/register (4x) , the MSB is assigned to Pin 9.

984 Format

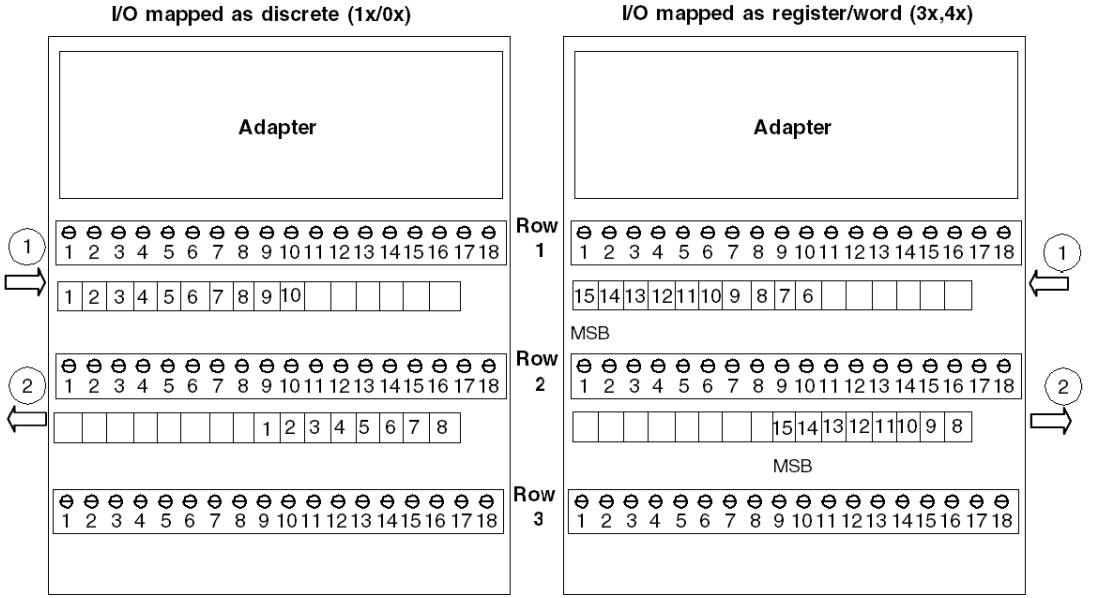

1 inputs
2 outputs

170 CPS 111 00 TIO Power Supply Module

38

Overview

This chapter describes the 170 CPS 111 00 TIO power supply module. The module provides a regulated output voltage with protection against overload and overvoltage. It can be used to power TSX Momentum I/O bases.

What's in this Chapter?

This chapter contains the following topics:

Topic	Page
Front Panel Components	652
Specifications	654
Terminal Connectors	658
External Operating Voltage Connections	660

Front Panel Components

Overview

This section contains an illustration of the front panel of the 170 CPS 111 00 Power Supply and a description of the LEDs.

Front Panel Illustration

The front panel of the power supply module is shown in the illustration below.

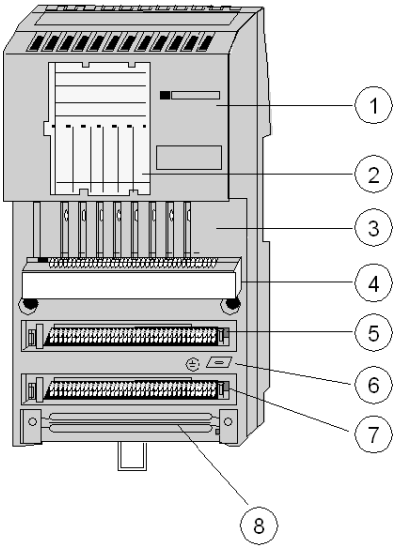

Components of the power supply module

Label	Description
1	Module identifier
2	Identification label
3	LED status display
4	Protective cover
5	Input voltage (AC) terminal strip connector mounting slot
6	PE spade-lug connector
7	Output voltage (DC) terminal strip connector mounting slot
8	Grounding busbar connector mounting slot

LED Illustration

This Module has one LED which is shown in the illustration below.

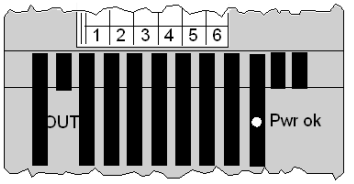

LED Descriptions

The Pwr OK LED is described in the table below.

Indicator	Condition	Message
Pwr ok	Green	Power supply module is ready
	Off	Power supply module not ready

Specifications

Overview

This section contains specifications for the 170 CPS 111 00 power supply module.

General Specifications

Module type	Power Supply
Nominal Input voltage	230 VAC or 120 VAC (jumper selectable)
Nominal Output voltage	24 VDC
Maximum Output Current (isolated)	0.7 A

Protective Circuitry

Inputs	Self-restoring fuse
Outputs	Overvoltage protection: limited by a transzorb diode (type: SM6T30A)
	Overload protection: by thermal current limiting (should the thermal current limiting respond, the input voltage must be switched -- off/on for reactivation).

Power

Frequency	
Input voltage	50/60 Hz + 5%
Internal chopper frequency	90 ... 110 kHz
Power	
Efficiency	Typically 0.76 for IA = 0.7 A
Apparent power	Typically 32 VA for IA = 0.7 A
Effective power	Typically 21 W for IA = 0.7 A

Isolation

Input/Output voltage	L, N, PE isolated from UB, M
Between base supply and ground	500 VDC, 1 min
Between input channels and ground	500 VDC, 1 min

Fuses

Internal (not user-replaceable)	Internal self-restoring fuse
External	Min external F1: for 230 VAC, 0.315 A, slow-blow Min external F1: for 120 VAC, 0.63 A, slow-blow

Fault Information

Inputs	None
Outputs	Green status LED for output voltage ok

Physical Dimensions

Width	74.2 mm
Depth	40 mm
Length	141.5 mm

Environmental Conditions

Regulations	VDE 0160, UL 508
Permissable operating and ambient temperatures	GUF (-40 ... +60 deg. C) adhering to DIN 40040, refer to the derating curve for uninhibited convection, operation orientation is vertical
Permissable storage temperature	-40 ... +85 deg. C
Internal power dissipation	Roughly 1.2 + 5 x IA (in W, IA in A)
Noise immunity	EN 50081-2
Safety classification	Class 1 (VDE 0160, IEC 1131-2)

AC Input Voltage

Selectable by jumper

Input Voltage	
EX - EY not jumpered	L/N = 230 VAC
EX - EY jumpered	L/N = 120 VAC
Limiting Values	
With jumper	100 Veff -15% to 120 Veff +10%
Without jumper	230 Veff -15% to 240 Veff +10%
Power Failure	
Half wave loss at	100 Veff -15%
Min. of a half wave at	>= 100 Veff
Min. of a half wave at	230 Veff -15%
Input Current	
For 85 Veff	Typically 0.366 Aeff, IA = 0.7 A
For 170 Veff	Typically 0.188 Aeff, IA = 0.7 A
For 230 Veff	Typically 0.188 Aeff, IA = 0.7 A
Power on Current	
I2T	0.3 A^2s
IT	0.02 As

Power on Surge Current Curve

The following chart shows power on surge current for 120 VAC + 10% or 240 VAC + 10%

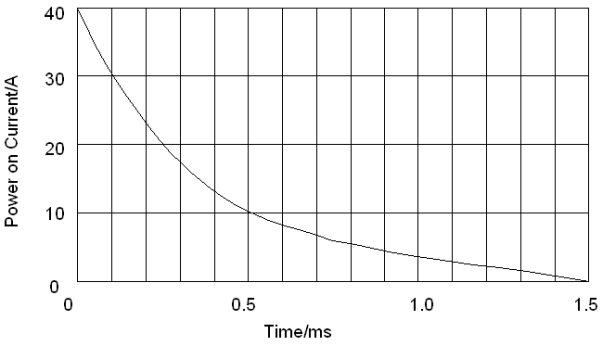

DC Output Voltage

Number	1 x UB = 24 VDC, max. 0.7 A, isolated
Limiting Values	
UBmin	21 VDC
UBmax	30 VDC
Output Current	
IA	0 ... 0.7 A
Output Ripple	
Typical	150 mV/p-p (max. 20 MHz)
Max.	250 mV/p-p (max. 20 MHz) - measured with a 0.1 microF capacitor
Voltage Regulation	Typically +500 mV for 0.7A after 0.35 A Typically -500 mV for 0.35A after 0.7 A

Output Current Chart

The following chart shows output current (derating) for uninhibited vertical convection.

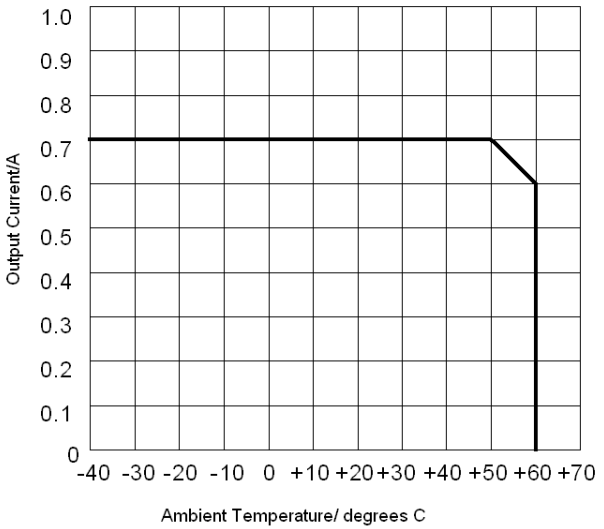

Terminal Connectors

Available Types

Power is supplied to the module through an 8-pole terminal connector. Two types of terminal connectors are available:

- screw-in
- spring-clip

Screw-In Version

Screw-in terminals can be used with cable with a diameter of up to 12 AWG (2.5 mm^2). They come in sets of three. The part number is 170 XTS 011 00.

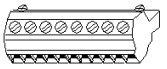

Spring-Clip Version

Spring-clip terminals can be used with cable with a diameter of up to 14 AWG (1.5 mm^2). They come in sets of three. The part number is 170 XTS 012 00.

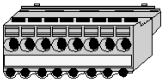

Safety Requirement

This module is used in hazardous and harmless voltage ranges. For safety, code the terminal connectors and the power supply module to prevent inadvertent exchanges of terminal blocks.

Coding Set

To complete the coding described below, order the 170 XCP 200 00 coding set. This set contains coding keys and combs.

Coding Illustration

Install coding keys in the positions shown in the following illustration:

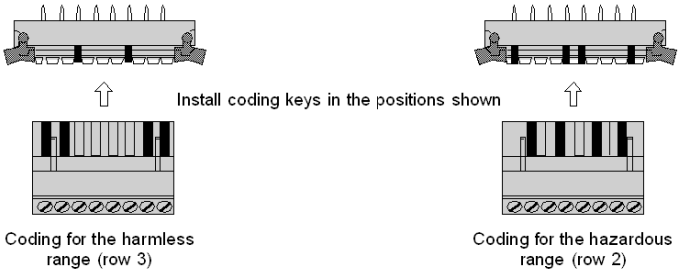

Mounting the Terminal Connectors

To mount a terminal connector, press it into the module's pin connector.

Mounting the Terminal Connectors

⚠ DANGER

RISK OF ELECTRIC SHOCK

Only mount and remove terminal connectors when the module is not under power.

Failure to follow these instructions will result in death or serious injury.

To remove a terminal connector, press both extractors, as shown in the illustration below:

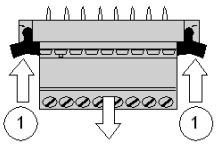

External Operating Voltage Connections

Overview

This section contains a illustration of the external operating voltage connections and explanatory notes.

Illustration

The following illustration shows the external operating voltage connections for the 170 CPS 111 00 Power Supply module:

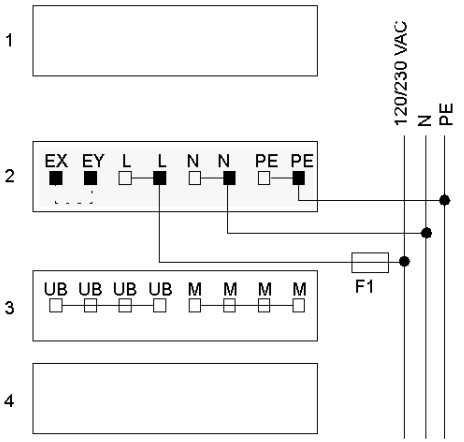

Row	Terminal	Connection	Function
2	1	EX	Jumper connection
2	2	EY	Jumper connection
2	3, 4	L	AC input voltage, line
2	5, 6	N	AC input voltage, neutral
2	7, 8	PE	Earth ground
3	1, 2, 3, 4	UB	DC output voltage
3	5, 6, 7, 8	M	DC output voltage return

Grounding

The spade-lug connector on the front of the module provides a short, secure PE grounding surface.

Electrical safety

Power supply modules may not be operated in parallel. Physically separate input cabling from output cabling.

Fusing

Dimension the F1 fuse to match the operative load, observing the minimum values in the following table:

Voltage	Jumper Placement	External Fusing (min. F1)
120 VAC	Mounted	0.63 A slow-blow
230 VAC	Removed	0.315 A slow-blow

Appendices

Overview

The appendices contain general information common to the Momentum I/O bases.

What's in this Appendix?

The appendix contains the following chapters:

Chapter	Chapter Name	Page
A	System Specifications	665
B	Interference Suppression	671
C	IEC 1131 Input Types	673
D	Field Wire Length	675
E	IEC Symbols	677

System Specifications

A

Overview

This appendix provides system specifications for all TSX Momentum I/O bases.

What's in this Chapter?

This chapter contains the following topics:

Topic	Page
Power Supply Specifications	666
Field Device Interfaces	667
Environmental Specifications	668

Power Supply Specifications

Overview

This section contains power supply specifications for the following types of TSX Momentum I/O bases:

- 24 VDC
- AC voltages

24 VDC

Power supply specifications for 24 VDC modules are contained in the table below.

Operating voltage (internal logic)	20 ... 24 ... 30 VDC
Input voltage (discrete inputs)	20 ... 24 ... 30 VDC
Output voltage for electronic outputs	20 ... 24 ... 30 VDC
Output voltage for relay outputs	24 ... 115 VDC
Ripple	max. 5 % effective, corresp. to relat. total oscillation amplitude per DIN 40 110 (unfiltered three-phase bridge permissible)
Periodic peak values (including ripple)	18 ... 33 VDC
Nonperiodic peak values	max. 35 V at t <500 ms max. 45 V at t <10 ms
Line power dropout	max. 1 ms, repetition rate 1 s

AC Voltages

Power supply specifications for AC voltage modules are contained in the table below.

Operating voltage (internal logic)	100 ... 115 ... 132 VAC, 47 ... 63 Hz
Input voltage (discrete inputs)	85 ... 115 ... 132 VAC, 47 ... 63 Hz
Output voltage for electronic outputs	20 ... 115 ... 132 VAC, 47 ... 63 Hz
Output voltage for relay outputs	24 ... 230 VAC
Line power dropout	max. 10 ms or 1 half-wave, repetition rate 1s

Field Device Interfaces

Overview

This section contains specifications for:

- operating thresholds, input current
- discrete outputs
- relay outputs

Operating Thresholds, Input Current

The table below contains specifcations for operating thresholds, input current.

Rated voltage	24 VDC	115 VAC
Signal level of "1"-signal	+11 ... +30 VDC	74 ... 132 VAC
Signal level of "0"-signal	-3 ... +5 VDC	0 ... 20 VAC
Minimum ON-voltage	min. 2.5 mA, 6 mA at 24 VDC	min. 6 mA
Maximum OFF-voltage	max. 1.2 mA	max. 2.6 mA
Input delay	0 -> 1: 2.2 ms 1 -> 0: 3.3 ms	< 1 half-wave

Discrete Outputs

The table below contains specifications for discrete outputs.

Rated voltage	24 VDC	115 VAC	230 VAC
Voltage drop on "1"-Signal	max. 0.5 V	max. 1.5 V	max. 1.5 V
Leakage current on "0"-Signal	max. 1 mA	max. 1.3 mA	-
Load current per output	max. 500 mA 2 A at ADM 370 10	30 ... 500 mA	-
Simultaneity factor	100 %	100 %	100 %
Operating delay	3 ms	< 1 half-wave	-

Relay Outputs

The table below contains specifications for relay outputs.

Rated voltage	24 ... 230 VAC 20 ... 115 VDC
Relay type	Normally open (NO) contact
Rated current per output	0.5 ... 2 A, depending on operating voltage and power factor

Environmental Specifications

Overview

All Momentum I/O bases share the following environmental specifications.

General

The table below contains general environmental specifications:

Safety Class	Class 1, IEC 536
Safety Type	IEC 529: IP20
Temperature range (operating)	0 ... +60 oC air intake temperature (without forced ventilation). Under more difficult ventilation conditions, power dissipation must be taken into account (refer to the module descriptions).
Temperature range (storage)	-40 ... +85 oC (without battery) -40 ... +70 oC (with battery)
Relative humidity	95 % continuous for 30 days 75 % annual average, noncondensing
Atmospheric pressure (operating)	>=700 hPa (700 mbar)
Atmospheric pressure (transport)	>=230 hPa (230 mbar)
Pollutants	Maximum at 60% relative humidity, noncondensing S02 <= 0.5 ml/m^3 H2S <= 0.1 ml/m^3
Shock	15 g at 147 m/s2 for 11 ms Three shocks/axis per IEC 68.2-6EC
Vibration	10...57 Hz @ 0.075mm d.a.57...150Hz @ 1 g per IEC 68.2-27EA
Dielectric strength	Conforms to IEC 664
Norms and Standards	CE, UL, CSA, FM
Equipment definition	Open equipment (IEC 1131-2)

Noise Immunity

The tables below contain specifications for noise immunity to line-conducted phenomena.

Circuits	RatedVoltage	Fast transients / Burst per IEC61000-4-4
Power mains	24 VDC / 230 VAC	+/-2 kV
BinaryDiscrete inputs	24 VDC 230 VAC	+/-1 kV +/-2 kV
Analog inputs	-	+/-1 kV
Discrete outputs (electronic)	24 VDC	+/-1 kV
Analog outputs	-	+/-1 kV
Relay outputs	24 VDC / 230 VAC	+/-1 kV
Shielded cables	-	+/-1 kV

.

Noise immunity to electrostatic discharge	+/-4 kV for indirect contact discharge
Noise immunity to electromagnetic fields	10 V/m
RFI suppression	Limit curve A

Interference Suppression

B

Interference Suppression

Overview

This section explains the interference suppression properties of TSX Momentum components, guidelines for interference suppression of your system, and recommendations for obtaining permits.

TSX Momentum Components

Under the RF Equipment Act, individual components and individually nonoperational subassemblies are not subject to the mandatory PT&T classification or registration rules.

The components of the TSX Momentum are interference-suppressed to within EN 55011 Limit Curve A.

Your System

Assuming adherence to the configuration guidelines, even a total system constructed from TSX Momentum components typically meets this requirement, if:

- all third-party add-on equipment and components are equally RFI-suppressed
- the operating instructions regarding RF suppression are adhered to, e.g.:
  - filtering the line voltage using RFI filters
  - noise filtering using anti-interference capacitors
  - equipping inductive consumers with clamping diodes (suppressor diodes) to prevent the injection of RF noise potentials into neighboring lines

Permits

In some cases, so-called operating permits may be required. Obtaining the operating permit for the total system from the local RFI control agency is the responsibility of the user. It usually applies to systems operated in residential and mixed-zoning areas, government offices, hospitals and airports, but not within industrial zones.

In the event of any problems with the operating permit or license, consult the system supplier first. In case of doubt, the latter can direct questions to the local distributor.

IEC 1131 Input Types

C

Input Voltage and Current Thresholds

Overview

This section describes the voltage and current thresholds for three types of input, as defined by IEC 1131.

Thresholds

The following table shows the voltage and current thresholds for three input types at 24 VDC, as defined by IEC 1131.

Input Type	On Voltage	On Current	Off Voltage	Off Current
Type 1	+15 ... +30 V	2 ... 15 mA	-3 ... +5 V	... 15 mA
Type 1+	+11 ... +30 V	2.5 ... 10 mA	-3 ... +5 V	... 10 mA
Type 2	+11 ... +30 V	6 ... 30 mA	-3 ... +5 V	... 30 mA

Type 1+

This type is often used for active sensors and relays because the minimum on and maximum off current thresholds are higher.

Field Wire Length

D

Calculating Field Wire Length for AC and DC Devices

Introduction

This section describes some considerations in calculating field wire length.

Effect of IR Drop

The IR drop is the product of the resistance of the wire (depends on wire gauge size) and the current drawn by the load. (IR = volts) After calculating the IR drop of the field wire, what you have left is available at the module input.

Example

The following example shows how to calculate the IR drop to see if enough is left over to turn on an I/O base's input point.

Step	Action
1	Assume an I/O base needs 80 VAC minimum to turn on voltage and assume a field source of 120 VAC.
2	Assume the current drawn by the I/O base is 6 mA.
3	Consult the vendor of the wire to get the resistance of the wire (usually given in Ohms per 1000 feet, this depends on the gauge and length of the wire). For this example, assume the total resistance of the wire length is 1000 Ohms.
4	Calculate .006 A x 1000 Ohms = 6 VAC. This is the IR drop.
5	Calculate 120 VAC - 6 VAC = 114 VAC. This is plenty to turn on the inputs, as the minimum required is 80 VAC.

Empirical Testing Required

The IR drop calculation can only be a rough estimate. Empirical testing is required to fine-tune the wiring length. The result will depend on the following variables:

- shielded vs. unshielded wire
- single vs. wiring pairs
- wire impedance
- electrical noise
- routing of wiring, such as running in parallel with high voltage that can indudce capacitive and inductive coupling of noise spikes

IEC Symbols

E

Glossary of IEC Symbols

Overview

This appendix contains illustrations and definitions of common IEC symbols used in describing TSX Momentum components.

IEC Symbols

Symbol	Definition
.	Actuator/output, e.g. contactor, lamp, valve, heating, etc.
. 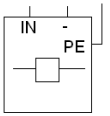	3-wire actuator
.	Digital sensor/input, e.g. contact, switch, initiator, light barrier, etc.
. 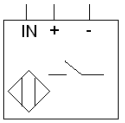	3-wire sensor

Symbol	Definition
. 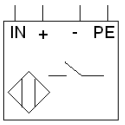	4-wire sensor
.	Change-over break
.	Analog sensor (voltage)
.	Analog sensor (current)
.	Thermocouple Element
.	Resistor, general symbol
.	Fuse
.	Electrolytic Capacitator
.	Earth Ground

Index

0-9

170AAI03000, *79*
170AAI14000, *97*
170AAI52040, *113*
170AAO12000, *139*
170AAO92100, *155*
170ADI34000, *169*
170ADI35000, *183*
170ADI54050, *197*
170ADI74050, *211*
170ADM35010, *225*
170ADM35011, *243*
170ADM35015, *261*
170ADM37010, *275*
170ADM39010, *293*
170ADM39030, *309*
170ADM39031, *325*
170ADM54080, *341*
170ADM69050, *371*
170ADM69051, *387*
170ADM85010, *403*
170ADO34000, *421*
170ADO35000, *435*
170ADO53050, *449*
170ADO54050, *465*
170ADO73050, *481*
170ADO74050, *497*
170ADO83030, *513*
170AMM09000, *527*
170AMM09001, *557*
170ANR12090, *587*
170ANR12091, *611*
170ARM37030, *635*
170CPS11100, *651*

A

adapters
    communication, *28*
    option, *31*
    processor, *29*
assembly
    I/O bases, *37*

B

busbars, *34*

C

circuits
    I/O bases, *63*
components
    I/O bases, *25*

D

dimensions
    I/O bases, *55*

G

grounding guidelines
    I/O bases, *63*

I

IEC symbols, *677*
IEC1131 input types, *673*
interference suppression, *671*

M

mounting instructions
    I/O bases, *55*

P

physical description
    I/O bases, *20*
power guidelines
    I/O bases, *63*

S

system specifications
    I/O bases, *665*

T

terminal connectors, *32*

V

voltage
    I/O bases, *63*

W

wire length, *675*